CUYAHOGA COUNTY
CUY-OLD ROCKSIDE ROAD
REPLACEMENT OF EXISTING BRIDGE 00.42 OVER THE CUYAHOGA RIVER
VILLAGE OF VALLEY VIEW
CITY OF INDEPENDENCE
STATE OF OHIO

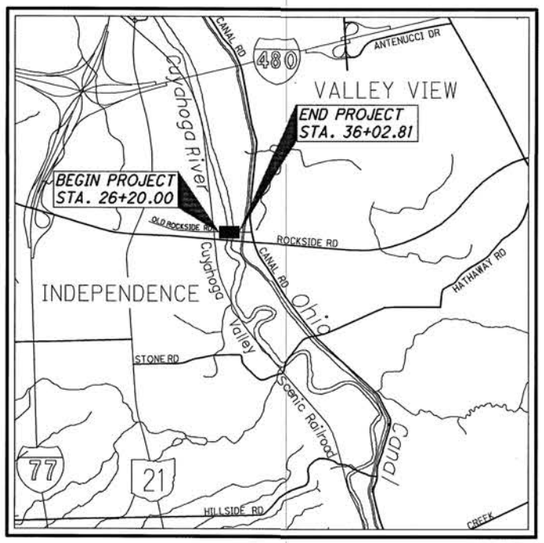

LOCATION MAP

LATITUDE: 41°23'41" N LONGITUDE: 81°37'45" W

SCALE IN MILES
0 1 2 3 4

N

PORTION TO BE IMPROVED
INTERSTATE HIGHWAY
FEDERAL ROUTES
STATE ROUTES
COUNTY & TOWNSHIP ROADS
OTHER ROADS

DESIGN DESIGNATION

CURRENT ADT (2022)	1800
DESIGN YEAR ADT (2042)	1800
DESIGN HOURLY VOLUME (2042)	180
DIRECTIONAL DISTRIBUTION	50
TRUCKS (24 HOUR B&C)	26%
DESIGN SPEED	30
LEGAL SPEED	25
DESIGN FUNCTIONAL CLASSIFICATION: LOCAL ROAD (URBAN)	
NHS PROJECT	NO

DESIGN EXCEPTIONS

NONE

UNDERGROUND UTILITIES

Contact Two Working Days Before You Dig

OHIO811.org Before You Dig

OHIO811, 8-1-1, or 1-800-362-2764
(Non-members must be called directly)

PLAN PREPARED BY:

BURGESS & NIPLE
100 WEST ERIE ST.
PAINESVILLE, OHIO 44077

ENGINEERS SEAL:
FOR STRUCTURES OVER 20' SPAN
STATE OF OHIO JEFFREY A. ACKERMAN E-67745 REGISTERED PROFESSIONAL ENGINEER
SIGNED:
DATE: 09-14-2021

ENGINEERS SEAL:
FOR ENTIRE PLAN EXCEPT STRUCTURES OVER 20' SPAN
STATE OF OHIO JOSHUA T. PENNOCK E88201 REGISTERED PROFESSIONAL ENGINEER
SIGNED:
DATE: 09-14-2021

INDEX OF SHEETS:

TITLE SHEET	1	RETAINING WALL AND BARRIER MOMENT SLAB DETAILS	72-80
SCHEMATIC PLAN	2	STRUCTURES 20' & OVER	
TYPICAL SECTIONS	3-6	TEMPORARY BRIDGE	81-98
GENERAL NOTES	7-13,13A	BRIDGE 00.42	99-142,111A,111B,114A
MAINTENANCE OF TRAFFIC DETAILS	14-36	RIGHT OF WAY	143-157
GENERAL SUMMARY	37-39	SOIL PROFILE	
SUBSUMMARIES	40-45		
PROJECT SITE PLAN	46		
PLAN - OLD ROCKSIDE ROAD	47,50		
PROFILE - OLD ROCKSIDE ROAD	48,51		
PROFILE - CVSR DRIVE	49		
CROSS SECTIONS - OLD ROCKSIDE RD.	52-56		
CROSS SECTIONS - CVSR DRIVE	57-60		
DRIVEWAY PROFILES	61		
RESTORATION PLANS	62-63		
TRAFFIC CONTROL	64-66		
WATER WORK PLANS	67-71		

PROJECT DESCRIPTION

REPLACEMENT OF THE OLD ROCKSIDE ROAD BRIDGE OVER THE CUYAHOGA RIVER. INCLUDES BRIDGE, ROAD, RECONSTRUCTION OF THE APPROACHES AND CONSTRUCTION OF A TEMPORARY BRIDGE.

EARTH DISTURBED AREAS

PROJECT EARTH DISTURBED AREA:	0.75 ACRES
ESTIMATED CONTRACTOR EARTH DISTURBED AREA:	1.04 ACRES
NOTICE OF INTENT EARTH DISTURBED AREA:	1.79 ACRES

2019 SPECIFICATIONS

THE STANDARD SPECIFICATIONS OF THE STATE OF OHIO, DEPARTMENT OF TRANSPORTATION, INCLUDING CHANGES AND SUPPLEMENTAL SPECIFICATIONS LISTED IN THE PROPOSAL SHALL GOVERN THIS IMPROVEMENT.

I HEREBY APPROVE THESE PLANS AND DECLARE THAT THE MAKING OF THIS IMPROVEMENT WILL NOT REQUIRE THE CLOSING TO TRAFFIC OF THE HIGHWAY AND THAT PROVISIONS FOR THE MAINTENANCE AND SAFETY OF TRAFFIC WILL BE AS SET FORTH ON THE PLANS AND ESTIMATES.

SPECIAL PROVISIONS	
WATERWAY PERMIT FOR:	CUY - OLD ROCKSIDE ROAD
U.S. ARMY CORPS OF ENGINEERS PERMIT NO:	NATIONWIDE PERMIT NO. 3 (DA NO. LRH-2021-00124-CUY)
DATE:	09/29/2021

THOMAS P. SOTAK, P.E.
DESIGN AND CONSTRUCTION ADMINISTRATION

APPROVED _____ 09/15/2021
DESIGN AND CONSTRUCTION ADMINISTRATION — DATE

MICHAEL W. DEVER, M.P.A.
DIRECTOR OF PUBLIC WORKS

APPROVED _____ 9/16/21
DIRECTOR OF PUBLIC WORKS — DATE

ARMOND BUDISH
CUYAHOGA COUNTY EXECUTIVE

APPROVED _____ 9-20-21
CUYAHOGA COUNTY EXECUTIVE — DATE

OHIO DEPARTMENT OF TRANSPORTATION STANDARD CONSTRUCTION DRAWINGS

NUMBER	DATE	NUMBER	DATE	NUMBER	DATE	NUMBER	DATE
BP-3.1	1/17/20	RM-1.1	1/15/21	MT-101.70	1/17/20	AS-1-15	7/17/15
BP-3.2	1/18/19			MT-101.75	1/17/20	AS-2-15	1/18/19
BP-4.1	7/19/13	CB-1.1	7/19/19	MT-101.90	7/17/20	BR-2-15	7/17/15
BP-5.1	1/18/19	CB-2.2	1/15/21	MT-102.10	1/17/20	HW-2.1	7/20/18
BP-7.1	7/17/20	CB-2.3	1/15/16	MT-102.20	4/19/19	HW-2.2	7/20/18
		MH-1.1	1/15/16	MT-105.10	1/17/20	GSD-1-19	1/15/21
MGS-1.1	7/21/21	MH-1.2	1/15/16			PCB-91	7/17/20
MGS-2.1	1/19/18	DM-1.2	7/16/21	TC-41.20	10/18/13	SICD-1-96	7/18/14
MGS-3.1	1/19/18	DM-4.2	7/20/12	TC-41.30	10/18/13	SICD-2-14	1/15/21
MGS-3.2	1/18/13	DM-4.3	1/15/16	TC-42.10	10/18/13		
MGS-4.2	7/19/13	DM-4.4	1/15/16	TC-42.20	10/18/13		
MGS-4.3	1/18/13			TC-52.10	10/18/13		
MGS-5.2	7/15/16	MT-97.10	4/19/19	TC-52.20	1/15/21		
MGS-5.3	7/15/16	MT-97.11	1/20/17	TC-61.10	1/17/20		
MGS-6.1	1/19/18	MT-99.20	4/19/19	TC-61.30	7/19/19		
		MT-99.60	7/15/16	TC-71.10	1/19/18		

CUYAHOGA COUNTY ENGINEER CONSTRUCTION DRAWINGS

NUMBER	DATE
BP-4.1C	11/15/17
CB-3C	11/15/17
MD-1C	12/2/19
MD-5C	11/15/17
MH-10C	3/1/21
MH-11C	12/2/19
CP-1C	7/14/16
BR-2-15C	12/7/16
PRF-1C	7/14/16

O.D.O.T. SUPPLEMENTAL SPECIFICATIONS

NUMBER	DATE
800	7/16/21
821	4/20/12
832	10/19/18
846	4/17/15
874	4/17/20
875	1/18/19
895	4/18/14
921	4/20/12
1055	10/19/18

SPECIAL PROVISIONS

SEE SECTION 200 OF THE CUYAHOGA COUNTY ENGINEER SPECIFICATION BOOKLET IN THE BID PACKAGE.

FEDERAL PROJECT NO. E120225
PID NO. 91563
CONSTRUCTION PROJECT NO.
RAILROAD INVOLVEMENT NONE
CUY - OLD ROCKSIDE ROAD
1 / 157

P:\PR57030\Cadd\Sheets\ORR_91563_GT001.dwg 14-Sep-21 2:55 PM

PROJECT CONTROL

Point #	Station/Offset	Northing	Easting	Elevation	Description
BM-1	WEST OF PROJECT	630854.8791	2205310.0490′	638.08′	BENCH TIE LOCATED ON THE SE SIDE OF A PLP
BM-2	WEST OF PROJECT	630739.0167′	2205707.2430′	610.99′	SOUTH SIDE OF TPP
BM-3	WEST OF PROJECT	630666.9260′	2206019.9870′	607.40′	BENCHTIE IN TPP
BM-4	22+63.36, 24.68′ LT.	630716.6359′	2206562.7280′	601.31′	SOUTH SIDE OF TPP
BM-5	29+34.76, 19.96′ LT.	630756.9954′	2207232.9340′	602.05′	BENCHTIE IN TPP
BM-6	35+33.38, 27.23′ LT.	630804.4412′	2207829.7210′	605.18′	BENCHTIE IN TLP 803301
BM-7	37+62.58, 35.50′ RT.	630757.1974′	2208062.5820′	604.99′	BENCHTIE IN TLP 678808
BM-8	WEST OF PROJECT	630575.5425′	2204888.2730′	704.03′	NORTH EAST SIDE GUY POLE
BM-9	WEST OF PROJECT	630657.1686′	2204457.3590′	726.05′	SOUTH SIDE OF TPP

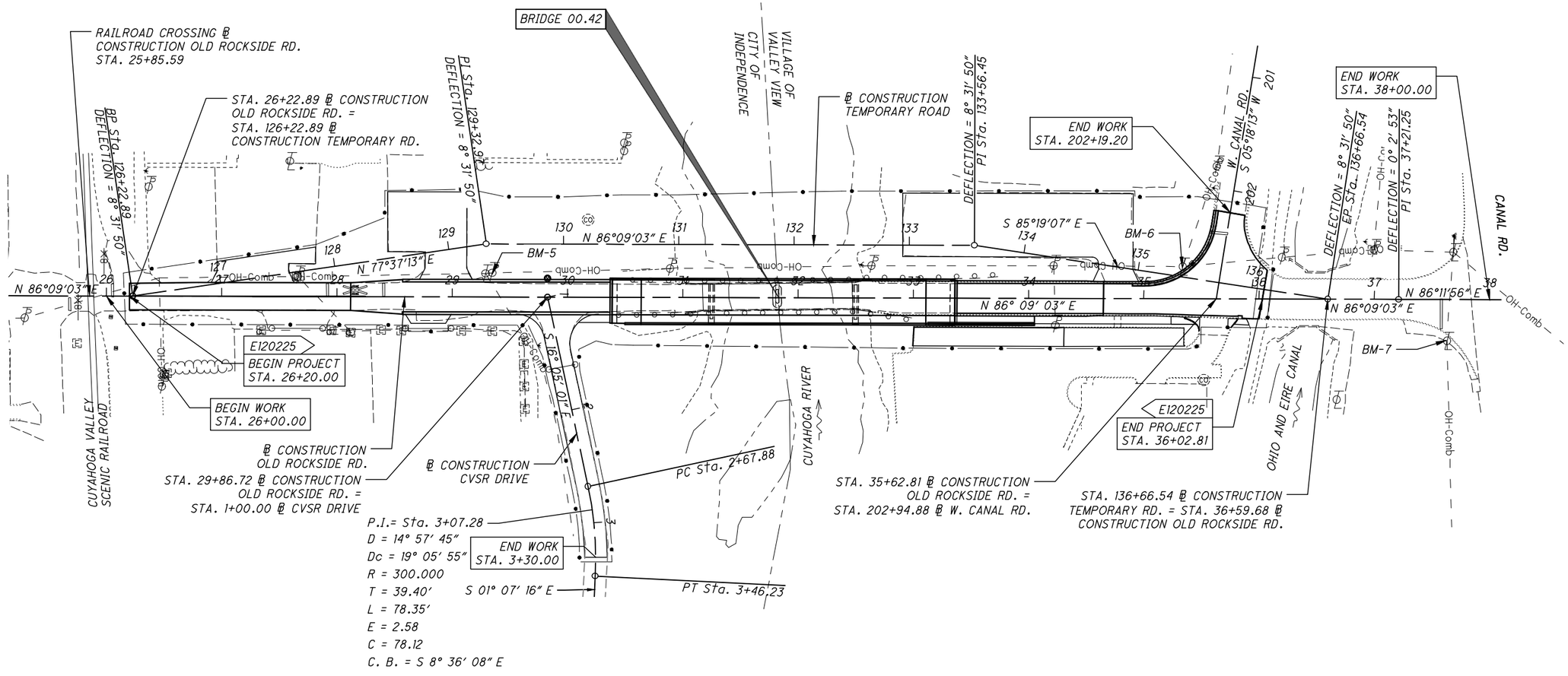

HORIZONTAL SCALE IN FEET
0 25 50 100

CALCULATED VLE
CHECKED JTP

SCHEMATIC PLAN

CUY - OLD ROCKSIDE ROAD

P:\PR57030\Cadd\Sheets\ORR_91563_GB001.dwg 02-Sep-21 5:51 PM

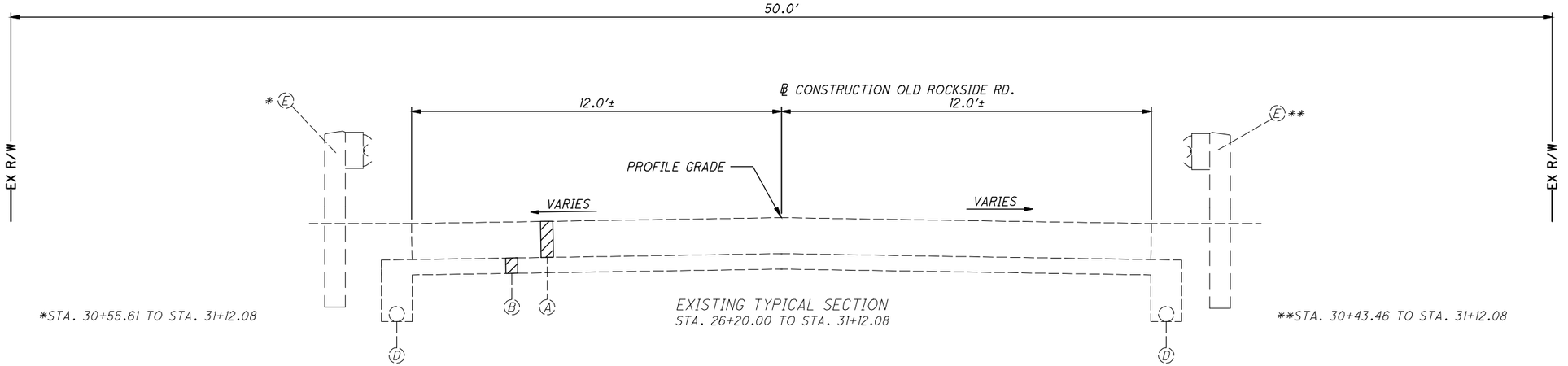

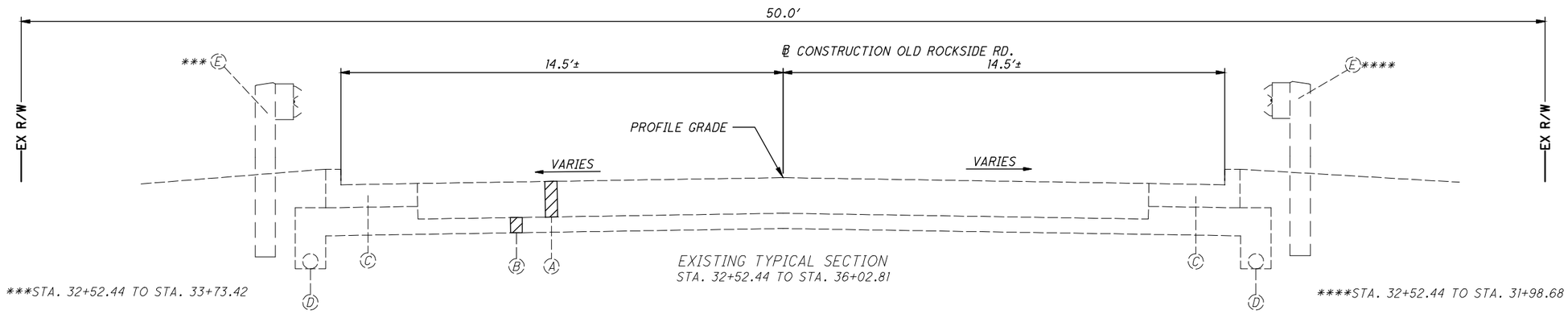

LEGEND

- Ⓐ ASPHALT CONCRETE PAVEMENT, THICKNESS VARIES 8" - 16"
- Ⓑ AGGREGATE BASE, THICKNESS VARIES 4" - 12"
- Ⓒ CONCRETE CURB AND GUTTER
- Ⓓ EXISTING UNDERDRAINS
- Ⓔ EXISTING GUARDRAIL

CALCULATED JMS
CHECKED JTP

EXISTING TYPICAL SECTION

CUY - OLD ROCKSIDE ROAD

P:\PR57030\Cadd\Sheets\ORR_91563_GY001.dwg 02-Sep-21 5:51 PM

LEGEND

1. ITEM 441 - 1.25" ASPHALT CONCRETE SURFACE COURSE, TYPE 1, (448), PG70-22M, AS PER PLAN
2. ITEM 441 - 1.75" ASPHALT CONCRETE INTERMEDIATE COURSE, TYPE 2 (448), PG64-22 AS PER PLAN
3. ITEM 302 - 10" ASPHALT CONCRETE BASE, PG64-22 (PLACED IN 2 - 5" LIFTS), AS PER PLAN
4. ITEM 304 - 6" AGGREGATE BASE, AS PER PLAN
5. ITEM 407 - NON-TRACKING TACK COAT
6. ITEM 609 - COMBINATION CURB AND GUTTER, TYPE 2, AS PER PLAN A (THICKNESS = 9")
7. ITEM 609 - COMBINATION CURB AND GUTTER, TYPE 2, AS PER PLAN B (THICKNESS = 9")
8. ITEM 659 - SEEDING AND MULCHING, AS PER PLAN (SEE GENERAL NOTE)
9. ITEM 608 - 4" CONCRETE WALK, AS PER PLAN
10. ITEM 511 - CLASS QC2 CONCRETE, MISC: BARRIER MOMENT SLABS
11. ITEM SPECIAL - RETAINING WALL, MISC: RETAINING WALL
12. ITEM 254 - PAVEMENT PLANING ASPHALT CONCRETE, AS PER PLAN, 3"
13. ITEM 605 - 6" BASE PIPE UNDERDRAINS WITH GEOTEXTILE FABRIC, AS PER PLAN
14. ITEM 204 - SUBGRADE COMPACTION
15. ITEM 302 - 4" ASPHALT CONCRETE BASE, PG64-22, AS PER PLAN
16. ITEM 526 - REINFORCED CONCRETE APPROACH SLAB (T=15"), AS PER PLAN
17. ITEM 606 - GUARDRAIL, TYPE MGS (SEE PLAN SHEETS FOR LOCATION)
18. ITEM 609 - CURB, TYPE 4-C, AS PER PLAN

℄ CONSTRUCTION OLD ROCKSIDE RD.

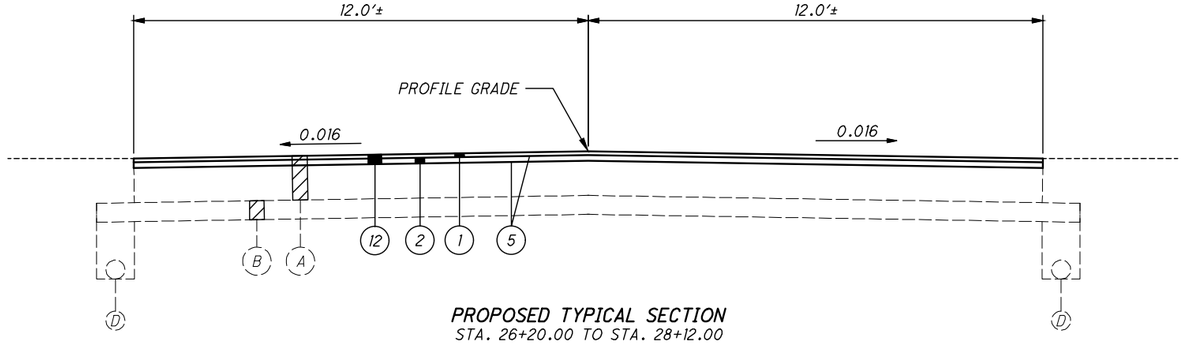

PROPOSED TYPICAL SECTION
STA. 26+20.00 TO STA. 28+12.00

[A] SEE CROSS SECTIONS FOR GRADING, SHEETS 52 TO 56.

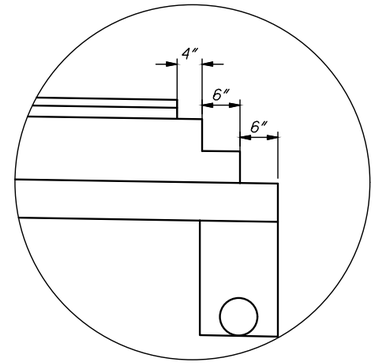

PAVEMENT STEP DETAIL

℄ CONSTRUCTION OLD ROCKSIDE RD.

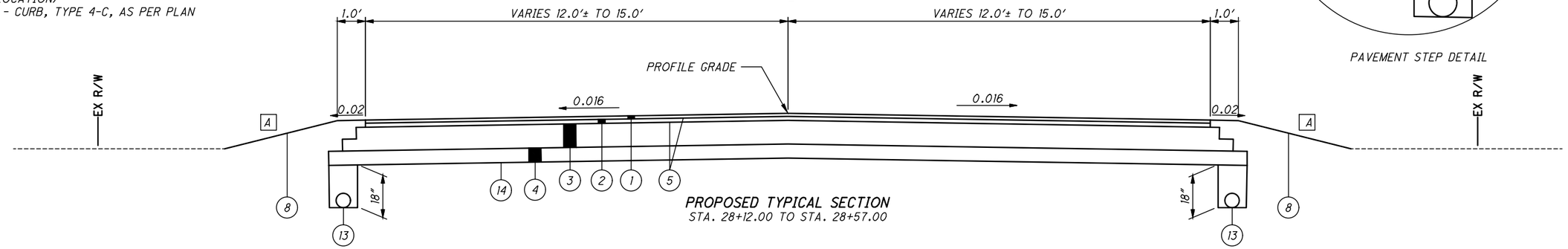

PROPOSED TYPICAL SECTION
STA. 28+12.00 TO STA. 28+57.00

(A) ASPHALT CONCRETE PAVEMENT, THICKNESS VARIES 8" - 16"
(B) AGGREGATE BASE, THICKNESS VARIES 4" - 12"
(C) CONCRETE CURB AND GUTTER
(D) EXISTING UNDERDRAINS

℄ CONSTRUCTION OLD ROCKSIDE RD.

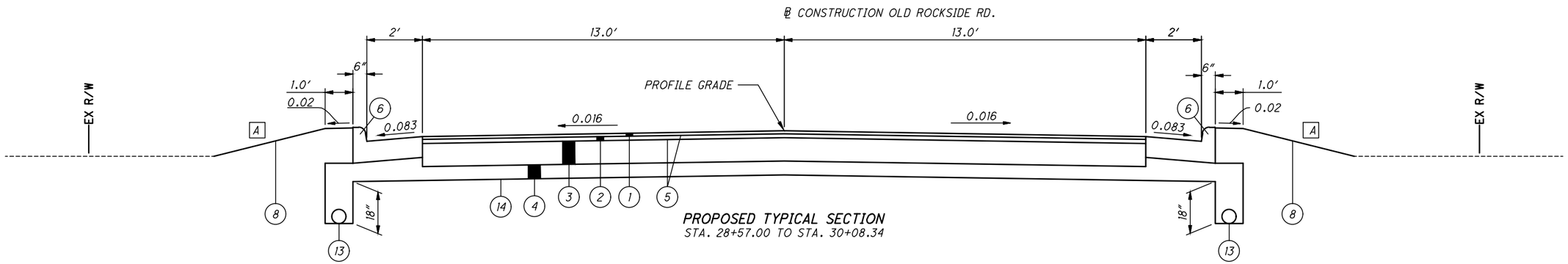

PROPOSED TYPICAL SECTION
STA. 28+57.00 TO STA. 30+08.34

CALCULATED JMS
CHECKED JTP

PROPOSED TYPICAL SECTIONS

CUY - OLD ROCKSIDE ROAD

P:\PR57030\Cadd\Sheets\ORR_91563_GY002.dwg 02-Sep-21 5:52 PM

NOTE:
1. FOR LEGEND SEE SHEET 4.
2. FOR RETAINING WALL AND BARRIER MOMENT SLAB DETAILS, SEE SHEETS 76 AND 79

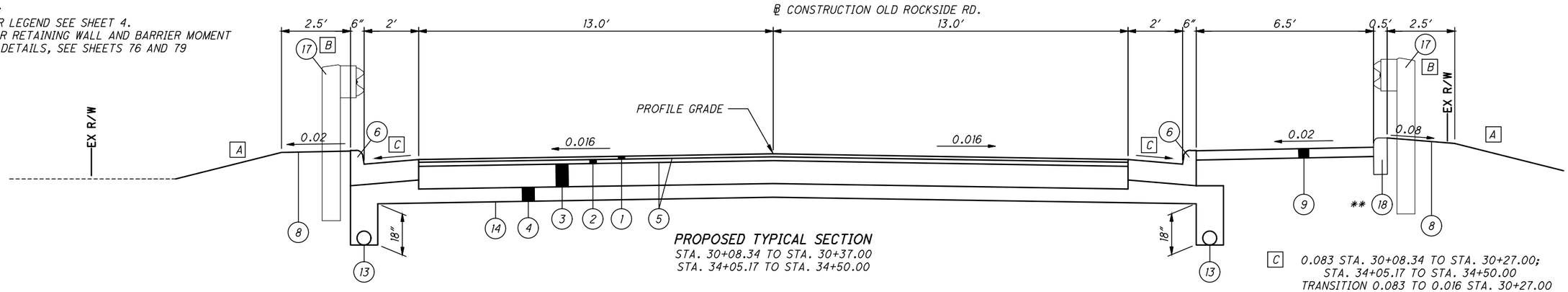

PROPOSED TYPICAL SECTION
STA. 30+08.34 TO STA. 30+37.00
STA. 34+05.17 TO STA. 34+50.00

C 0.083 STA. 30+08.34 TO STA. 30+27.00;
STA. 34+05.17 TO STA. 34+50.00
TRANSITION 0.083 TO 0.016 STA. 30+27.00
TO STA. 30+37.00

** STA. 30+08.34 TO STA. 30+37.00

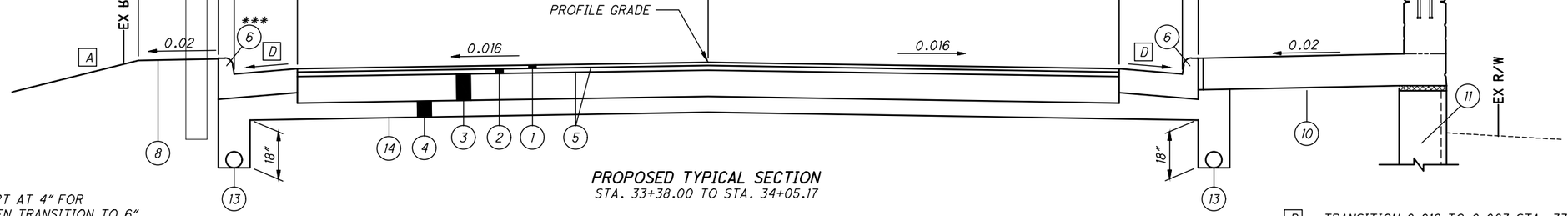

PROPOSED TYPICAL SECTION
STA. 33+38.00 TO STA. 34+05.17

*** CURB HEIGHT SHALL START AT 4″ FOR
A LENGTH OF 17′ AND THEN TRANSITION TO 6″

D TRANSITION 0.016 TO 0.083 STA. 33+38.00
TO STA. 33+48.00
0.083 STA. 33+48.00 TO STA. 34+05.17

A SEE CROSS SECTIONS FOR
GRADING, SHEETS 52 TO 56.

B SEE CROSS SECTIONS FOR
GUARDRAIL LOCATIONS,
SHEETS 52 TO 56.

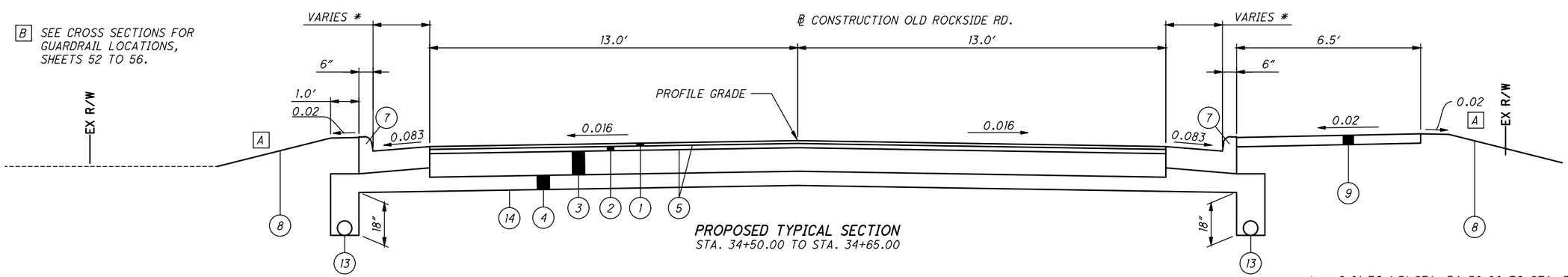

PROPOSED TYPICAL SECTION
STA. 34+50.00 TO STA. 34+65.00

* 2.0′ TO 1.5′ STA. 34+50.00 TO STA. 34+60.00
1.5′ STA. 34+60.00 TO STA. 34+65.00

CALCULATED VLE
CHECKED JTP

PROPOSED TYPICAL SECTIONS

CUY - OLD
ROCKSIDE ROAD

5
157

P:\PR57030\Cadd\Sheets\ORR_91563_GY003.dwg 02-Sep-21 5:52 PM

NOTE:
FOR LEGEND SEE SHEET 4.

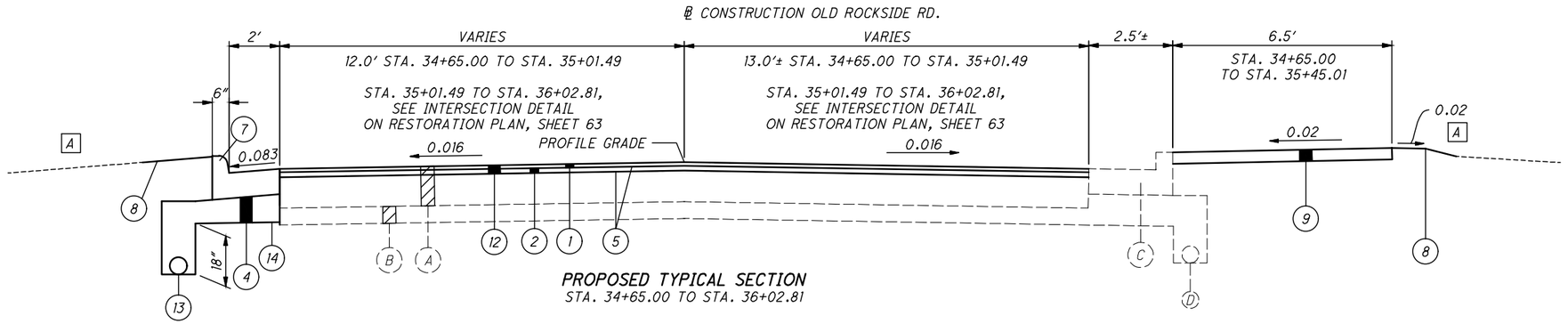

PROPOSED TYPICAL SECTION
STA. 34+65.00 TO STA. 36+02.81

A SEE CROSS SECTIONS FOR GRADING, SHEETS 52 TO 56.

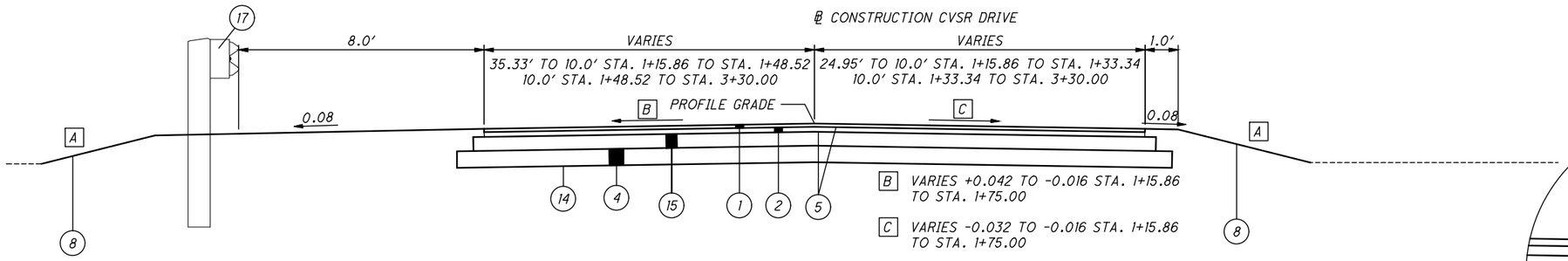

PROPOSED CVSR DRIVE SECTION
STA. 1+15.86 TO STA. 3+30.00

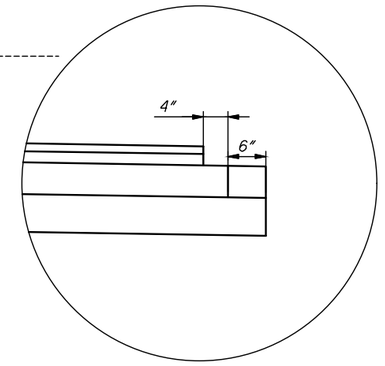

PAVEMENT STEP DETAIL

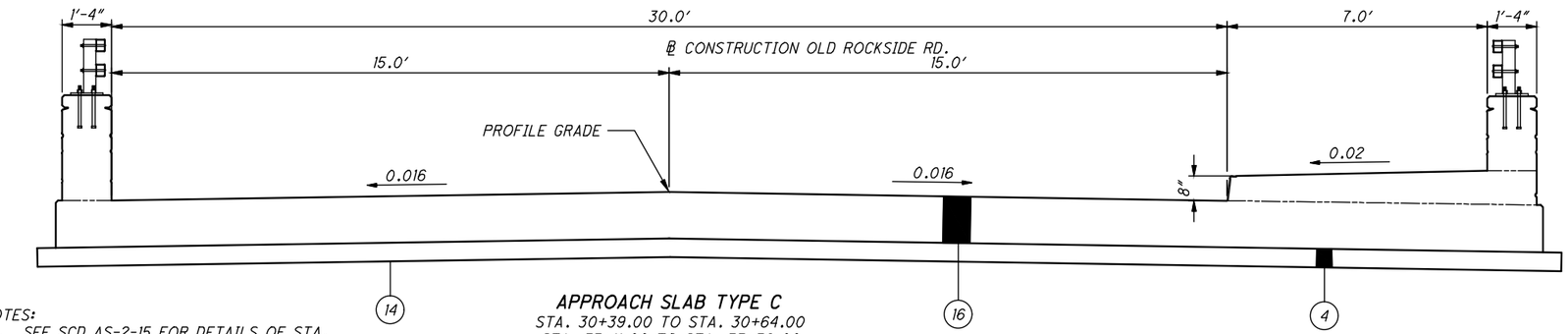

APPROACH SLAB TYPE C
STA. 30+39.00 TO STA. 30+64.00
STA. 33+11.00 TO STA. 33+36.00

NOTES:
1. SEE SCD AS-2-15 FOR DETAILS OF STA. 30+37.00 TO STA. 30+39.00 AND STA. 33+36.00 TO STA. 33+38.00
2. SEE SHEETS 138 AND 140 FOR ADDITIONAL APPROACH SLAB DETAILS.

CALCULATED VLE
CHECKED JTP

PROPOSED TYPICAL SECTIONS

CUY - OLD ROCKSIDE ROAD

P:\PR57030\Cadd\Sheets\ORR_91563_GY004.dwg 02-Sep-21 5:52 PM

CALCULATED VLE
CHECKED JTP

GENERAL NOTES

UTILITIES

LISTED BELOW ARE ALL UTILITIES LOCATED WITHIN THE PROJECT CONSTRUCTION LIMITS TOGETHER WITH THEIR RESPECTIVE OWNERS:

AT&T
13630 LORAIN ROAD
CLEVELAND, OH 44111
ATTN: SCOTT KLEBE
216-476-6057

CHARTER COMMUNICATIONS
7 SEVERANCE CIRCLE
CLEVELAND HEIGHTS, OH 44118
ATTN: JOSH CURTIS, PAT SANTOIEMMO

CROWN CASTLE
15565 NEO PARKWAY
GARFIELD HEIGHTS, OH 44128
ATTN: JON TARNOWSKI
614-940-2462

CWD CLEVELAND WATER
1201 LAKESIDE AVENUE
CLEVELAND, OH 44114
ATTN: FRED ROBERTS
216-664-2444 X 75556

DOMINION ENERGY
320 SPRINGSIDE DRIVE, SUITE 320
AKRON, OH 44333
ATTN: BRYAN DAYTON, EVAN DEMPSEY
330-664-2409

EVERSTREAM SOLUTIONS
1228 EUCLID AVENUE, SUITE 250
CLEVELAND, OH 44115
ATTN: ROBERT WOOD
440-728-0542

FIRST ENERGY - CEI
6896 MILLER ROAD, SUITE 101
BRECKSVILLE, OH 44141
ATTN: TED RADER, JOHN ZASSICK
440-546-8738

LEVEL 3, CENTURY LINK
100 S. CINCINNATI AVENUE, SUITE 1200
TULSA, OK 74103
ATTN: KENDALL WILLIAMS - ZETINA
918-547-0547

NORTHEAST OHIO REGIONAL SEWER DISTRICT
3900 EUCLID AVENUE
CLEVELAND, OH 44115
ATTN: MARY MACIEJOWSKI
216-881-6600 X 6466

SUNOCO PIPELINES
524 FRITZTOWN ROAD
SINKING SPRINGS, PA 19608
ATTN: DEB SCHNECK
610-670-3258

MCI - WORLDCOM
120 RAVINE STREET
AKRON, OH 44303
ATTN: AL GUEST
330-253-8267

VILLAGE OF VALLEY VIEW
7979 HUB PARKWAY
VALLEY VIEW, 44125
ATTN: PAUL DEY
216-642-1130 X 104

CITY OF INDEPENDENCE
6800 BRECKSVILLE ROAD
INDEPENDENCE, OH 44131
ATTN: DONALD J. RAMM
216-524-1374

WIDE OPEN WEST (WOW)
105 BLAZE INDUSTRIAL PARKWAY
BEREA, OH 44017
ATTN: LARRY BURRUEL
410-915-9256

WINDSTREAM
205 S. HAMBDEN STREET
CHARDON, OH 44024
ATTN: THOMAS KULKA
440-285-5528

THE LOCATION OF THE UNDERGROUND UTILITIES SHOWN ON THE PLANS ARE AS OBTAINED FROM THE OWNERS AS REQUIRED BY SECTION 153.64 OF THE ORC.

CALL OHIO811 TWO (2) WORKING DAYS BEFORE YOU DIG
TOLL FREE NO. 1-800-362-2764 OR 811

NON-MEMBERS MUST BE CALLED DIRECTLY

DOMINION ENERGY OHIO

IT IS THE CONTRACTOR'S RESPONSIBILITY TO MAINTAIN THE LATERAL AND SUBJACENT SUPPORT OF DOMINION ENERGY'S PIPLINE(S), IN COMPLIANCE TO 29 CFR, PART 1926, SUBPART P, (SAFE EXCAVATION & SHORING). ONE-FOOT MINIMUM VERTICAL AND HORIZONTAL CLEARANCE MUST BE MAINTAINED BETWEEN DOMINION ENERGY OHIO'S (DEO) EXISTING PIPLINE(S) AND ALL OTHER IMPROVEMENTS. EXTREME CARE SHOULD BE TAKEN NOT TO HARM ANY DEO FACILITY (PIPELINES, ETC.) OR APPURTENANCE (PIPE COATING, TRACER WIRE, CATHODIC PROTECTION TEST STATION WIRES & DEVICES, VALVE BOXES, ETC.). DEO FACILITIES MUST BE PROTECTED WITH A TARP DURING BRIDGE CONSTRUCTION. THE CONTRACTOR WILL BE RESPONSIBLE AND LIABLE FOR ENSURING THAT ALL DEO EXISTING FACILITIES, ABOVE AND BELOW GROUND, REMAIN UNDAMAGED, ACCESSIBLE AND IN WORKING ORDER. THE CROSSING OF DEO'S PIPELINE WITH ANOTHER STEEL FACILITY MAY CREATE A POTENTIAL CORROSION ISSUE FOR THE PROPOSED FACILITY AND THE EXISTING DEO FACILITY. PLEASE CONTACT DOMINION ENERGY OHIO'S CORROSION DEPARTMENT: DAVE CUTLIP (330-266-2121), RICK MCDONALD (330-266-2122), OR AL HUMRICHOUSER (330-478-3757).

CONTINGENCY QUANTITIES

THE CONTRACTOR SHALL NOT ORDER MATERIALS OR PERFORM WORK FOR ITEMS DESIGNATED BY PLAN NOTE TO BE USED "AS DIRECTED BY THE ENGINEER" UNLESS AUTHORIZED BY THE ENGINEER. THE ACTUAL WORK LOCATIONS AND QUANTITIES USED FOR SUCH ITEMS SHALL BE INCORPORATED INTO THE FINAL SUBSIDIARY AGREEMENT GOVERNING COMPLETION OF THIS PROJECT.

ELEVATION DATUM AND SURVEYING PARAMETERS

USE THE FOLLOWING VERTICAL AND HORIZONTAL POSITIONING PARAMETERS FOR ALL SURVEYING:

HORIZONTAL COORDINATES ARE TO BE PROJECT GROUND COORDINATES EXPRESSED IN U.S. SURVEY FEET BASED ON THE OHIO STATE PLANE COORDINATE SYSTEM, NORTH ZONE AND REFERENCE THE NORTH AMERICAN DATUM OF 1983 (NAD83) AND THE 2011 CORS ADJUSTMENT. THE COMBINED SCALE FACTOR IS TO BE INCLUDED WITH THE PROJECT CONTROL INFORMATION FOR THE PROJECT.

VERTICAL CONTROL IS TO BE BASED ON THE NORTH AMERICAN VERTICAL DATUM OF 1988 (NAVD 88).

VERTICAL POSITIONING

ORTHOMETRIC HEIGHT DATUM:	NAVD 88
GEOID:	G12B

HORIZONTAL POSITIONING

REFERENCE FRAME:	NAD 83 (CONUS)(MOL)
ELLIPSOID:	GRS 80
MAP PROJECTION:	LAMBERT CONFORMAL CONIC
COORDINATE SYSTEM:	OHIO STATE PLANE - NORTH ZONE
COMBINED SCALE FACTOR:	1.0000744100 (GRID TO GROUND)
ORIGIN OF SYSTEM:	(0,0)

WORK LIMITS

THE WORK LIMITS SHOWN ON THESE PLANS ARE FOR PHYSICAL CONSTRUCTION ONLY. THE INSTALLATION, AND OPERATION (INCLUDING ERECTION, MAINTENANCE AND REMOVAL) OF ALL WORK ZONE TRAFFIC CONTROL AND WORK ZONE TRAFFIC CONTROL DEVICES REQUIRED BY THESE PLANS, EXCEPT WHERE OTHERWISE NOTED, SHALL BE PROVIDED BY THE CONTRACTOR WHETHER INSIDE OR OUTSIDE THESE WORK LIMITS.

EXISTING TYPICAL SECTIONS

EXISTING TYPICAL SECTIONS HAVE BEEN DEVELOPED FROM SITE MEASUREMENTS, PAVEMENT CORES AND RECORD PLANS AND ARE BELIEVED TO REPRESENT THE WIDTH AND COMPOSITION OF THE EXISTING PAVEMENT, BUT THE COUNTY DOES NOT GUARANTEE THE ACCURACY OF SAME.

ITEM 619 - FIELD OFFICE, TYPE C, AS PER PLAN

THE FIELD OFFICE SHALL, IN ADDITION TO THE ITEMS LISTED IN ITEM 619, BE FURNISHED WITH TWO CELLULAR TELEPHONES.

THE CONTRACTOR'S INSURANCE SHALL INCLUDE A RIDER FOR COVERAGE OVER ANY CUYAHOGA COUNTY PROPERTY INSIDE THE FIELD OFFICE WHICH MAY BECOME DAMAGED OR STOLEN.

THE FOLLOWING QUANTITY HAS BEEN PROVIDED IN THE GENERAL SUMMARY FOR THIS ITEM:

ITEM 619 - FIELD OFFICE, TYPE C, AS PER PLAN 20 MNTH

LOCAL LAWS, ORDINANCES AND REGULATIONS

IN ACCORDANCE WITH SECTION 107.01 OF THE GENERAL PROVISIONS, THE CONTRACTOR SHALL STAY FULLY INFORMED OF ALL LOCAL LAWS, ORDINANCES, REGULATIONS, ORDERS AND DECREES THAT AFFECT THE WORK. IT IS THE CONTRACTOR'S RESPONSIBILITY TO OBSERVE AND COMPLY WITH ALL SUCH LAWS, ORDINANCES, REGULATIONS, ORDERS AND DECREES AT NO ADDITIONAL COST TO THE PROJECT/COUNTY.

ADJUSTMENTS IN CONTRACT TIME

TIME EXTENSIONS WILL ONLY BE CONSIDERED WHEN CONTROLLING ITEMS OF WORK ON THE APPROVED PROGRESS SCHEDULE ARE AFFECTED DUE TO NO FAULT OF THE CONTRACTOR.

WHEN ADDITIONAL WORK IS REQUIRED, TIME EXTENSIONS WILL ONLY BE GRANTED FOR CONTROLLING ITEMS ON THE PROGRESS SCHEDULE (SEE SECTION 108.06 OF THE CUYAHOGA COUNTY ENGINEER'S GENERAL PROVISIONS).

PROJECT PROGRESS MEETINGS

PROGRESS MEETINGS WILL BE HELD EVERY FOUR (4) WEEKS AT THE PROJECT OFFICE OR OTHER LOCATION DESIGNATED BY THE AREA CONSTRUCTION ENGINEER, AND WILL BE ATTENDED BY COUNTY AND CONTRACTOR DECISION-MAKING PERSONNEL.

THE PURPOSE OF THESE MEETINGS IS TO DISCUSS CRITICAL OPERATIONS AND POTENTIAL PROBLEMS. ALSO, THE CONTRACTOR WILL CONFIRM THE NUMBER AND DURATION OF WORK SHIFTS, NUMBER OF WORK CREWS, AND SPECIFIC PORTIONS OF THE WORK TO BE PERFORMED DURING THE FOLLOWING WEEKS.

THESE MEETINGS CAN ONLY BE WAIVED BY THE AREA CONSTRUCTION ENGINEER.

FLOODPLAIN PERMIT

FLOODPLAIN PERMIT SHALL BE POSTED IN A CONSPICUOUS LOCATION, SUCH AS AT THE FIELD OFFICE OR ON THE PROJECT BULLETIN BOARD, FOR THE DURATION OF THE PROJECT.

DEFINITIONS AND TERMS

WHEREVER THERE APPEARS, IN THE STANDARD SPECIFICATIONS (ODOT ITEMIZED CMS), SUPPLEMENTAL SPECIFICATIONS OR PROPOSAL NOTES, THE TERM "THE STATE", "DIRECTOR OF TRANSPORTATION", "DEPARTMENT", "DISTRICT CONSTRUCTION ENGINEER/DISTRICT CONSTRUCTION ADMINISTRATOR (DCA)", "ENGINEER", OR ANY OTHER TERM DESIGNATING ANY REPRESENTATIVE OR EMPLOYEE OF THE STATE OR ITS DEPARTMENT OF TRANSPORTATION, SUCH TERM SHALL, FOR THE PURPOSE OF THIS CONTRACT, BE CONSIDERED AND TAKEN AS MEANING AND DESIGNATING THE RESPECTIVE OFFICER OR EMPLOYEE OF CUYAHOGA COUNTY WHOSE DUTY OR FUNCTION IT IS TO DEAL WITH THE SUBJECT MATTER IN CONNECTION WITH WHICH SUCH TERM IS USED AND SPECIFICALLY:

THE STATE - MEANS CUYAHOGA COUNTY.
DEPARTMENT - MEANS THE CUYAHOGA COUNTY DEPARTMENT OF PUBLIC WORKS.
DIRECTOR - MEANS THE CUYAHOGA COUNTY DIRECTOR OF PUBLIC WORKS, HIS/HER DEPUTIES, OR ANY ENGINEER DESIGNATED AS THE DIRECTOR'S REPRESENTATIVE.
DISTRICT CONSTRUCTION ENGINEER (DCE)/DISTRICT CONSTRUCTION ADMINISTRATOR (DCA) OR ENGINEER - MEANS THE AREA CONSTRUCTION ENGINEER, OR THE DULY AUTHORIZED AGENT OR REPRESENTATIVE OF THE CUYAHOGA COUNTY DIRECTOR OF PUBLIC WORKS, ACTING WITHIN THE SCOPE OF HIS/HER AUTHORITY FOR THE PURPOSES OF CONSTRUCTION ENGINEERING AND ADMINISTRATION OF THE CONTRACT.
LABORATORY - MEANS ANY LABORATORY DESIGNATED BY THE COUNTY.

GENERAL PROVISIONS

ALL REFERENCES TO THE GENERAL PROVISIONS (SECTION 100) OF THE OHIO DEPARTMENT OF TRANSPORTATION'S CONSTRUCTION AND MATERIAL SPECIFICATIONS (ODOT CMS) THAT ARE CITED IN THE ITEMIZED SPECIFICATIONS, SUPPLEMENTAL SPECIFICATIONS, PROPOSAL NOTES, PLANS OR ELSEWHERE IN THE CONTRACT DOCUMENTS SHALL, FOR THE PURPOSE OF THIS CONTRACT, BE CONSIDERED AND TAKEN AS MEANING THE CUYAHOGA COUNTY ENGINEER'S GENERAL PROVISIONS AS CONTAINED IN THE "CUYAHOGA COUNTY ENGINEER SPECIFICATION BOOKLET". THE SUBSECTION NUMBERS AND TOPICS USED IN THE COUNTY'S GENERAL PROVISIONS CORRESPOND TO THOSE CONTAINED IN THE ODOT CMS.

COOPERATION BETWEEN CONTRACTORS

IT IS ANTICIPATED THAT OTHER CONTRACTORS MAY BE WORKING ON PROJECTS ADJACENT TO OR WITHIN THE LIMITS OF THIS PROJECT, EITHER FOR THE COUNTY OR FOR OTHER PUBLIC AGENCIES. THE CONTRACTOR SHALL COOPERATE AND COORDINATE HIS/HER OPERATIONS, INCLUDING PROVISIONS FOR THE MAINTENANCE OF TRAFFIC, WITH THE CONTRACTORS OF OTHER PROJECTS THAT MAY BE IN FORCE DURING THE LIFE OF THIS CONTRACT. THE CONTRACTOR'S ATTENTION IS SPECIFICALLY DRAWN TO SECTION 105.08 OF THE CUYAHOGA COUNTY ENGINEER'S GENERAL PROVISIONS. NO WAIVER OF ANY OF THE PROVISIONS OF SECTION 105.08 IS INTENDED.

AS A SEPARATE PROJECT, DOMINION ENERGY WILL BE RELOCATING THEIR EXISTING GAS LINE THAT RUNS UNDER THE CUYAHOGA RIVER. IT WILL BE TEMPORARILY CONNECTED TO THE TEMPORARY BRIDGE BUILT FOR THIS PROJECT UNTIL IT CAN BE PERMANENTLY RELOCATED ONTO THE PERMANENT BRIDGE 00.42. THE CONTRACTOR SHALL COORDINATE WITH DOMINION ENERGY AND DOMINION ENERGY'S CONTRACTOR SO THAT THE SUBSEQUENT CONTRACTORS MAY COMPLETE THEIR PROPOSED WORK, INCLUDING MAINTENANCE OF TRAFFIC.

DUST CONTROL

THE CONTRACTOR SHALL FURNISH AND APPLY WATER AND CALCIUM CHLORIDE FOR DUST CONTROL AS DIRECTED BY THE ENGINEER. THE FOLLOWING ESTIMATED QUANTITIES HAVE BEEN INCLUDED FOR DUST CONTROL PURPOSES:

ITEM 616 - WATER	12	MGAL
ITEM 616 - CALCIUM CHLORIDE	1.2	TON

CUY - OLD ROCKSIDE ROAD

P:\PR57030\Cadd\Sheets\ORR_91563_GN001.dwg 02-Sep-21 5:53 PM

CALCULATED VLE CHECKED JTP

GENERAL NOTES

WORK INVOLVEMENT NEAR THE CUYAHOGA VALLEY NATIONAL PARK AND CUYAHOGA VALLEY SCENIC RAILROAD

THE CONTRACTOR SHALL ADHERE TO THE FOLLOWING SPECIFIC REQUIREMENTS:

CONSTRUCTION WORK SHALL BE LIMITED TO THE CONFINES OF THE EXISTING AND PROPOSED RIGHT-OF-WAY AND OTHER DESIGNATED WORK AREAS FOR THE PROJECT.

NO DEBRIS OR CONSTRUCTION MATERIALS SHALL BE STORED ON PARK PROPERTY BEFORE, DURING OR AFTER CONSTRUCTION WORK COMMENCES. DEBRIS AND RUBBLE SHALL BE CONTROLLED SO THAT IT IS NOT WASHED OR OTHERWISE CARRIED ONTO PARK PROPERTY VIA ANY WATERWAY WITHIN THE LIMITS OF THE PROJECT.

THE CONTRACTOR SHALL MAINTAIN EXISTING DRAINAGE PATTERNS ACROSS THE PROJECT RIGHT-OF-WAY DURING CONSTRUCTION SO AS TO PREVENT EROSION, PONDING AND FLOODING OF ADJACENT PARK PROPERTY.

VEHICULAR AND PEDESTRIAN ACCESS TO THE PARK SHALL BE MAINTAINED AT ALL TIMES, EXCEPT FOR THE BRIEF PERIODS OF TIME NEEDED DURING DRIVEWAY RECONSTRUCTION, PER THE GENERAL NOTES AND DETAILS FOUND IN THE MAINTENANCE OF TRAFFIC PLANS, UNLESS OTHERWISE SPECIFICALLY NOTED. THIS SHOULD BE LIMITED TO 2-3 CLOSURES OF 2-3 DAYS EACH.

PARK ROADS SHALL NOT BE DESIGNATED AS HAUL ROADS OR DETOUR ROADS DURING THE CONSTRUCTION OF THE PROJECT. IF THE CONTRACTOR REQUIRES THE USE OF PARK ROADS FOR WORK PURPOSES, THEN THE CONTRACTOR SHALL OBTAIN ALL NECESSARY PERMITS FROM PARK AUTHORITIES. THE CONTRACTOR AT HIS /HER OWN EXPENSE SHALL PAY ALL COSTS ASSOCIATED WITH OBTAINING SUCH PERMITS.

DAMAGE TO TREES, SHRUBS AND OTHER NATURAL FEATURES AND TO PARK FACILITIES OUTSIDE OF THE DESIGNATED WORK LIMITS AS A RESULT OF THE CONTRACTOR'S WORK SHALL BE REPAIRED BY THE CONTRACTOR AT HIS/HER OWN EXPENSE, SUBJECT TO REVIEW AND COORDINATION WITH THE PARK.

ANY AREAS DISTURBED BY THE CONTRACTOR OUTSIDE OF THE DESIGNATED WORK LIMITS SHALL BE RESTORED AT HIS/HER OWN EXPENSE, IN A CONDITION EQUAL TO OR BETTER THAN CONDITIONS THAT EXISTED PRIOR. THE CUYAHOGA COUNTY ENGINEER GENERAL PROVISIONS 104.04 AND 107.10, AND CMS SPECIFICATION 659 SHALL BE FOLLOWED IN THE RESTORATION. THE SEED MIXTURE APPROVED BY THE PARK FOR RESTORATION OF GRASS AREAS SHALL BE AS STIPULATED IN SECTION 400 "PROPOSAL NOTES" OF THE CUYAHOGA COUNTY ENGINEER SPECIFICATION BOOKLET.

INSTALL AND MAINTAIN TEMPORARY CONSTRUCTION FENCING ALONG THE KNOWN BOUNDARIES OF THE CUYAHOGA NATIONAL PARK WITHIN THE PROJECT CONSTRUCTION LIMITS PRIOR TO THE START OF CONSTRUCTION ACTIVITIES.

PRIOR TO THE START OF CONSTRUCTION ACTIVITIES, INSTALL SIGNAGE APPROVED BY THE ENGINEER TO ALERT CUYAHOGA VALLEY NATIONAL PARK USERS OF CONSTRUCTION ACTIVITIES AND ACCESS RESTRICTIONS OR CLOSURES, AND TO DIRECT USERS TO SECONDARY ACCESS POINTS.

PROVIDE THE CONSTRUCTION SCHEDULE TO THE CUYAHOGA VALLEY NATIONAL PARK SUPERINTENDENT AND CITY OF INDEPENDENCE ENGINEER 30 DAYS PRIOR TO THE START OF CONSTRUCTION ACTIVITIES.

CUYAHOGA VALLEY NATIONAL PARK CONTACT

ERIC SEMPLE
SUPERVISORY PROJECT MANAGER
ERIC_SEMPLE@NPS.GOV
PHONE: 440-546-5930
CELL: 440-742-6073

CUYAHOGA VALLEY SCENIC RAILROAD CONTACTS

PRIMARY:	SECONDARY:
MATT PEEL	JEREMY SCHROEDER
DIVISION SUPERINTENDENT	DIRECTOR OF OPERATION
MPEEL@CSVR.COM	JSCHROEDER@CSVR.COM
CELL: 216-509-7332	CELL: 630-360-4098

ALL WORK ASSOCIATED WITH THIS ITEM SHALL BE INCLUDED IN THE LUMP SUM CONTRACT PRICE FOR ITEM 614 - MAINTAINING TRAFFIC, AS PER PLAN.

CLEARING AND GRUBBING

IN ADDITION TO THE TREES OR STUMPS SPECIFICALLY MARKED FOR REMOVAL WITHIN THE LIMITS OF THE PROJECT, A LUMP SUM QUANTITY IS INCLUDED IN THE GENERAL SUMMARY FOR ITEM 201, CLEARING AND GRUBBING. ALL PROVISIONS AS SET FORTH IN THE SPECIFICATIONS UNDER THIS ITEM ARE INCLUDED IN THE LUMP SUM PRICE BID FOR ITEM 201, CLEARING AND GRUBBING.

ROADWAY

ITEM 202 - GATE REMOVED FOR REUSE, AS PER PLAN

THE CONTRACTOR SHALL REMOVE THE GATE ASSEMBLY, COMPRISED OF THE GATE AND A GATEKEEPER, FROM THE CVSR DRIVE AND STORE FOR REUSE. UPON COMPLETION OF THE CVSR DRIVE CONSTRUCTION, THE CONTRACTOR SHALL CONSTRUCT NEW FOUNDATIONS AND RE-INSTALL THE GATE AND GATEKEEPER AS DETAILED BELOW. CONTRACTOR SHALL USE EXTREME CARE IN THE REMOVAL, STORAGE AND SUBSEQUENT RE-INSTALLATION OF THE GATE AND GATEKEEPER. ANY DAMAGE BY THE NEGLIGENCE OF THE CONTRACTOR, AS DETERMINED BY THE ENGINEER, SHALL BE REPAIRED OR REPLACED AT THE CONTRACTOR'S EXPENSE.

ALL COSTS ASSOCIATED WITH THE REMOVAL, STORAGE AND RE-INSTALLATION OF THE GATE ASSEMBLY, INCLUDING, BUT NOT LIMITED TO ALL LABOR AND MATERIAL NECESSARY FOR THE REMOVAL OF THE EXISTING CONCRETE FOUNDATIONS, EXCAVATION AND DISPOSAL OF WASTE MATERIALS, CONCRETE FOUNDATION CONSTRUCTION INCLUDING REBAR, MOUNTING HARDWARE, AND ALL ELSE NECESSARY TO REMOVE, STORE AND RE-INSTALL THE GATE AND GATEKEEPER IN PROPER WORKING ORDER SHALL BE INCLUDED IN THE UNIT PRICE BID FOR EACH ITEM 202 - GATE REMOVED FOR REUSE, AS PER PLAN.

ITEM 202 - REMOVAL MISC.: FLAGPOLE REMOVED

CONTRACTOR SHALL REMOVE AND DISPOSE OF THE EXISTING FLAGPOLE AND FOUNDATION AT 7919 OLD ROCKSIDE ROAD. THE CAVITY CREATED BY THE FOUNDATION REMOVAL SHALL BE BACKFILLED PER ODOT CMS 202.02.

PAYMENT FOR ALL OPERATIONS OF THE ABOVE DESCRIBED WORK SHALL BE PROVIDED PER THE UNIT PRICE BID FOR EACH ITEM 202 - REMOVAL MISC.: FLAGPOLE REMOVED AND SHALL BE CONSIDERED FULL COMPENSATION FOR ALL LABOR, MATERIALS, AND EQUIPMENT NECESSARY TO COMPLETE THE WORK.

ITEM 202 - REMOVAL MISC.: LIGHT REMOVED

CONTRACTOR SHALL REMOVE AND DISPOSE OF THE EXISTING LIGHT AS WELL AS MOUNTING STRUCTURE/HARDWARE AT 7919 OLD ROCKSIDE ROAD. CONTRACTOR SHALL COORDINATE WITH THE PROPERTY OWNER TO DISCONNECT IN-BUILDING ELECTRICAL CIRCUIT AS NECESSARY. A JUNCTION BOX SHALL BE INSTALLED AT THE LIMIT OF THE TEMPORARY RIGHT OF WAY IN ORDER TO TERMINATE THE UNDERGROUND WIRING AND ALLOW FOR FUTURE RECONNECTION.

PAYMENT FOR ALL OPERATIONS OF THE ABOVE DESCRIBED WORK SHALL BE PROVIDED PER THE UNIT PRICE BID FOR EACH ITEM 202 - REMOVAL MISC.: LIGHT REMOVED AND SHALL BE CONSIDERED FULL COMPENSATION FOR ALL LABOR, MATERIALS, AND EQUIPMENT NECESSARY TO COMPLETE THE WORK.

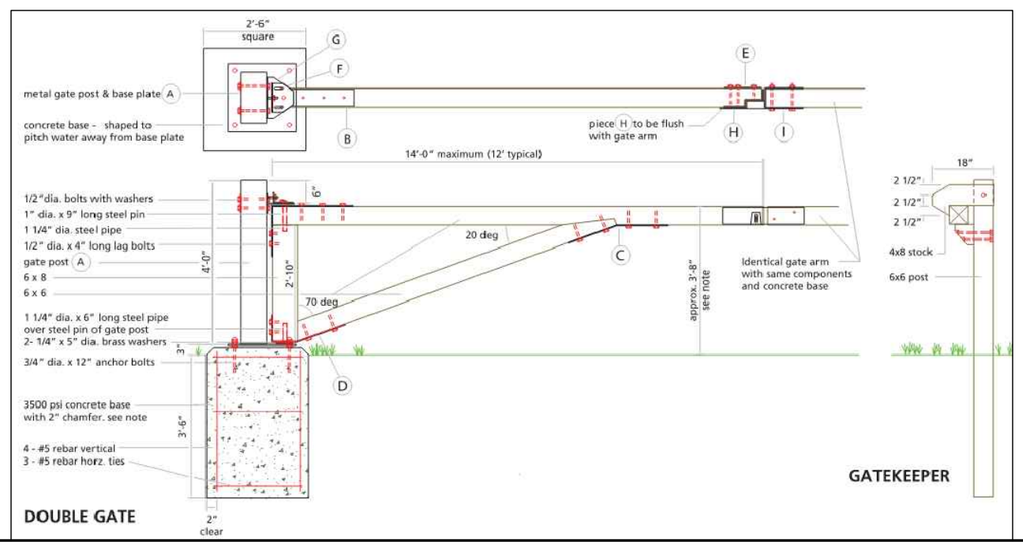

ITEM 203 - EMBANKMENT, AS PER PLAN

USE OF SLAG, IN ANY FORM, IS NOT PERMITTED.

ITEM 209 - LINEAR GRADING, AS PER PLAN

THIS WORK SHALL CONSIST OF THE COMPLETE GRADING AND PREPARATION OF AREAS UPON WHICH TOPSOIL AND SEED/SOD ARE TO BE PLACED; ALL IN ACCORDANCE WITH THESE SPECIFICATIONS AND IN REASONABLY CLOSE CONFORMITY WITH THE LINES, GRADES, DEPTHS AND LIMITS SHOWN ON THE PLANS OR AS OTHERWISE DIRECTED BY THE ENGINEER. SEE THE TYPICAL SECTION(S) / DETAIL (S) SHOWN ON SHEET(S) 4-6. THIS WORK SHALL INCLUDE ALL LABOR AND EQUIPMENT NECESSARY TO PRODUCE TYPICAL SECTIONS AND TREE LAWN/BERM GRADES AS DETAILED IN THE PLANS. THIS SHALL INCLUDE EXCAVATION TO THE REQUIRED LIMITS AND DEPTH, DISPOSAL OF UNUSED MATERIAL AND EMBANKMENT CONSTRUCTION USING NATURAL SOILS (703.16.A).

209.08 METHOD OF MEASUREMENT

THE QUANTITY OF LINEAR GRADING WILL BE MEASURED BY THE NUMBER OF SQUARE YARDS COMPLETED AND ACCEPTED.

209.09 BASIS OF PAYMENT

THE ACCEPTED QUANTITY OF LINEAR GRADING WILL BE PAID AT THE CONTRACT UNIT PRICE BID PER SQUARE YARD FOR ITEM 209 - LINEAR GRADING, AS PER PLAN.

THE FOLLOWING ESTIMATED QUANTITY HAS BEEN CARRIED TO THE GENERAL SUMMARY FOR USE AS DESCRIBED ABOVE:

ITEM 209 - LINEAR GRADING, AS PER PLAN 2,930 SY

ITEM 608 - 4" CONCRETE WALK, AS PER PLAN

IN ADDITION TO THE REQUIREMENTS OF 608, THE FOLLOWING SHALL APPLY:

THE "CLASS QC MISC." OR "CLASS QC 1" CONCRETE USED FOR SIDEWALK (608) SHALL CONFORM TO THE "MODIFICATIONS TO ITEM 499 CONCRETE - GENERAL" AS CONTAINED IN THE "SECTION 400 PROPOSAL NOTES" OF THE "CUYAHOGA COUNTY ENGINEER SPECIFICATION BOOKLET".

ALL CONCRETE WALK SHALL BE A MINIMUM OF 4" THICK AND HAVE A 2" COMPACTED SCREENINGS BED WHICH MEETS THE REQUIREMENTS OF 703.10 (LIMITED TO CRUSHED STONE). WHERE THE WALK CROSSES A FLEXIBLE DRIVEWAY, THE THICKNESS SHALL BE INCREASED PER THE CUYAHOGA COUNTY ENGINEER'S CONSTRUCTION DRAWING BP-4.1C. THE COST FOR FURNISHING AND PLACING THE 2" COMPACTED SCREENINGS BED AND FOR THE THICKENING AT FLEXIBLE DRIVES PER THE BP-4.1C CONSTRUCTION DRAWING SHALL BE INCLUDED IN THE CONTRACT UNIT PRICE BID FOR ITEM 608 - 4" CONCRETE WALK, AS PER PLAN.

PER 608.03(C), IT IS REQUIRED THAT 1/2 INCH THICK EXPANSION JOINT MATERIAL (705.03) BE INSTALLED BETWEEN THE WALK AND THE BACK OF CURB OR ANY OTHER FIXED OBJECT. IN ADDITION TO THE LOCATIONS SPECIFIED UNDER 608.03(C), TRANSVERSE EXPANSION JOINTS SHALL BE CONSTRUCTED AT INTERVALS OF NOT MORE THAN 25 TO 30 FEET UNLESS OTHERWISE DIRECTED BY THE ENGINEER. THE EXPANSION JOINT FILLER (705.03) SHALL BE PLACED AT THE TRANSVERSE EXPANSION JOINTS FOR THE FULL DEPTH/WIDTH OF THE CONCRETE WALK AND SHALL BE TRULY NORMAL TO GRADE. THE TOP 1/2 INCH OF THE EXPANSION JOINT PLACED BETWEEN THE WALK AND BACK OF CURB SHALL BE SEALED WITH 705.04 JOINT SEALER.

UNLESS OTHERWISE REQUIRED BY MUNICIPAL STANDARDS/ORDINANCES, THE FINAL SURFACE SHALL BE TEXTURED BY USE OF AN ACCEPTED BROOM SO AS TO PRODUCE A UNIFORM, GRITTY, TRANSVERSE TEXTURE, AFTER WHICH, THE CONTRACTOR IS REQUIRED TO RETRACE THE PREVIOUSLY FORMED JOINTS AND OUTSIDE EDGES OF THE WALK.

FINAL FINISH SHALL BE IN ACCORDANCE WITH THE APPLICABLE MUNICIPAL STANDARDS/ORDINANCES.

THE COST OF THE MATERIAL AND LABOR ASSOCIATED WITH THE ABOVE WORK IS INCLUDED IN THE CONTRACT UNIT PRICE BID FOR ITEM 608 - 4" CONCRETE WALK, AS PER PLAN.

CUY - OLD ROCKSIDE ROAD

P:\PR57030\Cadd\Sheets\ORR_91563_GN002.dwg 02-Sep-21 5:53 PM

MONUMENT ASSEMBLIES

IN ACCORDANCE WITH SECTION 107.10 OF THE GENERAL PROVISIONS, DISTURBED PRIVATE RIGHT OF WAY MONUMENTS ON OR OUTSIDE THE PROJECT RIGHT OF WAY LIMITS AND NOT ENCLOSED WITHIN A TEMPORARY EASEMENT FOR THE PROJECT SHALL BE RESET OR REPLACED AT THE CONTACTOR'S EXPENSE. PRIVATE RIGHT OF WAY MONUMENTS WITHIN THE PROJECT RIGHT OF WAY/TEMPORARY EASEMENTS WHICH ARE UNAVOIDABLY DISPLACED OR DAMAGED DURING THE CONTRACT WORK SHALL BE RESET OR REPLACED IN ACCORDANCE WITH SECTION 107.10 OF THE CUYAHOGA COUNTY ENGINEER'S GENERAL PROVISIONS AND PAID FOR AT THE PER EACH CONTRACT UNIT PRICE BID FOR "ITEM 623 - RIGHT OF WAY MONUMENT;" ALL AT THE DETERMINATION/DIRECTION OF THE ENGINEER.

MONUMENTS SHALL BE LEFT UNDISTURBED UNTIL THE CUYAHOGA COUNTY DEPARTMENT OF PUBLIC WORKS' SURVEY OFFICE HAS CHECKED/VERIFIED THE REFERENCES PROVIDED BY THE CONTRACTOR'S SURVEYOR. IN ALL CASES THE CONTRACTOR SHALL CONTACT THE CUYAHOGA COUNTY DEPARTMENT OF PUBLIC WORKS' SURVEY OFFICE AT (216) 698-2329 NO LESS THAN TWO (2) WEEKS PRIOR TO THE DISTURBANCE OF ANY EXISTING MONUMENTS.

THE FOLLOWING ESTIMATED QUANTITY IS PROVIDED IN THE GENERAL SUMMARY FOR ALL MONUMENTS KNOWN TO EXIST OR INITIALLY FOUND/ENCOUNTERED WITHIN THE PROPOSED WORK LIMITS:

ITEM 623 - RIGHT-OF-WAY MONUMENT 2 EACH

ITEM 623 - CONSTRUCTION LAYOUT STAKES AND SURVEYING, AS PER PLAN

623.08 CONSTRUCTION LAYOUT STAKING.

1. ALL HORIZONTAL CONTROL AND, IF NECESSARY, VERTICAL CONTROL REQUIRED FOR THE COMPLETE LAYOUT AND PERFORMANCE OF THE WORK UNDER THIS CONTRACT SHALL BE DONE BY THE CONTRACTOR AT THE CONTRACTOR'S EXPENSE AND MAY BE PERIODICALLY REVIEWED BY THE ENGINEER. ANY INSPECTION OR REVIEWING OF THE CONTRACTOR'S LAYOUT BY THE ENGINEER AND THE ACCEPTANCE OF ALL OR ANY PART OF IT SHALL NOT RELIEVE THE CONTRACTOR OF HIS/HER RESPONSIBILITY TO PRODUCE THE PROPER WORK DIMENSIONS, GRADES AND ELEVATIONS. THE REQUIREMENTS OF SECTION 107.10 OF THE GENERAL PROVISIONS ALSO APPLY.

2. THE CONTRACTOR SHALL VERIFY ALL DIMENSIONS AND, IF APPLICABLE, ALL GRADES, LINES AND LEVELS AS INDICATED ON THE DRAWINGS AND SPECIFICATIONS, AND HE/SHE SHALL REPORT ANY ERRORS OR INCONSISTENCIES IN THE ABOVE TO THE ENGINEER BEFORE COMMENCING WORK OR ORDERING ANY MATERIAL.

3. THE CONTRACTOR SHALL MARK (PAINT) OR STAKE THE PROJECT STATION NUMBERS AT INTERVALS OF 50 FEET (OR LESS AS DIRECTED OR APPROVED BY THE ENGINEER) BEFORE COMMENCING THE WORK.

4. THE CONTRACTOR SHALL BE RESPONSIBLE FOR THE PRESERVATION OF ALL STAKES AND MARKS AND SHALL REPLACE THEM AT HIS/HER EXPENSE IF THEY ARE DAMAGED, LOST, DISPLACED OR REMOVED. THE CONTRACTOR SHALL USE COMPETENT PERSONNEL AND SUITABLE EQUIPMENT FOR THE LAYOUT WORK REQUIRED AND SHALL PROVIDE THAT IT IS DONE UNDER THE SUPERVISION OF A REGISTERED SURVEYOR. THE REQUIREMENTS OF SECTION 107.10 OF THE GENERAL PROVISIONS ALSO APPLY.

623.11 BASIS OF PAYMENT.

PAYMENT WILL BE MADE UNDER:

ITEM 623 - CONSTRUCTION LAYOUT STAKES AND SURVEYING, AS PER PLAN LS

ITEM 623 - REFERENCE MONUMENT, AS PER PLAN

THIS ITEM SHALL CONSIST OF LOCATING AND REFERENCING ALL EXISTING ROADWAY AND/OR CENTERLINE MONUMENTS WITHIN THE LIMITS OF THE PROPOSED WORK FOR THE PURPOSES OF RESETTING/REESTABLISHING THEIR EXACT LOCATION IN THE EVENT THEY ARE DISPLACED OR DAMAGED DURING CONSTRUCTION. ALL WORK SHALL BE PERFORMED UNDER THE SUPERVISION OF A LICENSED SURVEYOR PROVIDED BY THE CONTRACTOR AND SHALL BE COMPLETED PRIOR TO THE START OF ANY PROXIMATE GRADING, PAVING OR OTHER SUCH OPERATIONS.

A THOROUGH SEARCH SHALL BE MADE TO LOCATE THE MONUMENTS WITHIN THE LIMITS OF THE PROPOSED WORK. UPON LOCATING THE EXISTING MONUMENTS, THE MONUMENT PINS/POINTS SHALL BE CAREFULLY EXPOSED AND REFERENCED TO NO LESS THAN THREE (3) PERMANENT OBJECTS. ANY EXISTING MONUMENTS THAT MIGHT REQUIRE REPLACEMENT SHALL BE NOTED. THE REFERENCES ALONG WITH ALL NOTATIONS SHALL BE DELIVERED TO THE CUYAHOGA COUNTY DEPARTMENT OF PUBLIC WORKS' SURVEY OFFICE IMMEDIATELY UPON COMPLETION. ADJUSTMENTS OR REPLACEMENTS OF MONUMENT BOXES OR ASSEMBLIES MAY NOT COMMENCE UNTIL THE REFERENCES HAVE BEEN CHECKED/VERIFIED AND APPROVED BY THE CUYAHOGA COUNTY DEPARTMENT OF PUBLIC WORKS' SURVEY OFFICE.

THE PER EACH UNIT PRICE PAYMENT FOR THIS WORK SHALL INCLUDE LOCATING THE MONUMENTS, CAREFULLY CLEANING OUT THE MONUMENT BOXES AND/OR EXPOSING THE MONUMENT PINS/POINTS, REFERENCING THE MONUMENTS AND ALL RELATED NOTATION.

THE FOLLOWING ESTIMATED QUANTITY IS PROVIDED IN THE GENERAL SUMMARY FOR ALL MONUMENTS KNOWN TO EXIST OR INITIALLY FOUND/ENCOUNTERED WITHIN THE PROPOSED WORK LIMITS:

ITEM 623 - REFERENCE MONUMENT, AS PER PLAN 1 EACH

LOCATION OF GUARDRAIL

THE LOCATION OF GUARDRAIL RUNS, AS SHOWN IN THESE PLANS, IS SUBJECT TO ADJUSTMENT BY THE ENGINEER TO ASSURE THAT ALL INSTALLATIONS WILL AFFORD MAXIMUM PROTECTION FOR TRAFFIC.

NON-INTEGRAL CURB REMOVED

EXISTING NON-INTEGRAL CURB SHALL BE REMOVED AND DISPOSED OF PER 202.05 IN A MANNER AND BY METHODS THAT WILL NOT DISTURB, DAMAGE OR UNDERMINE ADJACENT PAVEMENT, WALK, DRIVE APRONS OR CURB INTENDED TO REMAIN IN PLACE. ANY ADJACENT FACILITIES DAMAGED AS A RESULT OF THE CONTRACTOR'S NEGLIGENCE, AS DETERMINED BY THE ENGINEER, AND WHICH ARE NOT OTHERWISE DESIGNATED FOR REPLACEMENT, SHALL BE REPLACED AT THE CONTRACTOR'S EXPENSE, ALL AT THE DIRECTION OF THE ENGINEER.

PAYMENT FOR NON-INTEGRAL CURB REMOVAL SHALL BE MADE AT THE CONTRACT UNIT PRICE BID FOR ITEM 202-CURB REMOVED

ITEM SPECIAL - GEOTEXTILE FABRIC

DESCRIPTION

THIS WORK SHALL CONSIST OF FURNISHING AND PLACING A NONWOVEN OR A MONOFILAMENT WOVEN GEOTEXTILE FABRIC BETWEEN THE COMPLETED/ACCEPTED SUBGRADE AND THE AGGREGATE BASE (SUBBASE) FOR USE AS A PERMEABLE SEPARATOR WHICH ALLOWS LONG-TERM PASSAGE OF WATER WHILE RETAINING IN-SITU SOIL WITHOUT CLOGGING; ALL IN ACCORDANCE WITH THESE SPECIFICATIONS, THE APPLICABLE PROVISIONS OF AASHTO M 288, THE MANUFACTURER'S RECOMMENDATIONS AND AT THE DIRECTION OR APPROVAL OF THE ENGINEER.

MATERIALS

FIBERS USED IN THE MANUFACTURE OF THE GEOTEXTILES, AND THE THREADS USED IN JOINING GEOTEXTILES BY SEWING, SHALL BE RESISTANT TO CHEMICAL ATTACK, MILDEW, AND ROT; AND SHALL CONSIST OF LONG-CHAIN SYNTHETIC POLYMERS, COMPOSED OF AT LEAST 95 PERCENT BY WEIGHT OF POLYOLEFINS OR POLYESTERS. THEY SHALL BE FORMED INTO A STABLE NETWORK SUCH THAT THE FILAMENTS OR YARNS RETAIN THEIR DIMENSIONAL STABILITY RELATIVE TO EACH OTHER, INCLUDING SELVAGES. ACCEPTABLE/APPROVED NONWOVEN OR MONOFILAMENT WOVEN GEOTEXTILES USED FOR THIS PURPOSE (SUBGRADE/SUBBASE - SEPARATION/FILTRATION) SHALL MINIMALLY CONFORM TO THE APPLICABLE PHYSICAL REQUIREMENTS OF AASHTO M 288, "TABLE 1 (CLASS 2)" AND "TABLE 2" FOR "CLASS 2 GEOTEXTILES" AS SHOWN HEREINAFTER.

TABLE 1. GEOTEXTILE STRENGTH PROPERTY REQUIREMENTS (1)
CLASS 2 GEOTEXTILE

	TEST METHODS	UNITS	NONWOVEN ELONGATION > 50% (2)	MONOFILAMENT WOVEN ELONGATION < 50% (2)
GRAB STRENGTH	ASTM D 4632	(LBS.)	160	250
SEWN SEAM STRENGTH	ASTM D 4632	(LBS.)	140	220
TEAR STRENGTH	ASTM D 4533	(LBS.)	55	55
PUNCTURE STRENGTH	ASTM D 4833	(LBS.)	55	90

PROPERTY NOTES FOR TABLE 1

1. ALL NUMERIC VALUES IN TABLE 1 REPRESENT MINIMUM AVERAGE ROLL VALUES (MARV) IN THE WEAKER PRINCIPAL DIRECTION.

2. AS MEASURED IN ACCORDANCE WITH ASTM D 4632.

TABLE 2. SUBSURFACE DRAINAGE GEOTEXTILE REQUIREMENTS
CLASS 2 GEOTEXTILES

	TEST METHODS	UNITS	REQUIREMENTS PERCENT IN-SITU SOIL PASSING NO. 200 (1) < 15	15 TO 50	> 50
PERMITIVITY (4)	ASTM D 4491	sec^(-1)	0.5	0.2	0.1
APPARENT OPENING SIZE (3)	ASTM D 4751	mm	0.43	0.25	0.22 (2)
ULTRAVIOLET STABILITY (RETAINED STRENGTH)	ASTM D 4355	%	50% AFTER 500 HRS. OF EXPOSURE		

PROPERTY NOTES FOR TABLE 2

1. BASED ON GRAIN SIZE ANALYSIS OF IN-SITU SOIL IN ACCORDANCE WITH AASHTO T 88.

2. FOR COHESIVE SOILS WITH A PLASTICITY INDEX GREATER THAN 7, GEOTEXTILE MAXIMUM AVERAGE ROLL VALUE FOR APPARENT OPENING SIZE IS 0.30 MM.

3. MAXIMUM AVERAGE ROLL VALUE.

4. MINIMUM AVERAGE ROLL VALUE (MARV) IN THE WEAKER PRINCIPAL DIRECTION.

CERTIFICATION SHALL BE FURNISHED IN ACCORDANCE WITH 101.03 (CERTIFIED TEST DATA) OF THE CUYAHOGA COUNTY ENGINEER'S GENERAL PROVISIONS AND PER AASHTO M 288; ALL BEFORE THE FABRIC IS PLACED. THE ENGINEER MAY REQUIRE SAMPLING FOR TESTING PURPOSES AS DIRECTED BY THE LABORATORY AND PER THE APPLICABLE PORTIONS OF AASHTO M 288.

CONSTRUCTION REQUIREMENTS

GEOTEXTILE PACKAGING AND STORING

THE GEOTEXTILE ROLLS SHALL BE FURNISHED WITH SUITABLE WRAPPING FOR PROTECTION AGAINST MOISTURE, EXTENDED ULTRAVIOLET EXPOSURE, CONTAMINANTS AND DAMAGE DUE TO SHIPPING. EACH ROLL SHALL BE LABELED OR TAGGED TO PROVIDE PRODUCT IDENTIFICATION SUFFICIENT FOR FIELD INVENTORY AND QUALITY CONTROL PURPOSES. ROLLS SHALL BE STORED IN A MANNER WHICH PROTECTS THEM FROM THE ELEMENTS. IF STORED OUTDOORS, THEY SHALL BE ELEVATED AND PROTECTED WITH A WATERPROOF COVER.

GEOTEXTILE EXPOSURE FOLLOWING PLACEMENT

EXPOSURE OF GEOTEXTILES TO THE ELEMENTS BETWEEN LAYDOWN AND COVER SHALL BE KEPT TO A MINIMUM. GEOTEXTILES SHALL BE PLACED AND COVERED AS QUICKLY AS POSSIBLE. IN ANY CASE, EXPOSURE SHALL NOT EXCEED SEVEN (7) DAYS.

SEWN SEAMS

BOTH FACTORY AND FIELD SEWN SEAMS SHALL CONFORM TO THE STRENGTH REQUIREMENTS OF THE "MATERIALS" SECTION SPECIFIED HEREIN. ALL SEAMS SHALL BE SUBJECT TO THE APPROVAL OF THE ENGINEER. THREADS USED FOR SEWING SHALL CONSIST OF HIGH STRENGTH POLYPROPYLENE OR POLYESTER. NYLON THREAD SHALL NOT BE USED. THE THREAD SHALL BE OF CONTRASTING COLOR TO THAT OF THE GEOTEXTILE ITSELF. FOR SEAMS WHICH ARE SEWN IN THE FIELD, THE CONTRACTOR SHALL PROVIDE AT LEAST A SIX (6) FOOT LENGTH OF SEWN SEAM FOR SAMPLING BY THE ENGINEER BEFORE THE GEOTEXTILE IS INSTALLED. FOR SEAMS WHICH ARE SEWN IN THE FACTORY, THE ENGINEER SHALL OBTAIN SAMPLES OF THE FACTORY SEAMS AT RANDOM FROM ANY ROLL OF GEOTEXTILE WHICH IS USED ON THE PROJECT. FOR SEAMS THAT ARE FIELD SEWN, THE SEAMS SEWN FOR SAMPLING SHALL BE SEWN USING THE SAME EQUIPMENT AND PROCEDURES AS WILL BE USED FOR THE PRODUCTION SEAMS. IF SEAMS ARE SEWN IN BOTH THE MACHINE AND CROSS MACHINE DIRECTION, SAMPLES OF SEAMS FROM BOTH DIRECTIONS SHALL BE PROVIDED. THE SEAM ASSEMBLY DESCRIPTION SHALL BE SUBMITTED BY THE CONTRACTOR ALONG WITH THE SAMPLE OF THE SEAM. THE DESCRIPTION SHALL INCLUDE THE SEAM TYPE, STITCH TYPE, SEWING THREAD AND STITCH DENSITY.

CALCULATED VLE CHECKED JTP

GENERAL NOTES

CUY - OLD ROCKSIDE ROAD

P:\PR57030\Cadd\Sheets\ORR_91563_GN003.dwg 02-Sep-21 5:53 PM

ITEM SPECIAL - GEOTEXTILE FABRIC (CONT'D)

SITE PREPARATION

THE INSTALLATION SITE SHALL BE PREPARED IN ACCORDANCE WITH ITEM 204 - SUBGRADE COMPACTION. REMOVE ALL SHARP OBJECTS AND LARGE STONES FROM THE SUBGRADE.

INSTALLATION

THE GEOTEXTILE SHALL BE UNROLLED AND LAID AS SMOOTHLY AS POSSIBLE ON THE PREPARED AND ACCEPTED SUBGRADE IN THE DIRECTION OF CONSTRUCTION TRAFFIC. WRINKLES OR FOLDS SHALL BE AVOIDED. ADJACENT GEOTEXTILE ROLLS SHALL BE OVERLAPPED TWO (2) FEET IN THE DIRECTION OF SUBBASE PLACEMENT. THE GEOTEXTILE MAY BE HELD IN PLACE PRIOR TO SUBBASE PLACEMENT BY PINS, STAPLES, OR PILES OF SUITABLE SUBBASE MATERIAL. ON CURVES, THE GEOTEXTILE MAY BE FOLDED OR CUT TO CONFORM TO THE CURVES. THE FOLD OR OVERLAP SHALL BE IN THE DIRECTION OF CONSTRUCTION AND HELD IN PLACE AS PRESCRIBED ABOVE.

DAMAGE REPAIR

PRIOR TO COVERING, THE GEOTEXTILES SHALL BE INSPECTED BY A CERTIFIED INSPECTOR OF THE ENGINEER TO ENSURE THAT THE GEOTEXTILE HAS NOT BEEN DAMAGED (I.E., HOLES, TEARS, RIPS) DURING THE INSTALLATION. DAMAGED GEOTEXTILES, AS IDENTIFIED BY THE ENGINEER, SHALL BE REPAIRED IMMEDIATELY. COVER THE DAMAGED AREA WITH A GEOTEXTILE PATCH, WHICH EXTENDS TWO (2) FEET BEYOND THE DAMAGED AREA.

SUBBASE PLACEMENT

THE SUBBASE SHALL BE PLACED BY END DUMPING ONTO THE GEOTEXTILE FROM THE EDGE OF THE GEOTEXTILE, OR OVER PREVIOUSLY PLACED SUBBASE AGGREGATE. CONSTRUCTION VEHICLES SHALL NOT BE ALLOWED DIRECTLY ON THE GEOTEXTILE. USING A MOTOR GRADER OR BULLDOZER, SPREAD THE SUBBASE MATERIAL FROM THE BACK-DUMPED PILE. MAINTAIN A MINIMUM LIFT THICKNESS OF SIX (6) INCHES BETWEEN THE GEOTEXTILE AND EQUIPMENT TIRES OR TRACKS AT ALL TIMES. ANY SUDDEN STOPS, STARTS OR TURNS ON THE SUBBASE MATERIAL BY CONSTRUCTION EQUIPMENT SHALL BE AVOIDED. IF VIBRATORY COMPACTORS ARE USED, REASONABLE COMPACTION AND RUT STABILITY MUST FIRST BE ESTABLISHED BY THE SUBBASE SPREADING EQUIPMENT. ANY RUTS OCCURRING DURING CONSTRUCTION SHALL BE FILLED WITH ADDITIONAL SUBBASE MATERIAL, AND COMPACTED TO THE SPECIFIED DENSITY. IF PLACEMENT OF BACKFILL MATERIAL CAUSES DAMAGE TO THE GEOTEXTILE, THE DAMAGED AREA SHALL BE REPAIRED IMMEDIATELY. CLEAR THE DAMAGED AREA, PLUS AN ADDITIONAL THREE (3) FEET AROUND THE DAMAGED AREA OF ALL FILL MATERIAL. COVER THE DAMAGED AREA WITH A GEOTEXTILE PATCH AS PREVIOUSLY DESCRIBED IN THE "DAMAGE REPAIR" SECTION HEREIN. REPLACE THE REMOVED SUBBASE MATERIAL, COMPACTING TO THE SPECIFIED DENSITY. ALL SUBSEQUENT SUBBASE PLACEMENT PROCEDURES SHALL BE MODIFIED, AS REQUIRED, TO ELIMINATE FURTHER DAMAGE FROM TAKING PLACE (I.E., INCREASE INITIAL LIFT THICKNESS, DECREASE EQUIPMENT LOADS, ETC.).

METHOD OF MEASUREMENT

THE GEOTEXTILE SHALL BE MEASURED BY THE NUMBER OF SQUARE YARDS COMPUTED FROM THE PAYMENT LINES SHOWN ON THE PLANS OR FROM PAYMENT LINES ESTABLISHED IN WRITING BY THE ENGINEER. THIS EXCLUDES SEAM OVERLAPS.

EARTHWORK AND SUBBASE ITEMS ARE MEASURED AND PAID SEPARATELY.

BASIS OF PAYMENT

THE ACCEPTED QUANTITIES OF GEOTEXTILE FABRIC SHALL BE PAID FOR AT THE CONTRACT UNIT PRICE PER SQUARE YARD IN PLACE FOR ITEM SPECIAL - GEOTEXTILE FABRIC.

EROSION CONTROL

ITEM 659 - SEEDING AND MULCHING, AS PER PLAN

WHEN THE ABOVE ITEM IS CALLED FOR ON THE PLANS OR IN THE PROPOSAL, ALL APPLICABLE PROVISIONS OF ITEM 659, AS SET FORTH IN THE CONSTRUCTION AND MATERIAL SPECIFICATIONS, SHALL APPLY UNLESS MODIFIED HEREIN.

659.07 SEEDS. UNLESS OTHERWISE DIRECTED/APPROVED BY THE ENGINEER, HIGH QUALITY GERMINATION RATES ARE REQUIRED. CLASS 1 SEED MIX SHALL BE USED ON SLOPES 3:1 OR FLATTER. USE CLASS 3B ON SLOPES STEEPER THAN 3:1.

659.09 NATIVE GRASSES AND WILDFLOWERS. UNLESS OTHERWISE DIRECTED/APPROVED BY THE ENGINEER, THE FOLLOWING SEED MIXTURE CLASS(ES) SHALL BE USED:

CLASS 1 WHEN SLOPES ARE 3:1 OR FLATTER.
CLASS 3B WHEN SLOPES ARE STEEPER THAN 3:1.

659.10 SITE PREPARATION. IN ADDITION TO "AREAS IN FRONT OF RESIDENCES, COMMERCIAL PROPERTIES, ETC." REFERRED TO IN 659.10(A), THE SPECIAL PREPARATION SHALL BE EXTENDED TO ENCOMPASS ALL LAWNS AND/OR LAWN-LIKE AREAS AS DETERMINED BY THE ENGINEER. REMOVE ALL STONES 1-INCH OR GREATER BY APPROVED METHODS/EQUIPMENT SUCH AS ROCK HOUNDING, RAKING, ETC.

659.11 PLACING TOPSOIL. TOPSOIL SHALL BE PLACED AND SPREAD TO A MINIMUM COMPACTED DEPTH OF TWO (2) INCHES ON ALL PERMANENTLY SEEDED AREAS. THE FINISHED TOPSOIL SURFACES SHALL BE SEEDED AND MULCHED WITHIN SEVENTY-TWO (72) HOURS OF THEIR ACCEPTED COMPLETION.

659.13 MULCHING OPERATION. UNLESS OTHERWISE DIRECTED OR APPROVED BY THE ENGINEER, STRAW MULCH (PER 659.14) OR COMPOST MULCH (PER 659.16) SHALL BE USED.

659.17 WATERING. IN ADDITION TO THE REQUIREMENTS OF 659.17, THE SEED BED SHALL BE KEPT ACCEPTABLY MOIST UNTIL THE SEED HAS GERMINATED; ALL AT THE DIRECTION OR APPROVAL OF THE ENGINEER.

659.23 PERFORMANCE. THE COUNTY WILL INSPECT ALL SEEDED AREAS NO EARLIER THAN ONE (1) MONTH AND NO LATER THAN NINE (9) MONTHS AFTER FINAL/COMPLETED SEEDING; ALL AT THE DISCRETION/DETERMINATION OF THE ENGINEER.

659.24 METHOD OF MEASUREMENT. SEEDING AND MULCHING SHALL BE APPLIED TO ALL AREAS OF EXPOSED SOIL BETWEEN THE RIGHT-OF-WAY LINES, AND WITHIN THE CONSTRUCTION LIMITS FOR AREAS OUTSIDE THE RIGHT-OF-WAY LINES COVERED BY WORK AGREEMENT OR SLOPE EASEMENT. QUANTITY CALCULATIONS FOR ITEM 659 - SEEDING AND MULCHING, AS PER PLAN ARE BASED ON THESE LIMITS.

659.25 BASIS OF PAYMENT. PAYMENT FOR THIS WORK SHALL BE MADE AT THE CONTRACT UNIT PRICE BID FOR THE ACTUALLY COMPLETED AND ACCEPTED QUANTITIES OF:

ITEM 659 - SEEDING AND MULCHING, AS PER PLAN	SY
ITEM 659 - TOPSOIL	CY
ITEM 659 - COMMERCIAL FERTILIZER	TON
ITEM 659 - LIME	ACRE
ITEM 659 - WATER	MGAL
ITEM 659 - MOWING	MSF

THE FOLLOWING ESTIMATED QUANTITIES ARE PROVIDED TO PROMOTE GROWTH AND CARE OF PERMANENT SEEDED AREAS IN ACCORDANCE WITH THE SPECIFICATIONS:

ITEM 659 - SEEDING & MULCHING, AS PER PLAN	2930	SY
ITEM 659 - TOPSOIL	300	CY
ITEM 659 - REPAIR SEEDING AND MULCHING	130	SY
ITEM 659 - COMMERCIAL FERTILIZER	0.35	TON
ITEM 659 - LIME	0.06	ACRE
ITEM 659 - WATER	16	MGAL

THE FOLLOWING ESTIMATED QUANTITIES ARE PROVIDED TO PROMOTE GROWTH AND CARE OF TEMPORARY/MAINTENANCE OF TRAFFIC SEEDED AREAS IN ACCORDANCE WITH THE SPECIFICATIONS:

ITEM 659 - SEEDING & MULCHING, AS PER PLAN	1638	SY
ITEM 659 - REPAIR SEEDING AND MULCHING	90	SY
ITEM 659 - WATER	11	MGAL
ITEM 659 - MOWING	15.5	MSF

ITEM 832 - EROSION CONTROL

THE FOLLOWING ESTIMATED QUANTITY IS PROVIDED FOR TEMPORARY SEDIMENT AND EROSION CONTROL (TSEC) IN ACCORDANCE WITH THE APPLICABLE REQUIREMENTS OF ODOT SUPPLEMENTAL SPECIFICATION 832:

ITEM 832 - EROSION CONTROL 60,000 EACH

UNLESS OTHERWISE APPROVED BY THE ENGINEER, DAMAGED FILTER FABRIC FENCE SHALL BE REPLACED IN LIEU OF ANY/ALL METHODS OF REPAIR.

SUPPLEMENTAL SPECIFICATION 832 - TEMPORARY SEDIMENT AND EROSION CONTROL

INFORMATION RECORDED UTILIZING SWPPPTRACK LTIS INSPECTION SOFTWARE REQUIRED PER SUPPLEMENTAL SPECIFICATION 832 SHALL BE PROVIDED TO THE CITY OF INDEPENDENCE AND THE VILLAGE OF VALLEY VIEW WITHIN SEVEN (7) DAYS OF THE INSPECTION. INFORMATION SHALL BE SUBMITTED TO THE FOLLOWING INDIVIDUALS:

CITY OF INDEPENDENCE, CITY ENGINEER
RAMMDO@INDEPENDENCEOHIO.ORG

VILLAGE OF VALLEY VIEW, VILLAGE ENGINEER
PDEY@DBOHNING.COM

ANY COSTS ASSOCIATED WITH PROVIDING THIS INFORMATION SHALL BE CONSIDERED INCIDENTAL TO THE PERTINENT 832 PAY ITEMS.

CALCULATED VLE CHECKED JTP

GENERAL NOTES

CUY - OLD ROCKSIDE ROAD

P:\PR57030\Cadd\Sheets\ORR_91563_GN004.dwg 02-Sep-21 5:54 PM

ENVIRONMENTAL

MAINTENANCE OF RIVER TRAFFIC

THE DIVISION OF PARKS AND WATERCRAFT HAS DESIGNATED THE CUYAHOGA RIVER WITHIN THE PROJECT AREA AS A STATE WATER TRAIL.

THE CUYAHOGA RIVER WILL REMAIN OPEN TO BOATING TRAFFIC, AS FEASIBLY AND SAFELY AS POSSIBLE, DURING CONSTRUCTION ACTIVITIES TO REDUCE IMPACTS UPON RECREATIONAL ACTIVITIES. CONTACT INFORMATION FOR A LOCAL CANOE LIVERY CAN BE FOUND BELOW:

RIVER CRUISER KAYAKING
4002 JENNINGS ROAD, CLEVELAND, OH 44109
RIVERCRUISERKAYAKING.COM
PHONE: (440) 539-6611

WRITTEN NOTIFICATION MUST BE PROVIDED TO THE LIVERY 14 CALENDAR DAYS PRIOR TO ANY CHANGES AFFECTING RECREATIONAL BOATING TRAFFIC. COPIES OF THE NOTIFICATION SHALL BE PROVIDED TO THE PROJECT ENGINEER.

APPROPRIATE SIGNAGE/BUOYS/MARKERS SHOULD BE PLACED 300 FEET UPSTREAM AND 300 FEET DOWNSTREAM OF THE PROJECT AREA TO ALERT USER OF CONSTRUCTION ACTIVITY.

SIGNAGE SHOULD BE COORDINATED WITH THE OHIO & ERIE CANAL TOWPATH TRAIL LOCK 39 TRAILHEAD ACCESS ALERTING BOATERS OF THE PROJECT OCCURRING DOWNSTREAM, INCLUDE INFORMATION ABOUT THE DURATION OF ANY CLOSURES THAT WOULD IMPACT RECREATION. THE ODNR DIVISION OF PARKS AND WATERCRAFT CAN ASSIST WITH ANY NECESSARY COORDINARION/COMMUNICATION IF NEEDED. ODNR DIVISION OF PARKS AND WATERCRAFT CAN BE REACHED AT 614-265-6466.

THE ODNR DIVISION OF PARKS AND WATERCRAFT MUST BE NOTIFIED AT LEAST TWO (2) WEEKS IN ADVANCE OF CONSTRUCTION TO POST NOTICE OF THE IMPENDING PROJECT ON ODNR'S ONLINE BOATING WEBPAGE AND ASSOCIATED MAPS. COORDINATION AND NOTIFICATION MUST BE THROUGH ODNR USING THE CONTACT INFORMATION PREVIOUSLY LISTED IN THIS NOTE.

IF ON-THE-WATER LAW ENFORCEMENT IS NEEDED DURING ANY PORTION OF THE CONSTRUCTION ACTIVITIES, THE CITY OF INDEPENDENCE SHALL CONTACT THE ODNR DIVISION OF PARKS AND WATERCRAFT LAW ENFORCEMENT SUPERVISOR, CHUCK STIVER, AT CHARLES.STIVER@DNR.STATE.OH.US OR (216) 361-1212.

ALL WORK ASSOCIATED WITH THIS ITEM SHALL BE INCLUDED IN THE LUMP SUM CONTRACT PRICE FOR ITEM 614 - MAINTAINING TRAFFIC, AS PER PLAN.

PROVIDE THE CONSTRUCTION SCHEDULE TO ODNR 30 DAYS PRIOR TO THE START OF CONSTRUCTION ACTIVITIES.

TREE REMOVAL AND ENDANGERED SPECIES RESTRICTIONS

THIS PROJECT IS LOCATED WITHIN THE KNOWN HABITAT RANGES OF THE FEDERALLY LISTED AND PROTECTED INDIANA BAT, NORTHERN LONG-EARED BAT, TRI-COLOR BAT AND LITTLE BROWN BAT. NO TREES SHALL BE REMOVED UNDER THIS PROJECT FROM APRIL 1 TO SEPTEMBER 30. ALL NECESSARY TREE REMOVAL SHALL ONLY OCCUR FROM OCTOBER 1 TO MARCH 31. THIS REQUIREMENT IS NECESSARY TO AVOID AND MINIMIZE IMPACTS TO THESE SPECIES AS REQUIRED BY THE ENDANGERED SPECIES ACT. FOR THE PURPOSES OF THIS NOTE, A TREE IS DEFINED AS A LIVE, DYING, OR DEAD WOODY PLANT WITH A TRUNK THAT IS THREE INCHES (3") OR GREATER IN DIAMETER AT A HEIGHT OF 4.5 FEET ABOVE THE GROUND SURFACE, AND WITH A MINIMUM HEIGHT OF 13 FEET. DEMARCATE CLEARING LIMITS IN THE FIELD TO AVOID ANY UNAUTHORIZED TREE CLEARING.

ADDITIONALLY, ALL EXISTING BRIDGE OR CULVERT STRUCTURES WITHIN THE LIMITS OF THE PROJECT SHALL BE CAREFULLY EXAMINED FOR THE PRESENCE OF THE INDIANA BAT, NORTHERN LONG-EARED BAT, TRI-COLORED BAT, AND LITTLE BROWN BAT 60 DAYS PRIOR TO DEMOLITION IN ACCORDANCE WITH APPENDIX D OF BRIDGE STRUCTURE ASSESSMENT GUIDANCE FEDERAL TRANSPORTATION/STATE DEPARTMENT OF TRANSPORTATION (DOT) PRELIMINARY BAT ASSESSMENT GUIDELINES FOR BRIDGES AND STRUCTURES. THE PERSON(S) CONDUCTING THE INSPECTION MUST BE CAPABLE OF IDENTIFYING BATS. INSPECTION USING BINOCULARS FROM THE GROUND IS ACCEPTABLE. PROVIDE WRITTEN CONFIRMATION OF THE INSPECTION TO THE ENGINEER, INCLUDING A STATEMENT INDICATING WHETHER EVIDENCE OF ROOSTING BATS WAS FOUND. IF NO EVIDENCE OF ROOSTING BATS WERE ENCOUNTERED, CONSTRUCTION ACTIVITIES CAN PROCEED ANY TIME OF THE YEAR. IF ROOSTING BATS WERE ENCOUNTERED WITHIN THE PROPOSED WORK AREA, CONTACT THE ENGINEER AND ODOT DISTRICT ENVIRONMENTAL COORDINATOR (MARK CARPENTER, 216-584-2089) IMMEDIATELY. CONSTRUCTION ACTIVITIES CAN OCCUR ONLY BETWEEN OCTOBER 31 AND MARCH 31 UNLESS THE CONTRACTOR BLOCKS ACCESS TO PORTIONS OF THE BRIDGE THAT COULD BECOME ROOSTING LOCATIONS PRIOR TO APRIL 1. THESE AREAS INCLUDE: VERTICAL CREVICES SEALED AT THE TOP, 0.5" - 1.25" WIDE, AND 4" DEEP, CREVICES >12" DEEP AND NOT SEALED, EXPANSION JOINTS, AND SPACES BETWEEN CONCRETE END WALLS AND THE BRIDGE DECK. PROVIDE WRITTEN CONFIRMATION TO THE ENGINEER INCLUDING A STATEMENT INDICATING MEASURES TAKEN TO BLOCK ACCESS TO ROOSTING LOCATIONS.

CUYAHOGA COUNTY IS ALSO POTENTIAL HABITAT FOR THE KIRTLAND'S WARBLER, A FEDERALLY ENDANGERED SONGBIRD THAT NESTS IN YOUNG JACK PINE STANDS AND FORAGES IN SHRUB/SCRUB OR FORESTED HABITAT NEAR STREAM BANKS AND THE SHORELINES OF LAKE ERIE. PRESENCE OF THE KIRTLAND'S WARBLER IS NOT EXPECTED WITHIN THE LIMITS OF THE PROJECT; HOWEVER, ANY IDENTIFIABLE HABITAT FOR THE KIRTLAND'S WARBLER SHALL NOT BE CLEARED BETWEEN APRIL 22 AND JUNE 1, AND BETWEEN AUGUST 15 AND OCTOBER 15 WHEN THE SONGBIRD MAY BE PRESENT.

CUYAHOGA COUNTY IS ALSO POTENTIAL HABITAT FOR THE PIPING PLOVER, A FEDERALLY ENDANGERED SHOREBIRD THAT NESTS ON WIDE, FLAT, OPEN, SNADY STREAM BANKS AND BEACHES ALONG THE SHORELINES OF LAKE ERIE. PRESENCE OF THE PIPING PLOVER IS NOT EXPECTED WITHIN THE LIMITS OF THE PROJECT; HOWEVER, EFFORTS SHALL BE MADE TO PROTECT ANY IDENTIFIABLE HABITAT DISCOVERED AT THE PROJECT SITE.

PER SECTION 1533.324 OF THE OHIO REVISED CODE, ALL MUSSELS NATIVE TO THE STATE OF OHIO, INCLUDING CUYAHOGA COUNTY, ARE PROTECTED, INCLUDING TEN SPECIES THAT ARE FEDERALLY PROTECTED BY THE ENDANGERED SPECIES ACT (87 STATUTE 884, AS AMENDED; 16 UNITED STATES CODE. 1531 ET SEQ.). THE PRESENCE OF MUSSELS IN ANY BODY OF WATER WITHIN THE LIMITS OF THE PROJECT IS NOT EXPECTED; HOWEVER, IMPACTS TO STATE AND FEDERALLY PROTECTED MUSSELS AND THEIR HABITATS SHOULD BE AVOIDED OR MINIMIZED TO THE MAXIMUM EXTENT PRACTICABLE.

ADDITIONAL INFORMATION FOR ANY OF THE ABOVE PROTECTED AND ENDANGERED SPECIES CAN BE FOUND ON THE WEBSITES FOR THE OHIO DEPARTMENT OF NATURAL RESOURCES (WWW2.OHIODNR.GOV), THE OHIO EOLOGICAL SERVICES FIELD OFFICE (WWW.FWS.GOV/MIDWEST/OHIO), AND THE UNITED STATES FISH AND WILDLIFE SERVICE (WWW.FWS.GOV).

DRAINAGE

UNRECORDED STORM WATER DRAINAGE CONNECTIONS

UNRECORDED STORM WATER DRAINAGE CONNECTIONS, SUCH AS EXISTING ROOF DRAINS, FOOTER DRAINS OR YARD DRAINS, DISTURBED BY THE WORK, SHALL BE PROVIDED WITH UNOBSTRUCTED OUTLETS BY CONNECTING A CONDUIT INTO A STORM SEWER OR DRAINAGE STRUCTURE. THE LOCATION, TYPE, SIZE AND GRADE OF THE NEW CONDUIT REQUIRED TO REPLACE OR EXTEND THE EXISTING DRAIN WILL BE DETERMINED BY THE ENGINEER.

THE FOLLOWING CONDUIT TYPES MAY BE USED: 706.01 (CLASS 3) OR 706.02 WITH 706.11 JOINTS, 706.08 (EXTRA STRENGTH) WITH 706.12 JOINTS, 707.42, 707.43, 707.45, 707.47, 707.51 or 707.52 SDR35.

THE FOLLOWING ESTIMATED QUANTITIES HAVE BEEN INCLUDED IN THE GENERAL SUMMARY FOR USE AS DIRECTED BY THE ENGINEER FOR THE WORK NOTED ABOVE:

ITEM 611 - CONDUIT, MISC.: 6" CONDUIT, TYPE B, FOR DRAINAGE CONNECTION, AS PER PLAN 50 FT.

ITEM 611 - CONDUIT, MISC.: 6" CONDUIT, TYPE C, FOR DRAINAGE CONNECTION, AS PER PLAN 50 FT.

WHEN ENCOUNTERED WITHIN THE SAME TRENCH, THE COST FOR REMOVAL AND DISPOSAL OF THE EXISTING CONDUIT SHALL BE INCLUDED IN THE PAYMENT FOR THE PERTINENT 611 ITEM LISTED ABOVE.

REVIEW OF DRAINAGE FACILITIES

BEFORE ANY WORK IS STARTED ON THE PROJECT AND AGAIN BEFORE FINAL ACCEPTANCE BY THE COUNTY, REPRESENTATIVES OF THE COUNTY AND THE CONTRACTOR, ALONG WITH LOCAL REPRESENTATIVES, SHALL MAKE AN INSPECTION OF ALL EXISTING SEWERS WHICH ARE TO REMAIN IN SERVICE AND WHICH MAY BE AFFECTED BY THE WORK. THE CONDITION OF THE EXISTING CONDUITS AND THEIR APPURTENANCES SHALL BE DETERMINED FROM FIELD OBSERVATIONS AND VIDEO RECORDING. RECORDS OF THE INSPECTION SHALL BE KEPT IN WRITING BY THE COUNTY.

ALL NEW CONDUITS, INLETS, CATCH BASINS, AND MANHOLES CONSTRUCTED AS A PART OF THE PROJECT SHALL BE FREE OF ALL FOREIGN MATTER AND IN A CLEAN CONDITION BEFORE THE PROJECT WILL BE ACCEPTED BY THE COUNTY.

ALL EXISTING SEWERS INSPECTED INITIALLY BY THE ABOVE-MENTIONED PARTIES SHALL BE MAINTAINED AND LEFT IN A CONDITION REASONABLY COMPARABLE TO THAT DETERMINED BY THE ORIGINAL INSPECTION. ANY CHANGE IN THE CONDITION RESULTING FROM THE CONTRACTOR'S OPERATIONS SHALL BE CORRECTED BY THE CONTRACTOR TO THE SATISFACTION OF THE ENGINEER.

PAYMENT FOR ALL OPERATIONS DESCRIBED ABOVE SHALL BE INCLUDED IN THE CONTRACT PRICE FOR THE PERTINENT 611 CONDUIT OR 611 STRUCTURE ITEMS.

ITEM SPECIAL - MISCELLANEOUS METAL

THE ENGINEER SHALL INSPECT THE EXISTING CASTINGS ON ALL STRUCTURES WITHIN THE WORK LIMITS, EXCEPTING CASTINGS ON STRUCTURES OWNED BY PRIVATE COMPANIES AND CASTINGS ON STRUCTURES TO BE REMOVED AND/OR REPLACED. THOSE CASTINGS THAT THE ENGINEER DETERMINES ARE UNSUITABLE SHALL BE REPLACED. TO PROVIDE FOR THIS CONTINGENCY, AN ESTIMATED QUANTITY OF ITEM SPECIAL - MISCELLANEOUS METAL HAS BEEN INCLUDED IN THE GENERAL SUMMARY TO BE USED AS DIRECTED BY THE ENGINEER. IT SHALL BE THE CONTRACTOR'S RESPONSIBILITY TO PROVIDE THE CASTINGS OF THE REQUIRED TYPE, SIZE AND STRENGTH (HEAVY DUTY) FOR THE PARTICULAR STRUCTURE IN QUESTION. ALL CASTING MATERIALS SHALL CONFORM TO ITEM 611 OR ITEM 638, IF APPLICABLE, AND HAVE THE PRIOR APPROVAL OF THE ENGINEER.

WHERE IT IS NECESSARY TO REPLACE UNSUITABLE STORM/SANITARY SEWER MANHOLE CASTINGS (FRAMES AND COVERS), THEY SHALL BE REPLACED USING CUYAHOGA COUNTY NO. 9 FRAMES AND EITHER NO. 28 COVERS (OR NO.28 SANITARY COVERS FOR SANITARY OR COMBINED SEWERS) OR NO. 37 COVERS, AS DETAILED ON THE CUYAHOGA COUNTY ENGINEER'S CONSTRUCTION DRAWINGS MH-10C AND MH-11C.

WHERE THE ENGINEER DETERMINES CATCH BASIN GRATES ENCOUNTERED WITHIN THE WORK ARE NON-BICYCLE/PEDESTRIAN SAFE, THEY SHALL BE REMOVED AND REPLACED WITH THE APPROPRIATE BICYCLE / PEDESTRIAN SAFE GRATES AS AVAILABLE AND RECOMMENDED BY THE VARIOUS CASTING MANUFACTURERS AND APPROVED BY THE ENGINEER.

REGARDLESS OF THEIR CONDITION, ALL EXISTING CUYAHOGA COUNTY 3C CATCH BASIN FRAMES AND GRATES SHALL BE EXAMINED BY THE ENGINEER TO DETERMINE THAT THEY ARE OF THE TYPE SPECIFIED ON THE CUYAHOGA COUNTY ENGINEER'S CONSTRUCTION DRAWING CB-3C (FOUR-SIDED BEARING FRAME AND BICYCLE/PEDESTRIAN SAFE GRATE). ANY THAT ARE NOT SHALL BE REPLACED AND PAID FOR UNDER THIS ITEM.

WHERE ENCOUNTERED/DISTURBED DURING CATCH BASIN RECONSTRUCTION, EXISTING CAST IRON TRAPS SHALL TYPICALLY BE REUSED. IF, IN THE OPINION OF THE ENGINEER, THE EXISTING TRAP IS UNSUITABLE FOR REUSE, THE CONTRACTOR SHALL REPLACE IT. SEE THE CUYAHOGA COUNTY ENGINEER'S CONSTRUCTION DRAWING CB-3C S/T FOR APPROPRIATE CAST IRON TRAP TO BE USED ON CUYAHOGA COUNTY NO. 3C CATCH BASINS.

THE CONTRACTOR IS CAUTIONED TO USE EXTREME CARE IN THE REMOVAL, CLEANING, STORAGE AND RESETTING OF ALL EXISTING CASTINGS. CASTINGS DAMAGED BY THE NEGLIGENCE OF THE CONTRACTOR, AS DETERMINED BY THE ENGINEER, SHALL BE REPLACED WITH THE PROPER NEW CASTINGS AT THE CONTRACTOR'S EXPENSE.

EXCEPT WHERE/IF SPECIFICALLY REQUIRED AND SO SPECIFIED ELSEWHERE IN THE PLANS, THE CONTRACTOR SHALL NOT ORDER ANY OF THE ABOVE CASTINGS UNTIL DIRECTED BY THE ENGINEER, AND IN THE EVENT NO REPLACEMENT CASTINGS ARE REQUIRED, THE ITEM SHALL BE NONPERFORMED.

ALL COST ASSOCIATED WITH FURNISHING ACCEPTABLE NEW CASTING MATERIALS SHALL BE INCLUDED UNDER THIS ITEM. IN ADDITION, THE COST FOR SIMPLY INSTALLING NEW GRATES/COVERS ONLY SHALL BE CONSIDERED INCIDENTAL TO THIS ITEM. ALL COST ASSOCIATED WITH SETTING NEW CASTINGS (FRAMES AND COVERS/GRATES) TO GRADE SHALL BE INCLUDED IN THE UNIT PRICE BID FOR THE PERTINENT STRUCTURE (611) "ADJUSTED TO GRADE, AS PER PLAN" OR "RECONSTRUCTED TO GRADE, AS PER PLAN".

THE FOLLOWING ESTIMATED QUANTITY HAS BEEN CARRIED TO THE GENERAL SUMMARY FOR USE AS DIRECTED BY THE ENGINEER:

ITEM SPECIAL - MISCELLANEOUS METAL 5,000 LB

CALCULATED VLE CHECKED JTP

GENERAL NOTES

CUY - OLD
ROCKSIDE ROAD

P:\PR57030\Cadd\Sheets\ORR_91563_GN005.dwg 18-Nov-21 3:13 PM

GENERAL NOTES

STRUCTURES ADJUSTED TO GRADE, AS PER PLAN; RECONSTRUCTED TO GRADE, AS PER PLAN; OR REPLACED

ALL ADJUSTMENT, RECONSTRUCTION OR REPLACED WORK, EXCEPT FOR THOSE STRUCTURES OWNED BY PRIVATE COMPANIES, SHALL BE PERFORMED BY THE CONTRACTOR. WHERE APPLICABLE, THE TIME BETWEEN RESETTING THE CASTINGS AND RESURFACING SHALL BE KEPT TO AN ABSOLUTE MINIMUM.

EXCEPT AS NOTED BELOW FOR EXISTING PRECAST SANITARY SEWER MANHOLES, ALL PUBLICALLY OWNED CASTINGS SHALL BE ADJUSTED OR RECONSTRUCTED TO GRADE IN ACCORDANCE WITH 611.10 USING ALL RED CLAY BRICKS (704.01), CLASS QC 1 CONCRETE (511) AND/OR CONCRETE MORTAR (602), OR PER 638.18 AND AS SPECIFIED BELOW FOR SERVICE BOX AND VALVE BOX ADJUSTMENTS. EXCEPT FOR EXISTING PRECAST SANITARY SEWER MANHOLES, NO GRADE RINGS OR METAL ADJUSTING RINGS (CASTINGS) ARE PERMITTED. MAXIMUM CONCRETE MORTAR THICKNESS IS 1-1/2".

EXISTING PRECAST SANITARY SEWER MANHOLES SHALL BE RECONSTRUCTED TO GRADE USING A FOUR (4) INCH MINIMUM TO TWELVE (12) INCH MAXIMUM DEPTH OF EXISTING AND/OR PROPOSED GRADE RINGS (706.13) IN LIEU OF BRICK OR CLASS QC 1 CONCRETE. GROUT BETWEEN GRADE RINGS AND ON THE OUTSIDE OF THE GRADE RINGS. SET THE MANHOLE FRAME IN A FINISHED MORTAR BED WITH A FLUSH MORTAR JOINT. WHERE NECESSARY, RECONSTRUCTION WORK SHALL BE ACCOMPLISHED BY THE REMOVAL AND/OR ADDITION OF FOUR (4) FOOT DIAMETER PRECAST MANHOLE RISER SECTIONS (706.13). IN ADDITION, APPROVED CHIMNEY SEALS SHALL BE INSTALLED AFTER THE EXISTING PRECAST SANITARY SEWER MANHOLES HAVE BEEN RECONSTRUCTED TO GRADE.

THE CONTRACTOR SHALL RESET EXISTING VALVE BOXES OR EXISTING CURB SHUT-OFF VALVE BOXES TO ESTABLISHED GRADE BY RAISING OR LOWERING THE EXISTING CASTINGS OR BY EITHER ADDING, DELETING OR CUTTING THE APPROPRIATE VALVE BOX STEM SECTIONS. IN RAISING OF THE CASTINGS, NO INSERTS WILL BE PERMITTED. ANY VALVE BOXES OR CURB SHUT-OFF VALVE BOXES FOUND TO BE DAMAGED OR UNSUITABLE FOR REUSE SHALL BE REPLACED BY THE CONTRACTOR AND PAID FOR UNDER ITEM SPECIAL - MISCELLANEOUS METAL. THE CONTRACTOR SHALL PERFORM ALL WORK NECESSARY AS REQUIRED OR AS ORDERED TO COMPLETE THE ITEM.

ADJUST TO GRADE, RECONSTRUCT TO GRADE OR TOTAL REPLACEMENT WORK SHALL, WHERE REQUIRED, INCLUDE THE REMOVAL AND REPLACEMENT OF ANY EXISTING CONCRETE BLOCKOUT CURB AND/OR PAVEMENT USING MEDIUM SET (CLASS QC MS) CONCRETE OR, IF APPROVED/DIRECTED BY THE ENGINEER, FAST SET (CLASS QC FS) CONCRETE PER 499.03 OF THE SPECIFICATIONS AND THE "MODIFICATIONS TO ITEM 499 CONCRETE - GENERAL" AS CONTAINED IN THE "SECTION 400 PROPOSAL NOTES" OF THE CUYAHOGA COUNTY ENGINEER SPECIFICATION BOOKLET. TO FACILITATE REMOVAL, THE BLOCKOUT PAVEMENTS SHALL BE SAWED FULL DEPTH (PER 255.03) ALONG THE LIMITS OF THEIR REMOVAL UNLESS OTHERWISE DESIGNATED/DIRECTED BY THE ENGINEER. UNLESS OTHERWISE APPROVED/DIRECTED BY THE ENGINEER, BLOCKOUT PAVEMENT, REINFORCING STEEL, JOINT MATERIAL AND LOAD TRANSFER DEVICES SHALL BE REPLACED / INSTALLED IN ACCORDANCE WITH THE CUYAHOGA COUNTY ENGINEER'S CONSTRUCTION DRAWING(S) BP-2.7C (MANHOLES) AND CB-3C OR OTHER APPROPRIATE CATCH BASIN DRAWING(S). UNLESS OTHERWISE DIRECTED/APPROVED BY THE ENGINEER, REPLACE EXCAVATED SUBBASE AND SUBGRADE MATERIALS BELOW THE PROPOSED BLOCKOUT PAVEMENT WITH "ITEM 613-LOW STRENGTH MORTAR BACKFILL (TYPE 1), AS PER PLAN" EXCEPT THE USE OF FOUNDRY SAND IS STRICTLY PROHIBITED. SEE THE "ITEM 613 - LOW STRENGTH MORTAR BACKFILL (TYPE 1), AS PER PLAN" PROPOSAL NOTE CONTAINED IN SECTION 400 OF THE "CUYAHOGA COUNTY ENGINEER SPECIFICATION BOOKLET." ALL COSTS ASSOCIATED WITH THE BLOCKOUT REMOVALS/REPLACEMENTS SHALL BE CONSIDERED INCIDENTAL TO THE PER EACH BID ITEMS.

ALL EXISTING CASTINGS FOR STRUCTURES TO BE ADJUSTED OR RECONSTRUCTED TO GRADE SHALL BE FIELD CHECKED AT THE TIME OF CONSTRUCTION AND MARKED SUITABLE FOR SALVAGE AND REUSE OR REPLACED AS DIRECTED BY THE ENGINEER. UNLESS OTHERWISE INDICATED ON THE PLAN, REPLACEMENT CASTINGS ARE PAID UNDER ITEM SPECIAL - MISCELLANEOUS METAL.

THE ENGINEER WILL DETERMINE THE ITEM 611 WORK REQUIRED BASED ON THE GUIDELINES STIPULATED BELOW:

1. "ADJUST TO GRADE, AS PER PLAN" SHALL INCLUDE ALL WORK SPECIFIED IN 611.10 (D) AS NECESSARY TO RAISE THE EXISTING/NEW CASTING NO MORE THAN ONE (1) FOOT FROM ITS EXISTING ELEVATION OR TO LOWER THE EXISTING/NEW CASTING NO MORE THAN SIX (6) INCHES FROM ITS EXISTING ELEVATION. IN ADDITION, THIS ITEM WILL INCLUDE ANY SUPPORTING WALL REPAIR WORK NECESSARY, UP TO SIX (6) INCHES BELOW THE TOP OF THE EXISTING SUPPORTING WALL.

   PAYMENT SHALL BE MADE UNDER THE APPROPRIATE STRUCTURE (ITEM 611) ADJUSTED TO GRADE, AS PER PLAN.

2. "RECONSTRUCT TO GRADE, AS PER PLAN" SHALL INCLUDE ALL WORK SPECIFIED IN 611.10 (C) AND SHALL ALSO INCLUDE EXISTING/NEW CASTINGS RAISED MORE THAN ONE (1) FOOT FROM THEIR EXISTING ELEVATION OR LOWERED MORE THAN SIX (6) INCHES FROM THEIR EXISTING ELEVATION.

   THE WORK LIMIT SHALL BE SPECIFIED BY THE ENGINEER AND PAYMENT SHALL BE MADE UNDER THE APPROPRIATE STRUCTURE (ITEM 611) RECONSTRUCTED TO GRADE, AS PER PLAN.

ONLY ONE (1) OF THE ABOVE PAYMENT ITEMS MAY BE USED PER STRUCTURE.

"RECONSTRUCT TO GRADE, AS PER PLAN" WORK SHALL NOT BE PERFORMED UNLESS SPECIFICALLY INDICATED IN THE PLANS OR OTHERWISE ORDERED BY THE ENGINEER. ANY SUCH WORK MADE NECESSARY DUE TO THE CONTRACTOR'S NEGLIGENT OPERATIONS, AS DETERMINED BY THE ENGINEER, SHALL BE DONE AT THE CONTRACTOR'S EXPENSE.

THE FOLLOWING ESTIMATED QUANTITIES HAVE BEEN CARRIED TO THE GENERAL SUMMARY FOR USE AS DIRECTED BY THE ENGINEER:

ITEM 611 - CATCH BASIN RECONSTRUCTED TO GRADE, AS PER PLAN	1 EACH
ITEM 611 - MANHOLE RECONSTRUCTED TO GRADE, AS PER PLAN	1 EACH
ITEM 638 - VALVE BOX ADJUSTED TO GRADE, AS PER PLAN	3 EACH

ITEM 611 - CATCH BASIN MISC.: TEMPORARY PLATE

CONTRACTOR SHALL PLACE AN APPROPRIATELY SIZED TEMPORARY METAL PLATE OVER THE EXISTING CATCH BASIN FOR TEMPORARY WORK. THIS ITEM IS INTENDED TO PAY FOR THE TEMPORARY PLATE AND THE ADDITIONAL LABOR AND MATERIALS INVOLVED TO PLACE THE TEMPORARY PLATE AND REMOVE AND DISPOSE OF THE PLATE FOLLOWING THE REMOVAL OF THE TEMPORARY EMBANKMENT.

PAYMENT FOR ALL OPERATIONS OF THE ABOVE DESCRIBED WORK SHALL BE PROVIDED PER THE UNIT PRICE BID FOR EACH ITEM 611 - CATCH BASIN MISC., TEMPORARY PLATE AND SHALL BE CONSIDERED FULL COMPENSATION FOR ALL LABOR, MATERIALS, EQUIPMENT AND INCIDENTALS NECESSARY TO COMPLETE THE WORK.

ITEM 611 - CATCH BASIN ADJUSTED TO GRADE, AS PER PLAN A

IN ADDITION TO ALL SPECIFICATIONS IN STRUCTURES ADJUSTED TO GRADE, AS PER PLAN, THE CATCH BASIN FRAME AND GRATE SHALL BE REMOVED AND REPLACED WITH A SQUARE HEAVY DUTY FRAME AND SOLID LID SIMILAR TO NENAH R-1863, EJ-5250 FRAME WITH V6622 OR 5423A LID, OR APPROVED EQUAL. FRAME AND LID SHALL BE INSTALLED FLUSH WITH THE PROPOSED CONCRETE WALK.

ITEM 611 - CATCH BASIN ADJUSTED TO GRADE, AS PER PLAN B

CONTRACTOR SHALL REMOVE AND STORE THE CURRENT CATCH BASIN CASTING (FRAME AND GRATE) AND REPLACE IT WITH A FLAT CATCH BASIN FRAME AND GRATE SIMILAR IN CONSTRUCTION TO A CB-2.3 BUT APPROPRIATELY SIZED TO THE EXISTING VAULT. THE FRAME AND GRATE SHOULD BE LOAD RATED FOR TRUCK TRAFFIC AND ADJUSTED TO GRADE FOR THE TEMPORARY WORK. AFTER COMPLETION OF TEMPORARY WORK, CONTRACTOR SHALL REMOVE THE PREVIOUSLY INSTALLED FRAME AND GRATE AND REPLACE IT WITH THE ORIGINAL CASTING, ADJUSTED TO GRADE.

THE EXISTING CASTING SHALL BE FIELD CHECKED IN ACCORDANCE WITH THE SPECIFICATIONS IN STRUCTURES ADJUSTED TO GRADE, AS PER PLAN NOTE. THE CONTRACTOR IS CAUTIONED TO USE EXTREME CARE IN THE REMOVAL, CLEANING, STORAGE AND RESETTING OF THE EXISTING CASTING. CASTING DAMAGE CAUSED BY THE NEGLIGENCE OF THE CONTRACTOR, AS DETERMINED BY THE ENGINEER, SHALL BE REPLACED WITH THE PROPER NEW CASTING AT THE CONTRACTOR'S EXPENSE.

PAYMENT FOR ALL OPERATIONS OF THE ABOVE DESCRIBED WORK SHALL BE PROVIDED PER THE UNIT PRICE BID FOR EACH ITEM 611 - CATCH BASIN ADJUSTED TO GRADE, AS PER PLAN B AND SHALL BE CONSIDERED FULL COMPENSATION FOR ALL LABOR, MATERIALS, EQUIPMENT AND INCIDENTALS NECESSARY TO COMPLETE THE WORK.

ITEM 611 - CONDUITS, AS PER PLAN
ITEM 611 - MANHOLE NO. 3, AS PER PLAN
ITEM 611 - CATCH BASIN, AS PER PLAN
ITEM 611 - INLET, AS PER PLAN

IN ADDITION TO THE REQUIREMENTS OF ITEM 611, AS SET FORTH IN THE CONSTRUCTION AND MATERIAL SPECIFICATIONS, THE FOLLOWING ADDITIONAL RESTRICTIONS SHALL BE MET FOR ITEM 611 - CONDUITS, AS PER PLAN; ITEM 611 - MANHOLE NO. 3, AS PER PLAN; AND ITEM 611 - CATCH BASIN, AS PER PLAN:

611.02 (A): USE CLASS III MINIMUM FOR REINFORCED CONCRETE CIRCULAR PIPE (706.02). USE CLASS HE-III MINIMUM FOR REINFORCED CONCRETE ELLIPTICAL PIPE (706.04).

611.02 (B): MAXIMUM ALLOWABLE SIZE FOR NON-REINFORCED CONCRETE PIPE (706.01) IS 21". USE CLASS III MINIMUM FOR REINFORCED CONCRETE CIRCULAR PIPE (706.02). USE CLASS HE-III MINIMUM FOR REINFORCED CONCRETE ELLIPTICAL PIPE (706.04). MAXIMUM ALLOWABLE SIZE FOR VITRIFIED CLAY PIPE (706.08) IS 15".

611.02 (C): USE CLASS 3 MINIMUM FOR NON-REINFORCED CONCRETE CIRCULAR PIPE (706.01) WITH A MAXIMUM ALLOWABLE SIZE OF 21". MAXIMUM ALLOWABLE SIZE FOR VITRIFIED CLAY PIPE (706.08) IS 15" AND ONLY EXTRA STRENGTH WILL BE USED.

STORM SEWER MANHOLES CONSTRUCTED FOR THIS PROJECT SHALL HAVE A CUYAHOGA COUNTY NO. 9 FRAME AND EITHER A NO. 28 COVER OR A NO. 37 COVER AS DETAILED ON THE CUYAHOGA COUNTY ENGINEER'S CONSTRUCTION DRAWINGS MH-10C AND MH-11C.

STRUCTURAL BACKFILL MATERIAL (703.11) FURNISHED FOR BEDDING AND BACKFILL OPERATIONS SHALL BE LIMITED TO CRUSHED CARBONATE STONE. ALL OTHER EMBANKMENT MATERIAL (203.02.R) FURNISHED FOR NON-STRUCTURAL BACKFILL OPERATIONS SHALL BE LIMITED TO NATURAL GRANULAR MATERIAL (203.02.H) AND RECYCLED PORTLAND CEMENT CONCRETE (RPCC). IN ADDITION TO THE REQUIREMENTS OF 703.16, THE USE OF RPCC IS SUBJECT TO THE RESTRICTIONS OF 203.03(B) AND 203.03(E). BEDDING SHALL BE PLACED AND COMPACTED PER 611.06. THE METHOD OF BACKFILLING SHALL BE PER 611.06.

AT THE DIRECTION OF THE ENGINEER AND WITH THE APPROVAL OF THE MAINTAINING AGENCY, ITEM 613 - LOW STRENGTH MORTAR BACKFILL (TYPE 2), AS PER PLAN MAY BE USED IN LIEU OF OR IN CONJUNCTION WITH THE SPECIFIED STRUCTURAL AND NON-STRUCTURAL BACKFILL MATERIAL. SEE THE "ITEM 613 - LOW STRENGTH MORTAR BACKFILL (TYPE 2), AS PER PLAN" PROPOSAL NOTE CONTAINED IN SECTION 400 OF THE "CUYAHOGA COUNTY ENGINEER SPECIFICATION BOOKLET."

PROVIDE 706.11 JOINTS FOR ALL CONCRETE PIPE (706.01, 706.02, 706.04 AND 706.05) AND FOR ALL PRECAST MANHOLE OR CATCH BASIN SECTIONS. PROVIDE 706.12 JOINTS FOR VITRIFIED CLAY PIPE (706.08 EXTRA STRENGTH).

CONTINGENCY ITEMS FOR DRAINING PONDED (TRAPPED) RUNOFF

AS A RESULT OF THE PROPOSED CONSTRUCTION, RAINWATER MAY UNEXPECTEDLY / UNAVOIDABLY POND IN A FEW SPOT LOCATIONS WITHIN THE PROJECT WORK LIMITS / EASEMENTS (i.e., TREE LAWNS, BEHIND SIDEWALK, ADJACENT TO DRIVES/APRONS, ETC.). SUITABLE PROVISIONS FOR COLLECTING, CONVEYING AND DISCHARGING ANY SUCH LOCALIZED PONDING SHALL BE AS DETERMINED / DIRECTED BY THE ENGINEER.

TO PROVIDE FOR THIS CONTINGENCY, THE FOLLOWING ESTIMATED QUANTITIES ARE PROVIDED IN THE GENERAL SUMMARY FOR USE AS DIRECTED BY THE ENGINEER:

ITEM 611 - 12" CONDUIT, TYPE B, AS PER PLAN	250 FT
ITEM 611 - INLET, SIDE DITCH, AS PER PLAN	1 EACH
ITEM 611 - CATCH BASIN, NO. 2-2B, AS PER PLAN	1 EACH

NONE OF THE ABOVE MATERIALS SHALL BE ORDERED BY THE CONTRACTOR UNTIL AUTHORIZED BY THE ENGINEER. CONTINGENCY ITEMS FOR DRAINING PONDED (TRAPPED) RUNOFF.

ITEM 605 - 6" BASE PIPE UNDERDRAINS WITH GEOTEXTILE FABRIC, AS PER PLAN

THE FOLLOWING PIPE MATERIAL TYPES MAY BE USED FOR SIX (6) INCH PERFORATED UNDERDRAIN PIPE: 706.06, 706.08, 707.31, 707.41, 707.42 (PERFORATED PER 707.31) AND 707.45 (PERFORATED PER 707.31).

THE FOLLOWING SMOOTH INTERIOR-WALLED PIPE MATERIAL TYPES MAY BE USED FOR FOUR (4) INCH PERFORATED UNDERDRAIN PIPE: 706.06, 706.08, 707.41, 707.42 (PERFORATED PER 707.31) AND 707.45 (PERFORATED PER 707.31).

THE SIZE OF UNDERDRAIN PIPE SHALL NOT BE REDUCED FROM THE SIZE SPECIFIED IN THE PLANS/PROPOSAL.

GRANULAR BACKFILL MATERIAL SHALL BE LIMITED TO LIMESTONE.

THE GEOTEXTILE FABRIC SHALL BE A NON-WOVEN OR MONOFILAMENT WOVEN GEOTEXTILE FABRIC MEETING THE REQUIREMENTS OF AASHTO M 288, TABLE 1 (CLASS 3) AND TABLE 2.

WHEN ENCOUNTERED WITHIN THE PROPOSED UNDERDRAIN TRENCH EXCAVATION, THE COST FOR REMOVAL AND DISPOSAL OF EXISTING UNDERDRAIN PIPE SHALL BE INCLUDED UNDER THIS ITEM.

SEE DETAIL ON THE CUYAHOGA COUNTY ENGINEER'S CONSTRUCTION DRAWING MD-1C.

P:\PR57030\Cadd\Sheets\ORR_91563_GN006.dwg 02-Sep-21 5:55 PM

PAVEMENT

ITEMS 302 AND 441, PG 64-22, AS PER PLAN

USE OF RECLAIMED ASPHALT CONCRETE PAVEMENT IS LIMITED TO A MAXIMUM OF 10% FOR SURFACE COURSES. USE OF RECLAIMED ASPHALT SHINGLES ARE NOT PERMITTED IN ANY ASPHALT CONCRETE COURSE.

THE COARSE AGGREGATE SHALL BE CRUSHED CARBONATE STONE (CCS) AND/OR CRUSHED AIR COOLED BLAST FURNACE SLAG (ACBFS).

PRIOR TO PRODUCING THE ASPHALT CONCRETE FOR THIS CONTRACT, SUBMIT A JOB MIX FORMULA (JMF) FOR APPROVAL BY THE ENGINEER. USE A JMF THAT MEETS ALL REQUIREMENTS ESTABLISHED IN THE CONTRACT AND HAS PREVIOUSLY BEEN APPROVED FOR USE ON ODOT WORK. WHERE NO PREVIOUSLY APPROVED (BY ODOT) JMF IS AVAILABLE, DEVELOP A JMF MEETING ALL CRITERIA ESTABLISHED IN THE CONTRACT AND HAVE IT REVIEWED AND APPROVED BY AN INDEPENDENT TESTING LABORATORY PRIOR TO SUBMISSION TO THE ENGINEER. THE INDEPENDENT TESTING LABORATORY SHALL HAVE APPROPRIATELY APPROVED PERSONNEL AND TESTING EQUIPMENT PER ODOT SUPPLEMENT 1041. ALL COST ASSOCIATED WITH THE ABOVE SHALL BE INCLUDED IN THE CUBIC YARD COST OF THE ASPHALT CONCRETE BID ITEM(S).

SAMPLING FOR VERIFICATION ACCEPTANCE (403.06.A) SHALL BE PERFORMED IN ACCORDANCE WITH ODOT SUPPLEMENT 1035 FOR ALL ITEM 441 MIXES.

UNLESS OTHERWISE DIRECTED/APPROVED BY THE ENGINEER, CONDUCT DENSITY GAUGE QUALITY CONTROL TESTING ON BOTH THE ITEM 441 ASPHALT CONCRETE SURFACE COURSE AND INTERMEDIATE COURSE MATS ACCORDING TO ODOT SUPPLEMENT 1055 REGARDLESS OF THE NUMBER OF LANES OR LENGTH OF CONTINUOUS PAVING.

ITEM 441 - ASPHALT CONCRETE SURFACE COURSE, TYPE 1, (448), PG 70-22M, AS PER PLAN

USE OF RECLAIMED ASPHALT CONCRETE PAVEMENT IS LIMITED TO A MAXIMUM OF 10%.

THE COARSE VIRGIN AGGREGATE SHALL BE A BLEND OF SIXTY PERCENT (60%) MINIMUM AIR COOLED BLAST FURNACE SLAG (ACBFS) OR TRAP ROCK FROM ONTARIO WITH THE REMAINING PERCENTAGE COMPRISED OF CRUSHED CARBONATE STONE (CCS).

PRIOR TO PRODUCING THE ASPHALT CONCRETE FOR THIS CONTRACT, SUBMIT A JOB MIX FORMULA (JMF) FOR APPROVAL BY THE ENGINEER. USE A JMF THAT MEETS ALL REQUIREMENTS ESTABLISHED IN THE CONTRACT AND HAS PREVIOUSLY BEEN APPROVED FOR USE ON ODOT WORK. WHERE NO PREVIOUSLY APPROVED (BY ODOT) JMF IS AVAILABLE, DEVELOP A JMF MEETING ALL CRITERIA ESTABLISHED IN THE CONTRACT AND HAVE IT REVIEWED AND APPROVED BY AN INDEPENDENT TESTING LABORATORY PRIOR TO SUBMISSION TO THE ENGINEER. THE INDEPENDENT TESTING LABORATORY SHALL HAVE APPROPRIATELY APPROVED PERSONNEL AND TESTING EQUIPMENT PER ODOT SUPPLEMENT 1041. ALL COST ASSOCIATED WITH THE ABOVE SHALL BE INCLUDED IN THE CUBIC YARD COST OF THE ASPHALT CONCRETE BID ITEM.

SAMPLING FOR VERIFICATION ACCEPTANCE (403.06.A) SHALL BE PERFORMED IN ACCORDANCE WITH ODOT SUPPLEMENT 1035.

UNLESS OTHERWISE DIRECTED/APPROVED BY THE ENGINEER, CONDUCT DENSITY GAUGE QUALITY CONTROL TESTING ON THE ITEM 441 ASPHALT CONCRETE SURFACE COURSE MAT ACCORDING TO ODOT SUPPLEMENT 1055 REGARDLESS OF THE NUMBER OF LANES OR LENGTH OF CONTINUOUS PAVING.

ITEM 304 - AGGREGATE BASE, AS PER PLAN

MATERIAL FURNISHED FOR THIS ITEM SHALL BE LIMITED TO CRUSHED CARBONATE STONE.

AGGREGATE BASE MATERIAL MAY BE SPREAD UPON THE SUBGRADE ONLY AFTER THE PRESCRIBED SUBGRADE AND SUBBASE DRAINAGE HAS BEEN PLACED.

ITEM 254 - PAVEMENT PLANING, ASPHALT CONCRETE, AS PER PLAN

THE CONTRACTOR SHALL SCHEDULE HIS/HER OPERATIONS SUCH THAT THE PROPOSED ASPHALT CONCRETE INTERMEDIATE COURSE IS PLACED WITHIN SEVEN (7) DAYS OF THE PAVEMENT PLANING. A BEVELED EDGE SHALL BE INCORPORATED WITH THE PLANING OPERATIONS

ITEM 609 - CURB, TYPE 6, AS PER PLAN AND
ITEM 609 - CURB, TYPE 4-C, AS PER PLAN

THE "CLASS QC 1" OR "CLASS QC MISC." CONCRETE SHALL CONFORM TO THE "MODIFICATIONS TO ITEM 499 CONCRETE - GENERAL" AS CONTAINED IN THE "SECTION 400 PROPOSAL NOTES" OF THE "CUYAHOGA COUNTY ENGINEER SPECIFICATION BOOKLET".

ITEM 609 - COMBINATION CURB AND GUTTER, TYPE 2, AS PER PLAN A

THE "CLASS QC 1" OR "CLASS QC MISC." CONCRETE SHALL CONFORM TO THE "MODIFICATIONS TO ITEM 499 CONCRETE - GENERAL" AS CONTAINED IN THE "SECTION 400 PROPOSAL NOTES" OF THE "CUYAHOGA COUNTY ENGINEER SPECIFICATION BOOKLET".

CONTRACTOR SHALL TAPER THE SOUTH SIDE CURB HEIGHT FROM 8 INCHES TO 6 INCHES, OVER A DISTANCE OF 10 FEET, STARTING AT THE EAST END OF THE FORWARD APPROACH SLAB.

THE CONTRACTOR SHALL TAPER THE SOUTH SIDE CURB HEIGHT FROM 2 INCHES AS IT PASSES THROUGH THE CVSR PARK DRIVE TO 8 INCHES PRIOR TO CATCH BASIN "D8" AT STATION 30+32, RIGHT

ITEM 609 - COMBINATION CURB AND GUTTER, TYPE 2, AS PER PLAN B
ITEM 609 - COMBINATION CURB AND GUTTER, TYPE 3, AS PER PLAN

THE "CLASS QC 1" OR "CLASS QC MISC." CONCRETE SHALL CONFORM TO THE "MODIFICATIONS TO ITEM 499 CONCRETE - GENERAL" AS CONTAINED IN THE "SECTION 400 PROPOSAL NOTES" OF THE "CUYAHOGA COUNTY ENGINEER SPECIFICATION BOOKLET".

CONTRACTOR SHALL CONSTRUCT COMBINATION CURB AND GUTTER PER ITEM 609 AND SCD BP-5.1, ALTERING GUTTER WIDTH TO 18" FROM FACE OF CURB TO EDGE OF PAVEMENT. PAYMENT FOR ALL MATERIALS, LABOR, EQUIPMENT, AND TOOLS NECESSARY FOR CONSTRUCTION OF CURB AND GUTTER AND INCIDENTALS WILL BE PAID UNDER ITEM 609 - COMBINATION CURB AND GUTTER, TYPE 2, AS PER PLAN B AND ITEM 609 - COMBINATION CURB AND GUTTER, TYPE 3, AS PER PLAN.

WATERWORK

ALL WATERWORK SHALL BE IN ACCORDANCE WITH THE STANDARD SPECIFICATIONS AND DRAWINGS OF THE CITY OF CLEVELAND, DEPARTMENT OF PUBLIC UTILITIES, DIVISION OF WATER (CWD), 1201 LAKESIDE AVENUE, CLEVELAND, OHIO (AND THE NOTES & DETAILS SHOWN ON SHEET(S) 67-71. THE COST OF ALL LABOR, MATERIAL, EQUIPMENT, TOOLS, EXCAVATION, BEDDING AND BACKFILL FOR THE WATER WORK SHALL BE INCLUDED IN THE CONTRACT UNIT PRICE BID FOR EACH WATER WORK ITEM. THE REPLACEMENT OF PAVEMENT, WALKS, DRIVES, LANDSCAPING AND ALL OTHER WORK EXCEPTING THE "WATERWORK" ITSELF, SHALL BE AS STIPULATED IN THE CONTRACT SPECIFICATIONS.

ALL PERMITS, FEES AND CLEVELAND WATER DEPARTMENT CHARGES SHALL BE THE RESPONSIBILITY OF THE CONTRACTOR AND THEIR ASSOCIATED COST SHALL BE INCLUDED IN THE CONTRACT UNIT PRICE BID FOR THE PERTINENT WATERWORK ITEMS. FOR BIDDING PURPOSES, The Cleveland Division of Water (CWD) CHARGES AND FEES MAY BE FOUND IN SECTION 200 OF THE CUYAHOGA COUNTY ENGINEER SPECIFICATION BOOKLET OR OBTAINED FROM THE DIVISION OF WATER, PERMIT AND SALES SECTION AT (216) 664-2444 x 5203.

SANITARY SEWER

ITEM 611 - MANHOLE, NO. 3, AS PER PLAN A

IN ADDITION TO SECTION 611.10 OF THE ODOT CMS AND STANDARD CONSTRUCTION DRAWING MH-1.2, THE CONTRACTOR SHALL PROVIDE AND INSTALL A PRECAST MANHOLE WITH A 60-INCH BASE INNER DIAMETER AND ALTERNATE ECCENTRIC CONE TOP. THE ECCENTRIC TRANSITION AND ALTERNATE ECCENTRIC CONE TOP SHALL BE INSTALLED IN A MANNER SUCH THAT THE SOUTH WALL OF THE MANHOLE IS SHIFTED AWAY FROM THE ROADWAY AS IT EXTENDS UPWARD TOWARDS THE GROUND SURFACE. THE MANHOLE STEPS SHALL BE LOCATED ON THE NORTH WALL OF THE MANHOLE. THE MANHOLE SHALL BE CONSTRUCTED AND PLACED SUCH THAT THE CENTERLINE OF THE MANHOLE IS OFFSET ONE FOOT NORTH OF THE CENTERLINE OF THE EXISTING 8-INCH SANITARY SEWER. CONTRACTOR SHALL DIVERT THE UNDERDRAIN SOUTH UNDER THE PAVEMENT TO AVOID CONFLICT WITH THE SANITARY MANHOLE.

THE MANHOLE SHALL HAVE A CUYAHOGA COUNTY NO. 9 FRAME AND A NO. 28 COVER AS DETAILED ON THE CUYAHOGA COUNTY ENGINEER'S CONSTRUCTION DRAWING MH-10C.

PAYMENT SHALL BE FULL COMPENSATION FOR ALL MATERIAL, LABOR, INCIDENTALS AND EQUIPMENT NECESSARY FOR FURNISHING AND INSTALLING THE NEW MANHOLE.

CALCULATED VLE CHECKED JTP

GENERAL NOTES

CUY - OLD ROCKSIDE ROAD

P:\PR57030\Cadd\Sheets\ORR_91563_GN007.dwg 02-Sep-21 5:55 PM

TRAFFIC CONTROL

ITEM 630 - SIGN, FLAT SHEET, AS PER PLAN

ALL SIGNS SHALL BE SUPPLIED AND ERECTED BY THE CONTRACTOR. SIGN SHEETING SHALL BE TYPE G EXCEPT FOR ALL STOP (R1-1), YIELD (R1-2), DO NOT ENTER (R5-1) AND WRONG WAY (R5-1a) SIGNS WHICH SHALL BE TYPE H SHEETING. STORE SIGNS AND POSTS AS DIRECTED BY THE ENGINEER FOR PICK UP BY COUNTY.

ITEM 630 - REMOVAL OF GROUND MOUNTED SIGN AND DELIVERY, AS PER PLAN

THE CONTRACTOR SHALL CAREFULLY REMOVE THE THORNBURG STATION ENTRY SIGNAGE AND SUPPORT STRUCTURE PER CMS 630.12. THE SIGN, INCLUDING SUPPORTS, SHALL BE DELIVERED TO THORNBURG STATION AS DIRECTED BY THE ENGINEER.

THE COST OF ALL LABOR AND EQUIPMENT NECESSARY FOR THE REMOVAL AND DELIVERY OF THE SIGN AND RESTORATION OF THE DISTURBED AREA SHALL BE INCLUDED IN THE CONTRACT UNIT PRICE BID FOR EACH ITEM 630 - REMOVAL OF GROUND MOUNTED SIGN AND DELIVERY, AS PER PLAN.

ITEM 630 - SIGNING, MISC.: SIGN ADJUSTED

THE CONTRACTOR SHALL REMOVE AND RECONSTRUCT OR MODIFY THE EXISTING SIGN SUPPORT STRUCTURE CONSTRUCTED OF FOUR-INCH-SQUARE WOOD POSTS, PAINTED BROWN, TO INCREASE THE HEIGHT OF THE ILLUMINATED SIGN BY THREE FEET. THIS ITEM SHALL INCLUDE ALL NECESSARY ELECTRICAL WORK NECESSARY TO ADJUST THE SIGN LIGHTING BY THE SAME THREE FEET.

MATERIALS USED TO RECONSTRUCT OR ADJUST THE SIGN AND LIGHTING HEIGHT SHALL MATCH THE MATERIAL TYPES USED IN THE EXISTING SIGN SUPPORT, INCLUDING, BUT NOT LIMITED TO, STAINLESS STEEL HARDWARE, FOUR-INCH-SQUARE WOOD POSTS, CONDUIT, JUNCTION BOXES AND WIRING. ALL NEW WORK SHALL BE PAINTED WITH TWO COATS OF PARK BROWN PMS 476 SEMI-GLOSS PAINT. ALL EXISTING WORK TO REMAIN SHALL BE PAINTED WITH ONE COAT OF PARK BROWN PMS 476 SEMI-GLOSS PAINT. THE TIME IN WHICH THE SIGN MAY BE REMOVED FROM SERVICE SHALL BE LIMITED TO ONE WEEK.

THE COST OF THE MATERIAL AND LABOR ASSOCIATED WITH THE ABOVE WORK IS INCLUDED IN THE CONTRACT UNIT PRICE BID FOR EACH ITEM 630 - SIGNING , MISC.: SIGN ADJUSTED.

INSTALLATION OF PERMANENT PAVEMENT MARKINGS (ITEMS 646)

THE CONTRACTOR MAY REDUCE THE NUMBER OF THROUGH TRAFFIC LANES BY 50%, AS DIRECTED BY THE ENGINEER, IN ORDER TO REMOVE PAVEMENT MARKINGS OR WORK ZONE PAVEMENT MARKINGS, AND INSTALL PERMANENT PAVEMENT MARKINGS. HE/SHE SHALL LIMIT THE AFOREMENTIONED CLOSURE TO BETWEEN THE HOURS OF 6:00 P.M. AND 10:00 P.M. UNLESS OTHERWISE APPROVED BY THE ENGINEER. THE FINAL EPOXY PAVEMENT MARKINGS (ITEM 646) SHALL BE INSTALLED PER 646.04 AND 646.05.

THE CONTRACTOR SHALL INSTALL CLASS III WORK ZONE PAVEMENT MARKINGS (FULL PATTERN, LOW RATE), PER 614.11.F.3, AS AN INTERIM PAVEMENT MARKING, AS DIRECTED BY THE ENGINEER. THE FINAL EPOXY PAVEMENT MARKINGS MUST BE INSTALLED WITHIN 30 DAYS OF INSTALLING ANY REQUIRED CLASS III WORK ZONE PAVEMENT MARKINGS. ESTIMATED QUANTITIES FOR THE CLASS III MARKINGS ARE INCLUDED IN THE ITEM 614 - WORK ZONE PAVEMENT MARKINGS NOTE ON SHEET 14 OF 157 AND ARE CARRIED TO THE GENERAL SUMMARY.

ROADWAY ABBREVIATIONS

AASHTO	= AMERICAN ASSOCIATION OF STATE HIGHWAY AND TRANSPORTATION OFFICIALS
ACBFS	= AIR-COOLED BLAST FURNACE SLAG
ANSI	= AMERICAN NATIONAL STANDARDS INSTITUTE
APP	= AS PER PLAN
APPROX.	= APPROXIMATE
ASPH.	= ASPHALT
ATG	= ADJUST TO GRADE
ATTN.	= ATTENTION
AWWA	= AMERICAN WATER WORK ASSOCIATION
BM	= BENCHMARK
BMP	= BEST MANAGEMENT PRACTICE
BUS.	= BUSINESS
C.B.	= CHORD BEARING
C/C	= CENTER-TO-CENTER
CB	= CATCH BASIN
CCS	= CRUSHED CARBONATE STONE
CL	= CENTER LINE
CMS	= CONSTRUCTION AND MATERIAL SPECIFICATIONS
CONC.	= CONCRETE
CONST.	= CONSTRUCTION
CMP	= CORRUGATED METAL PIPE
CPP	= CORRUGATED PLASTIC PIPE
CVSR	= CUYAHOGA VALLEY SCENIC RAILROAD
CY	= CUBIC YARD
Dc	= DEGREE OF CURVATURE
DEO	= DOMINION EAST OHIO
DIA.	= DIAMETER
DND	= DO NOT DISTURB
DOM.	= DOMESTIC
DR.	= DRIVE
E	= EXTERNAL DISTANCE
EDA	= EARTH DISTURBED AREA
EL.	= ELEVATION
ELEV.	= ELEVATION
EPA	= ENVIRONMENTAL PROTECTION AGENCY
EX.	= EXISTING
FT.	= FOOT
GAL.	= GALLON
HP	= HIGH POINT
HW	= HEADWALL
I P	= IRON PIN
INV.	= INVERT
JMF	= JOB MIX FORMULA
K	= K VALUE
L	= LENGTH
LEOS	= LAW ENFORCEMENT OFFICERS
LF	= LINEAR (LINAIL) FEET
LT.	= LEFT
MGAL	= THOUSAND GALLON
MGS	= MIDWEST GUARDRAIL SYSTEM
MH	= MANHOLE
MISC.	= MISCELLANEOUS
MNTH	= MONTH
MON.	= MONUMENT
MOT	= MAINTENANCE OF TRAFFIC
MSE	= MECHANICALLY STABILIZED EARTH
MSF	= MILLION SQUARE FOOT
NO.	= NUMBER
OBS.	= OBSERVED
ODOT	= OHIO DEPARTMENT OF TRANSPORTATION
OMUTCD	= OHIO MANUAL OF UNIFORM TRAFFIC CONTROL DEVICES
ORC	= OHIO REVISED CODE
OSHA	= OCCUPATIONAL SAFETY AND HEALTH ADMINISTRATION
P P	= PERMANENT PARCEL
P.I.	= POINT OF TANGENT INTERSECTION
P.V.C.	= POINT OF VERTICAL CURVATURE
P.V.I.	= POINT OF VERTICAL INSTERSECTION
P.V.T.	= POINT OF VERTICAL TANGENCY
PB	= PORTABLE BARRIER
PROP.	= PROPOSED
PSI	= POUNDS PER SQUARE INCH
PT	= POINT OF TANGENCY
PVMT.	= PAVEMENT
QL-D	= QUALITY LEVEL-D
R	= RADIUS
R/W	= RIGHT-OF-WAY
RCP	= REINFORCED CONCRETE PIPE
RD.	= ROAD
REC.	= RECORDED
RPCC	= RECYCLED PORTLAND CEMENT CONCRETE
RT.	= RIGHT

ROADWAY ABBREVIATIONS

SAN.	= SANITARY
SEC.	= SECTION
SF	= SQUARE FEET
SPP	= SMOOTH PLASTIC PIPE
SS	= SUPPLEMENTAL SPECIFICATIONS
SSD	= STOPPING SIGHT DISTANCE
STA.	= STATION
STM.	= STORM
SY	= SQUARE YARD
T	= TANGENT LENGTH
T/C	= TOP OF CURB
TBR	= TO BE REMOVED
TEL.	= TELEPHONE
TEMP.	= TEMPORARY
TYP.	= TYPICAL
UNK.	= UNKNOWN
USGS	= UNITED STATES GEOLOGICAL SURVEY
UTIL.	= UTILITY
VC	= VERTICAL CURVE
VCP	= VITRIFIED CLAY PIPE
VOL.	= VOLUME
W/	= WITH
WIND.	= WINDSTREAM
WL	= WATER LINE

BRIDGE AND RETAINING WALL ABBREVIATIONS

ABUT.	= ABUTMENT
A.S.	= APPROACH SLAB
BOT.	= BOTTOM
BRG.	= BEARING
BTA	= BRIDGE TERMINAL ASSEMBLY
BTW.	= BETWEEN
C/C	= CENTER TO CENTER
CIP	= CAST IN PLACE
CLR.	= CLEARANCE
C.J.	= CONSTRUCTION JOINT
CP	= COMPLETE PENETRATION BUTT WELD
CTD.	= CENTERED
CVN	= CHARPY V-NOTCH TESTING
CVSR	= CUYAHOGA VALLEY SCENIC RAILROAD
DIA.	= DIAMETER
E.F.	= EACH FACE
EL.	= ELEVATION
ELEV.	= ELEVATION
EOD	= EDGE OF DECK
EQ.	= EQUAL
EX.	= EXISTING
F.A.	= FORWARD ABUTMENT
F.F.	= FAR FACE
F/F	= FACE TO FACE
F.S.	= FIELD SPLICE
JT.	= JOINT
MAX.	= MAXIMUM
MIN.	= MINIMUM
N.F.	= NEAR FACE
N.P.C.P.P.	= NON-PERFORATED CORRUGATED PLASTIC PIIPE
O/O	= OUT TO OUT
OPP	= OPPOSITE
PB	= PORTABLE BARRIER
P.C.P.P.	= PERFORATED CORRUGATED PLASTIC PIPE
PEJF	= PREFORMED EXPANSION JOINT FILLER
PRJ	= PRESSURE RELIEF JOINT
R.A.	= REAR ABUTMENT
RAD.	= RADIUS
RCP	= ROCK CHANNEL PROTECTION
REQ.	= REQUIRED
R/W	= RIGHT OF WAY
SDC	= SUPERPLASTICIZED DENSE CONCRETE
SP.	= SPACES
SPA.	= SPACING
T/S	= TOE OF SLOPE
TYP.	= TYPICAL
U.N.O.	= UNLESS NOTED OTHERWISE

CALCULATED VLE
CHECKED JTP

GENERAL NOTES

CUY - OLD ROCKSIDE ROAD

13A
157

P:\PR57030\Cadd\Sheets\ORR_91563_GN008.dwg 02-Sep-21 5:55 PM

CALCULATED VLE CHECKED JTP

MAINTENANCE OF TRAFFIC NOTES

SEQUENCE OF CONSTRUCTION

THE CONSTRUCTION PHASING DETAILED BELOW DESCRIBES THE WORK ITEMS NEEDED TO REPLACE THE OLD ROCKSIDE ROAD BRIDGE OVER THE CUYAHOGA RIVER, INCLUDING THE RECONSTRUCTION OF THE APPROACH ROADWAY PAVEMENT. ANY PROPOSED CHANGES TO THE MAINTENANCE OF TRAFFIC PHASING LISTED BELOW MUST BE SUBMITTED IN WRITING AND APPROVED BY THE ENGINEER. SEE SHEETS 14/157 TO 36/157 FOR MAINTENANCE OF TRAFFIC PLANS AND DETAILS.

THE CONTRACTOR SHALL MAINTAIN SAFE PUBLIC ACCESS TO THE CUYAHOGA VALLEY NATIONAL PARK AND ITS ASSOCIATED RECREATIONAL FACILITIES AT ALL TIMES DURING CONSTRUCTION ACTIVITIES, EXCEPT FOR THE BRIEF PERIODS OF TIME NEEDED DURING DRIVEWAY RECONSTRUCTION. THESE SHOULD BE LIMITED TO 2-3 CLOSURES OF 2-3 DAYS EACH.

PRE-PHASE 1A:

MAINTAIN NORMAL TRAFFIC OPERATIONS ON THE EXISTING ROADWAY AND BRIDGE, USING FLAGGERS AS NECESSARY. RELOCATE THE WATERLINE ON THE EAST SIDE OF THE BRIDGE; CONSTRUCT THE STORM SEWER MAIN ON THE NORTH SIDE OF OLD ROCKSIDE ROAD WEST OF THE BRIDGE INCLUDING THE DRAINAGE STRUCTURE AT STATION 28+50 LEFT; CONSTRUCT THE RETAINING WALL ALONG THE SOUTH SIDE OF OLD ROCKSIDE ROAD EAST OF THE BRIDGE (SEE RETAINING WALL SEQUENCE OF CONSTRUCTION NOTE ON SHEET 74/157) AND COMPLETE THE CURB AND PARKING LOT PAVEMENT RESTORATION, UP TO AND INCLUDING THE ASPHALT INTERMEDIATE COURSE, ADJACENT TO THE RETAINING WALL AND WATERLINE WORK. THE CONTRACTOR MAY ELECT TO COMPLETE THE CURB REPLACEMENT DURING PHASE 3, BUT THE PAVEMENT RESTORATION MUST BE COMPLETED DURING THIS PHASE. ANY DAMAGE TO THE CURB OR PAVEMENT RESULTING FROM WORK IN FUTURE CONSTRUCTION PHASES SHALL BE REPAIRED BY THE CONTRACTOR, TO THE SATISFACTION OF THE ENGINEER, AT NO ADDITIONAL COST TO THE PROJECT. WATER SERVICE SHALL BE MAINTAINED TO ABUTTING PROPERTIES AT ALL TIMES DURING RELOCATION WORK. IF UNFORSEEN CONDITIONS ARISE THAT REQUIRE AN OUTAGE, SAID OUTAGE SHALL NOT OCCUR BETWEEN THE HOURS OF 7 AM AND MIDNIGHT UNLESS OTHERWISE PERMITTED BY THE ENGINEER. THE PARKING LOT AT THE NORTHEAST CORNER OF THE BRIDGE SHALL REMAIN OPEN FOR USE BY THE GENERAL PUBLIC UNTIL RESTORATION WORK IN PRE-PHASE 1A IS COMPLETED AND ACCEPTED. UPON COMPLETING OF WORK IN THIS PHASE, THE PARKING STALLS IN THE THORNBURG STATION PARKING LOT IMPACTED BY WATERLINE AND RETAINING WALL CONSTRUCTION SHALL BE PLACED BACK IN SERVICE FOR USE BY THE GENERAL PUBLIC.

PHASE 1A:

MAINTAIN NORMAL TRAFFIC OPERATIONS ON THE EXISTING ROADWAY AND BRIDGE. CONSTRUCT THE TEMPORARY MAINLINE ROADWAY PAVEMENT AND BRIDGE FROM STATION 129+50 TO THE INTERSECTION OF WEST CANAL ROAD. USE FLAGGERS AS NECESSARY TO MAINTAIN TRAFFIC WHILE REMOVING THE EXISTING CURB AND CONSTRUCTING TEMPORARY PAVEMENT AT THE OLD ROCKSIDE ROAD AND WEST CANAL ROAD INTERSECTION. JUST PRIOR TO THE COMPLETION OF PHASE 1A WORK, THE CONTRACTOR SHALL BEGIN PREPARING THE CUYAHOGA VALLEY NATIONAL PARK DRIVE TO THE CUYAHOGA VALLEY SCENIC RAILROAD (CVSR) ROCKSIDE ROAD STATION PARKING LOT FOR WORK TO BE COMPLETED IN PHASE 1B. WORK MAY INCLUDE ITEMS SUCH AS PAVEMENT REMOVAL, AS LONG AS ACCESS IS MAINTAINED USING COMPACTED AGGREGATE BASE OR OTHER APPROVED MATERIAL. FULL ACCESS TO CVSR PARKING LOT MUST BE MAINTAINED AT ALL TIMES IN WHICH THE CVSR IS OPERATING. THE CVSR CURRENTLY DOES NOT OPERATE TRAINS FROM THIS STATION MONDAY THROUGH THURSDAY IN THE MONTH OF MAY AND MONDAYS AND TUESDAYS IN THE MONTHS OF JUNE, JULY AND AUGUST. THE CONTRACTOR SHALL MONITOR THE CVSR WEB-SITE FOR UPDATES.

PHASE 1B:

UTILIZING A WEEKEND CLOSURE OF THE DRIVEWAY TO FRANCK & FRIC, INC. LOCATED AT 7919 OLD ROCKSIDE ROAD, CONSTRUCT THE REMAINING TEMPORARY MAINLINE PAVEMENT ALONG OLD ROCKSIDE ROAD. UPON COMPLETION OF THE TEMPORARY MAINLINE PAVEMENT, AND ON THE SAME WEEKEND AS THE PAVEMENT WAS PLACED, SHIFT TWO-WAY TRAFFIC TO THE TEMPORARY PAVEMENT AND BRIDGE. THIS SHIFT SHALL TAKE PLACE ON A SUNDAY EVENING, APPROXIMATELY ONE HOUR AFTER THE LAST CVSR TRAIN ARRIVES AT THE ROCKSIDE ROAD STATION AND ALL VEHICLES HAVE VACATED THE ROCKSIDE ROAD STATION PARKING LOT. IN THE DAYS FOLLOWING THE SHIFT IN WHICH THE CVSR ROCKSIDE ROAD STATION IS NOT IN OPERATION, THE CONTRACTOR SHALL CONSTRUCT THE PERMANENT AND TEMPORARY CVNP DRIVE PAVEMENT AS SHOWN ON THE MAINTENANCE OF TRAFFIC SCHEMATIC PLAN. PERMANENT PAVEMENT, IN ALL PHASES, SHALL NOT INCLUDE THE ASPHALT CONCRETE SURFACE COURSE, UNLESS EXPLICITLY EXPRESSED.

PHASE 2A:

MAINTAIN TWO-WAY TRAFFIC ON TEMPORARY PAVEMENT AND THE TEMPORARY BRIDGE CONSTRUCTED IN PREVIOUS PHASES; INSTALL THE DRAINAGE STRUCTURES AT STATION 29+25; REMOVE AND REPLACE THE OLD ROCKSIDE ROAD BRIDGE AND PAVEMENT, EXCLUDING THE SECTION FROM STATION 29+50 TO THE REAR APPROACH SLAB AS SHOWN ON THE PLANS AND DETAILS. TO FACILITATE CONSTRUCTION DURING THIS PHASE, THE CONTRACTOR MAY PERIODICALLY CLOSE THE FIVE WESTERN-MOST PARKING STALLS IN THE NORTHWEST CORNER OF THE THORNBURG STATION PARKING LOT. THE CLOSURE OF THESE PARKING STALLS SHALL ONLY BE DONE WITH THE APPROVAL OF THE ENGINEER TO COMPLETE SPECIFIC CONSTRUCTION TASKS THAT COULD NOT BE COMPLETED OTHERWISE.

PHASE 2B:

WHILE CONTINUING TO MAINTAIN TWO-WAY TRAFFIC ON TEMPORARY PAVEMENT AND THE TEMPORARY BRIDGE CONSTRUCTED IN PREVIOUS PHASES, REMOVE THE TEMPORARY PAVEMENT CONNECTING THE CVNP DRIVE TO THE TEMPORARY MAINLINE PAVEMENT; INSTALL THE REMAINING DRAINAGE STRUCTURES; AND CONSTRUCT THE FINAL PAVEMENT FROM STATION 29+50 TO THE REAR APPROACH SLAB. THIS WORK MUST TAKE PLACE ON DAYS IN WHICH THE CVSR ROCKSIDE ROAD STATION IS NOT IN OPERATION. UPON COMPLETION OF PAVEMENT WORK IN THIS PHASE, TRAFFIC SHALL BE SHIFTED FROM THE TEMPORARY PAVEMENT AND BRIDGE TO THE PERMANENT PAVEMENT AND BRIDGE. CONTRACTOR SHALL MAINTAIN ACCESS TO FRANCK & FRIC, INC. LOCATED AT 7919 OLD ROCKSIDE ROAD USING TEMPORARY PAVEMENT AND AGGREGATE BASE AS NECESSARY.

PHASE 3:

USING DRUMS AND FLAGGERS, CONSTRUCT THE CURB AT THE NORTHWEST CORNER OF OLD ROCKSIDE ROAD AND WEST CANAL ROAD; REMOVE THE TEMPORARY PAVEMENT, BRIDGE AND EMBANKMENT; RECONSTRUCT THE PARKING LOTS AND DRIVE APRONS AS SHOWN ON THE MAINTENANCE OF TRAFFIC SCHEMATICS; INSTALL ASPHALT CONCRETE SURFACE COURSE AND PAVEMENT MARKINGS; AND ALL ELSE NECESSARY TO COMPLETE THE PROJECT. THE CONTRACTOR SHALL COORDINATE WITH, AND SCHEDULE RESTORATION WORK AROUND FIRST ENERGY'S RELOCATION WORK TO REMOVE THE TEMPORARY UTILITY POLES AND LINES WHICH WERE INSTALLED PRIOR TO THE START OF CONSTRUCTION.

CONSTRUCTION TRAFFIC

ALL CONSTRUCTION TRAFFIC SHALL USE ACCEPTABLE TRUCK ROUTES TO ACCESS THE CONSTRUCTION AREA. USE OF LOCAL RESIDENTIAL STREETS IS STRICTLY PROHIBITED UNLESS ALLOWED IN WRITING BY THE LOCAL ENFORCEMENT AUTHORITY.

ITEM 614 - MAINTAINING TRAFFIC, AS PER PLAN

THE CONTRACTOR SHALL MAINTAIN SAFE AND SATISFACTORY ACCESS TO ABUTTING PROPERTY.

THE CONTRACTOR SHALL DIVERT TRAFFIC FROM NORMAL CHANNELS BY PLASTIC DRUMS, TRAFFIC SIGNS AND WORK ZONE PAVEMENT MARKINGS, AS SHOWN ON SHEETS 34-36.

ALL CONSTRUCTION TRAFFIC CONTROL DEVICES USED FOR THIS PROJECT SHALL CONFORM TO THE OMUTCD FOR STREETS AND HIGHWAYS, AND SHALL BE FURNISHED, ERECTED, MAINTAINED, AND REMOVED BY THE CONTRACTOR, EXCEPT AS NOTED BELOW.

THE CONTRACTOR SHALL FURNISH AND MAINTAIN ALL NECESSARY SAFEGUARDS, SUCH AS FLASHING ARROW PANELS, TYPE III BARRICADES, LIGHTING, FLAGGERS, SIGNING, REPLACEMENT SIGNING AND BARRICADES DAMAGED DURING CONSTRUCTION AND SUCH OTHER TRAFFIC CONTROL DEVICES AS PROVIDED IN ITEM 614, MAINTAINING TRAFFIC, SO AS TO AVOID DAMAGE AND/OR INJURY TO VEHICLES AND PERSONS USING THE ROADWAY DURING CONSTRUCTION.

EXISTING TRAFFIC CONTROL DEVICES (SIGNS AND/OR TRAFFIC SIGNALS), LOCATED WITHIN THE WORK AREA, WHICH ARE REQUIRED FOR INTERIM OR PERMANENT TRAFFIC CONTROL, SHALL BE RELOCATED TO POINTS APPROVED BY THE ENGINEER. APPROPRIATE TRAFFIC CONTROL DEVICES SHALL BE MAINTAINED, IN COMPLIANCE WITH THE OMUTCD, AT ALL TIMES WHILE TRAFFIC IS MAINTAINED. THE COST OF RELOCATION, IF REQUIRED, SHALL BE INCLUDED IN THE LUMP SUM PRICE BID FOR ITEM 614 - MAINTAINING TRAFFIC, AS PER PLAN.

THE LENGTH AND DURATION OF LANE CLOSURES AND/OR TRAFFIC RESTRICTIONS SHALL BE AT THE APPROVAL OF THE ENGINEER. THE INTENT IS TO MINIMIZE THE IMPACT TO THE TRAVELING PUBLIC. LANE CLOSURES OR RESTRICTIONS OVER SEGMENTS OF THE PROJECT IN WHICH NO WORK IS ANTICIPATED WITHIN A REASONABLE TIME FRAME, AS DETERMINED BY THE ENGINEER, SHALL NOT BE PERMITTED. THE LEVEL OF UTILIZATION OF MAINTENANCE OF TRAFFIC DEVICES SHALL BE COMMENSURATE WITH THE WORK IN PROGRESS.

COSTS FOR MAINTENANCE OF RIVER TRAFFIC, WORK INVOLVEMENT NEAR THE CUYAHOGA VALLEY NATIONAL PARK AND CUYAHOGA VALLEY SCENIC RAILROAD AND MAINTENANCE AND EMERGENCY CLOSING OF THE TEMPORARY STRUCTURE SHALL BE INCLUDED IN ITEM 614 - MAINTAINING TRAFFIC, AS PER PLAN. SEE THE ITEM 502 - STRUCTURE FOR MAINTAINING TRAFFIC NOTE IN THE STRUCTURE NOTES ON SHEET 84/157 FOR DETAILS.

ALL WORK AND TRAFFIC CONTROL DEVICES SHALL BE IN ACCORDANCE WITH 614 AND OTHER APPLICABLE PORTIONS OF THE SPECIFICATIONS, AS WELL AS THE OMUTCD. PAYMENT FOR ALL LABOR, EQUIPMENT, AND MATERIALS SHALL BE INCLUDED IN THE LUMP SUM CONTRACT PRICE FOR 614 - MAINTAINING TRAFFIC, AS PER PLAN, UNLESS SEPARATELY ITEMIZED IN THE PLAN.

ITEM 614 - WORK ZONE PAVEMENT MARKINGS

THE FOLLOWING QUANTITIES HAVE BEEN CARRIED TO THE GENERAL SUMMARY FOR USE IN MARKING THE TEMPORARY ROADWAY AS SHOWN ON SHEET 34-36, THE INTERMEDIATE PAVEMENT CONSTRUCTED IN PHASE 2B AND THE PLANED SURFACE CREATED IN PHASE 3.

ITEM 614 WORK ZONE CENTER LINE, CLASS I, 642 PAINT	0.60 M
ITEM 614 WORK ZONE EDGE LINE, CLASS I, 4", 642 PAINT	0.40 M
ITEM 614 WORK ZONE STOP LINE, CLASS I, 642 PAINT	100 FT
ITEM 614 WORK ZONE DOTTED LINE, CLASS 1, 4", 642 PAINT	80 FT
ITEM 614 WORK ZONE RAILROAD SYMBOL MARKING, CLASS 1, 642 PAINT	1 EA

THE FOLLOWING QUANTITIES HAVE BEEN CARRIED TO THE GENERAL SUMMARY FOR USE IN MARKING THE FINAL ROADWAY SURFACE, PRIOR TO THE INSTALLATION OF THE FINAL PAVEMENT MARKINGS.

ITEM 614 WORK ZONE CENTER LINE, CLASS III, 642 PAINT	0.22 M
ITEM 614 WORK ZONE EDGE LINE, CLASS III, 4", 642 PAINT	0.24 M
ITEM 614 WORK ZONE STOP LINE, CLASS III, 642 PAINT	65 FT

FINAL EPOXY PAVEMENT MARKINGS MUST BE INSTALLED WITHIN 30 DAYS OF INSTALLING ANY REQUIRED CLASS III WORK ZONE PAVEMENT MARKINGS.

CUY - OLD ROCKSIDE ROAD

P:\PR57030\Cadd\Sheets\ORR_91563_MN001.dwg 02-Sep-21 5:56 PM

CONSTRUCTION WARNING SIGNS

IMMEDIATELY PRIOR TO THE START OF CONSTRUCTION, THE CONTRACTOR SHALL INSTALL THE CONSTRUCTION WARNING SIGNS AS DESCRIBED BELOW.

AS A MINIMUM, G20-1 SIGNS FACING TRAFFIC ENTERING THE PROJECT, AND G20-2 SIGNS FACING TRAFFIC LEAVING THE PROJECT, SHALL BE PLACED AS SHOWN IN THE MANUAL. ADDITIONAL G20-1 SIGNS SHALL BE PLACED AFTER EACH MAJOR INTERSECTION, IN BOTH DIRECTIONS, AND AFTER EACH SUSPENSION AND RESUMPTION OF WORK.

ADDITIONALLY, A W20-1 SIGN SHALL BE PLACED ON EACH INTERSECTING STREET A MINIMUM OF 200 FEET IN ADVANCE OF THE PROJECT, AND ON THE APPROACHES TO THE PROJECT A MINIMUM OF 500 FEET IN ADVANCE OF THE WORK LIMITS. G20-2 SIGNS SHALL ALSO BE INSTALLED ON EACH MAJOR INTERSECTING STREET, FACING TRAFFIC LEAVING THE PROJECT, A MINIMUM OF 200 FEET FROM THE PROJECT.

THE TRAFFIC CONTROL DEVICES SHOWN ON MT-97.10 AND MT-97.11 SHALL BE IN ADDITION TO THOSE INDICATED ABOVE. IF DIRECTED BY THE ENGINEER, THE CONTRACTOR SHALL ALSO INSTALL W8-11 "UNEVEN LANES", W8-7 "LOOSE GRAVEL," AND/OR W21-2 "FRESH OIL/TAR" SIGNS.

FLUORESCENT ORANGE TYPE G SIGN SHEETING SHALL BE USED FOR ALL DETOUR AND CONSTRUCTION WARNING SIGNS. NO SEPARATE PAYMENT FOR THESE SIGNS WILL BE MADE. THE COST OF FURNISHING, INSTALLING, MAINTAINING, AND REMOVING THESE SIGNS SHALL BE INCLUDED IN THE LUMP SUM BID FOR ITEM 614-MAINTAINING TRAFFIC.

ITEM 614 - BARRIER REFLECTORS AND OBJECT MARKERS

BARRIER REFLECTORS TYPE 1, BIDIRECTIONAL, AND OBJECT MARKERS SHALL BE INSTALLED ON ALL PORTABLE CONCRETE BARRIER USED FOR TRAFFIC CONTROL, AND BARRIER REFLECTORS TYPE 3, BIDIRECTIONAL, SHALL BE INSTALLED ON ALL GUARDRAIL USED FOR TRAFFIC CONTROL. BARRIER REFLECTORS AND OBJECT MARKERS AND THEIR INSTALLATION SHALL CONFORM TO ITEM 626 AND THE DETAILS AND NOTES ON STANDARD CONSTRUCTION DRAWING MT-101.70, EXCEPT THAT THE SPACING SHALL BE 25 FEET.

AN ESTIMATED QUANTITY OF THE FOLLOWING HAS BEEN PROVIDED AND CARRIED TO THE GENERAL SUMMARY.

ITEM 614 - OBJECT MARKER, TWO WAY
30 EACH

ITEM 614 - BARRIER REFLECTOR, TYPE 1, BIDIRECTIONAL
30 EACH

ITEM 614 - BARRIER REFLECTOR, TYPE 3, BIDIRECTIONAL
6 EACH

PAYMENT SHALL BE FULL COMPENSATION FOR ALL MATERIAL, LABOR, INCIDENTALS AND EQUIPMENT NECESSARY FOR FURNISHING, INSTALLING, MAINTAINING AND REMOVING THE ABOVE ITEMS.

TEMPORARY RAMPING OF VERTICAL SURFACES AND TRENCH MAINTENANCE (AS DIRECTED)

IN ORDER TO PROVIDE FOR LOCAL ACCESS, LONGITUDINAL VERTICAL FACES ABUTTING DRIVES SHALL BE TEMPORARILY RAMPED. TRANSVERSE VERTICAL FACES SHALL BE TEMPORARILY RAMPED A MINIMUM OF TEN (10) FEET IN LENGTH AND TRAFFIC SHALL BE WARNED WITH W8-1 "BUMP" SIGNS IN ADVANCE OF THE RAMPED AREAS.

CONTRACTOR SHALL MAINTAIN UTILITY TRENCHES USING THE QUANTITIES LISTED BELOW AS DIRECTED BY THE ENGINEER.

ALL CASTINGS ENCOUNTERED SHALL BE SET TO GRADE AND PAID FOR UNDER VARIOUS ITEMS DESCRIBED ELSEWHERE IN THE GENERAL NOTES OR SPECIFICATIONS. THE CASTING ELEVATION DIFFERENTIAL SHALL NOT BE GREATER THAN ONE (1) INCH WHEN EXPOSED TO TRAFFIC.

ALL TEMPORARY RAMPING SHALL BE INSTALLED, AT THE DIRECTION OF THE ENGINEER, USING ITEM 614 - ASPHALT CONCRETE FOR MAINTAINING TRAFFIC.

THE FOLLOWING ESTIMATED QUANTITIES HAVE BEEN CARRIED TO THE GENERAL SUMMARY.

ITEM 614 - ASPHALT CONCRETE FOR MAINTAINING TRAFFIC
20 CY

ITEM 410 - TRAFFIC COMPACTED SURFACE, TYPE A OR B
15 CY

ITEM 452 - 8" NON-REINFORCED CONCRETE PAVEMENT, CLASS QC 1P
20 SY

ITEM 614 - LAW ENFORCEMENT OFFICER WITH PATROL CAR FOR ASSISTANCE

USE OF LAW ENFORCEMENT OFFICERS (LEOS) BY CONTRACTORS OTHER THAN THE USES SPECIFIED BELOW WILL NOT BE PERMITTED AT PROJECT COST. LEOS SHOULD NOT BE USED WHERE THE OMUTCD INTENDS THAT FLAGGERS BE USED.

IN ADDITION TO THE REQUIREMENTS OF CMS 614 AND THE OMUTCD, A UNIFORMED LEO WITH AN OFFICIAL PATROL CAR (CAR WITH TOP-MOUNTED EMERGENCY FLASHING LIGHTS AND COMPLETE MARKINGS OF THE APPROPRIATE LAW ENFORCEMENT AGENCY) SHALL BE PROVIDED FOR THE FOLLOWING TRAFFIC CONTROL TASKS:

DURING THE ENTIRE ADVANCE PREPARATION AND CLOSURE SEQUENCE WHERE COMPLETE BLOCKAGE OF TRAFFIC IS REQUIRED.

IN ADDITION TO THE REQUIREMENTS OF CMS 614 AND THE OMUTCD, A UNIFORMED LEO WITH AN OFFICIAL PATROL CAR (CAR WITH TOP-MOUNTED EMERGENCY FLASHING LIGHTS AND COMPLETE MARKINGS OF THE APPROPRIATE LAW ENFORCEMENT AGENCY) SHOULD BE PROVIDED FOR THE FOLLOWING TRAFFIC CONTROL TASKS AS APPROVED BY THE ENGINEER:

FOR LANE CLOSURES: DURING INITIAL SET-UP PERIODS, TEAR DOWN PERIODS, SUBSTANTIAL SHIFTS OF A CLOSURE POINT OR WHEN NEW LANE CLOSURE ARRANGEMENTS ARE INITIATED FOR LONG-TERM LANE CLOSURES/SHIFTS (FOR THE FIRST AND LAST DAY OF MAJOR CHANGES IN TRAFFIC CONTROL SETUP). IN GENERAL, LEOS SHOULD BE POSITIONED AT THE POINT OF LANE RESTRICTION OR ROAD CLOSURE AND TO MANUALLY CONTROL TRAFFIC MOVEMENTS THROUGH INTERSECTIONS IN WORK ZONES.

LEOS SHOULD NOT FORGO THEIR TRAFFIC CONTROL RESPONSIBILITIES TO APPREHEND MOTORISTS FOR ROUTINE TRAFFIC VIOLATIONS. HOWEVER, IF A MOTORIST'S ACTIONS ARE CONSIDERED TO BE RECKLESS, THEN PURSUIT OF THE MOTORIST IS APPROPRIATE.

THE LEOS WORK AT THE DIRECTION OF THE CONTRACTOR. THE CONTRACTOR IS RESPONSIBLE FOR SECURING THE SERVICES OF THE LEOS WITH THE APPROPRIATE AGENCIES AND COMMUNICATING THE INTENTIONS OF THE PLANS WITH RESPECT TO DUTIES OF THE LEOS. THE ENGINEER SHALL HAVE FINAL CONTROL OVER THE LEOS' DUTIES AND PLACEMENT, AND WILL RESOLVE ANY ISSUES THAT MAY ARISE BETWEEN THE TWO PARTIES.

THE LEO SHALL REPORT IN TO THE CONTRACTOR PRIOR TO THE START OF THE SHIFT, IN ORDER TO RECEIVE INSTRUCTIONS REGARDING SPECIFIC WORK ASSIGNMENTS DURING HIS/HER SHIFT. THE LEO IS EXPECTED TO STAY AT THE PROJECT SITE FOR THE ENTIRE DURATION OF HIS/HER SHIFT. THE LEO SHALL REPORT TO THE CONTRACTOR AT THE END OF HIS/HER SHIFT. ONCE THE LEO HAS COMPLETED THE DUTIES DESCRIBED ABOVE AND STILL HAS TIME REMAINING ON HIS/HER SHIFT, THE LEO MAY BE ASKED TO PATROL THROUGH THE WORK ZONE (WITH FLASHING LIGHTS OFF) OR BE PLACED AT A LOCATION TO DETER MOTORISTS FROM SPEEDING. SHOULD IT BE NECESSARY TO LEAVE THE PROJECT SITE, THE LEO SHALL NOTIFY THE ENGINEER. THE CONTRACTOR SHALL PROVIDE THE LEO WITH A TWO-WAY COMMUNICATION DEVICE WHICH SHALL BE RETURNED TO THE CONTRACTOR AT THE END OF HIS/HER SHIFT.

LEOS (WITH PATROL CAR) REQUIRED BY THE TRAFFIC MAINTENANCE TASKS ABOVE SHALL BE PAID FOR ON A UNIT PRICE (HOURLY) BASIS UNDER ITEM 614 - LAW ENFORCEMENT OFFICER WITH PATROL CAR FOR ASSISTANCE. THE FOLLOWING ESTIMATED QUANTITIES HAVE BEEN CARRIED TO THE GENERAL SUMMARY.

ITEM 614 - LAW ENFORCEMENT OFFICER WITH PATROL CAR FOR ASSISTANCE
40 HOUR

THE HOURS PAID SHALL INCLUDE ANY MINIMUM SHOW-UP TIME REQUIRED BY THE LAW ENFORCEMENT AGENCY INVOLVED.

ANY ADDITIONAL COSTS (ADMINISTRATIVE OR OTHERWISE) INCURRED BY THE CONTRACTOR TO OBTAIN THE SERVICES OF AN LEO ARE INCLUDED WITH THE BID UNIT PRICE FOR ITEM 614 - LAW ENFORCEMENT OFFICER WITH PATROL CAR FOR ASSISTANCE.

NOTIFICATION

THE CONTRACTOR SHALL NOTIFY IN WRITING THE FOLLOWING AGENCIES AT LEAST TWO (2) WEEKS PRIOR TO THE START OF CONSTRUCTION, AND AT LEAST 72 HOURS BEFORE IMPLEMENTING ANY SUBSTANTIAL CHANGE IN TRAFFIC PATTERN OR CLOSING ANY STREET TO TRAFFIC:

VALLEY VIEW POLICE DEPARTMENT
DAVID NIRO, CHIEF OF POLICE
dniro@valleyview.net
PHONE: 216-524-9687

VALLEY VIEW FIRE DEPARTMENT
KENNETH PAPESH, FIRE CHIEF
kpapesh@valleyview.net
PHONE: 216-524-5886

VALLEY VIEW SERVICE DEPARTMENT
LADD SOLDAT
servicedepartment@valleyview.net
PHONE: 216-524-1087

CUYAHOGA HEIGHTS BOARD OF EDUCATION
MARK DOBBINS, PRESIDENT
markdobbins@cuyhts.org
PHONE: 216-926-5889

CUYAHOGA COUNTY DEPARTMENT OF PUBLIC WORKS PUBLIC INFORMATION CENTER
PHONE: 216-348-3824

THE OHIO DEPARTMENT OF TRANSPORTATION DISTRICT 12 PUBLIC INFORMATION OFFICE
AMANDA MCFARLAND
PHONE: 216-584-2005

INDEPENDENCE POLICE DEPARTMENT
MICHAEL KILBANE, CHIEF OF POLICE
kilbanemindependenceohio.org
PHONE: 216-524-1234

INDEPENDENCE FIRE DEPARTMENT
STEVE REGA, FIRE CHIEF
PHONE: 216-524-5886

INDEPENDENCE SERVICE DEPARTMENT
LEON KARAS, SERVICE DIRECTOR
PHONE: 216-524-9191

INDEPENDENCE BOARD OF EDUCATION
LYNNE LASKI, PRESIDENT
llaski@independence.k12.oh.us
PHONE: 216-926-5889

CUYAHOGA COUNTY BOARD OF DEVELOPMENTAL DISABILITIES
PHONE: 216-241-8230

UNITED STATES POSTAL SERVICE
6509 BRECKSVILLE ROAD
INDEPENDENCE, OH 44131
PHONE: 800-275-8777

CALCULATED SAF
CHECKED JTP

MAINTENANCE OF TRAFFIC NOTES

CUY - OLD ROCKSIDE ROAD

15
157

P:\PR57030\Cadd\Sheets\ORR_91563_MN002.dwg 02-Sep-21 5:56 PM

[A] SEE CROSS SECTIONS FOR GRADING, SEE SHEETS 25 THROUGH 29.

NOTE: TEMPORARY ROAD PAVEMENT COMPOSITION BASED ON ODOT ITEM 615 ROADS AND PAVEMENTS FOR MAINTAINING TRAFFIC CLASS A.

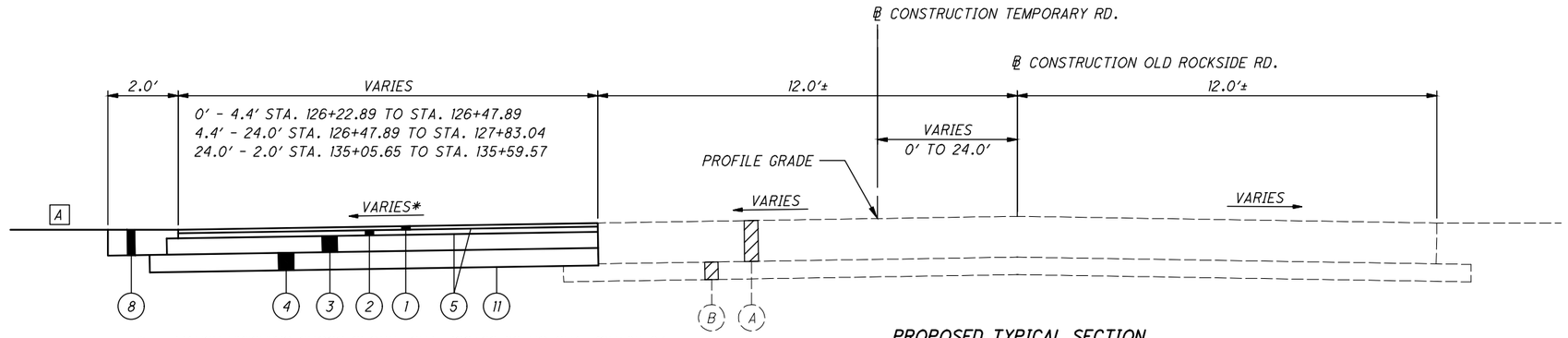

* MATCH EXISTING CROSS SLOPE STA. 126+22.89 TO STA. 127+83.04
-0.0314 TO -0.0588 STA. 135+05.65 TO STA. 135+59.57

PROPOSED TYPICAL SECTION
STA. 126+22.89 TO STA. 127+83.04
STA. 135+05.65 TO STA. 135+59.57

LEGEND

1. ITEM 441 - 1.25″ ASPHALT CONCRETE SURFACE COURSE, TYPE 1, (448), PG64-22, AS PER PLAN
2. ITEM 441 - 1.75″ ASPHALT CONCRETE INTERMEDIATE COURSE, TYPE 2 (448), PG64-22, AS PER PLAN
3. ITEM 302 - 5.5″ ASPHALT CONCRETE BASE, PG64-22, AS PER PLAN
4. ITEM 304 - 6″ AGGREGATE BASE, AS PER PLAN
5. ITEM 407 - NON-TRACKING TACK COAT
6. ITEM 659 - SEEDING AND MULCHING
7. ITEM 622 - PORTABLE BARRIER (LOCATION PER MAINTENANCE OF TRAFFIC PLAN SHEETS)
8. ITEM 304 - 8.5″ AGGREGATE BASE, AS PER PLAN
9. ITEM 606 - GUARDRAIL, TYPE MGS (LOCATION PER MAINTENANCE OF TRAFFIC PLAN SHEETS)
10. ITEM 526 - REINFORCED CONCRETE APPROACH SLAB (T=15″), AS PER PLAN
11. ITEM 204 - SUBGRADE COMPACTION

(A) ASPHALT CONCRETE PAVEMENT, THICKNESS VARIES 8″ - 16″

(B) AGGREGATE BASE, THICKNESS VARIES 4″ - 12″

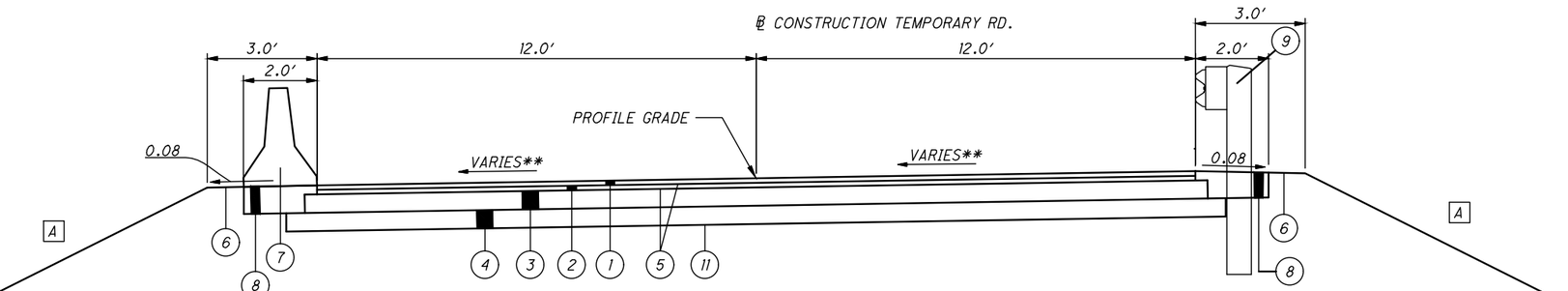

PROPOSED TYPICAL SECTION
STA. 127+83.04 TO STA. 130+60.71
STA. 133+14.86 TO STA. 135+05.65

** 0.016 STA. 127+83.04 TO STA. 130+55.00
0.016 TO 0.0125 STA. 130+55.00 TO STA. 130+60.71
0.00 TO STA. 0.016 STA. 133+14.86 TO STA. 133+40.77
0.016 STA. 133+40.77 TO STA. 134+28.82
0.016 TO -0.0314 STA. 134+28.82 TO STA. 135+05.65

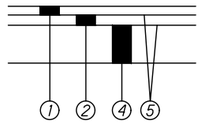

TEMPORARY PARKING LOT AND DRIVE PAVEMENT DETAIL

NOTE: TEMPORARY PARKING LOT AND DRIVE PAVEMENT BUILD-UP SHALL BE USED FOR TEMPORARY PAVEMENT AT 7909 OLD ROCKSIDE ROAD, 7919 OLD ROCKSIDE ROAD, AND TEMPORARY CVSR DRIVE.

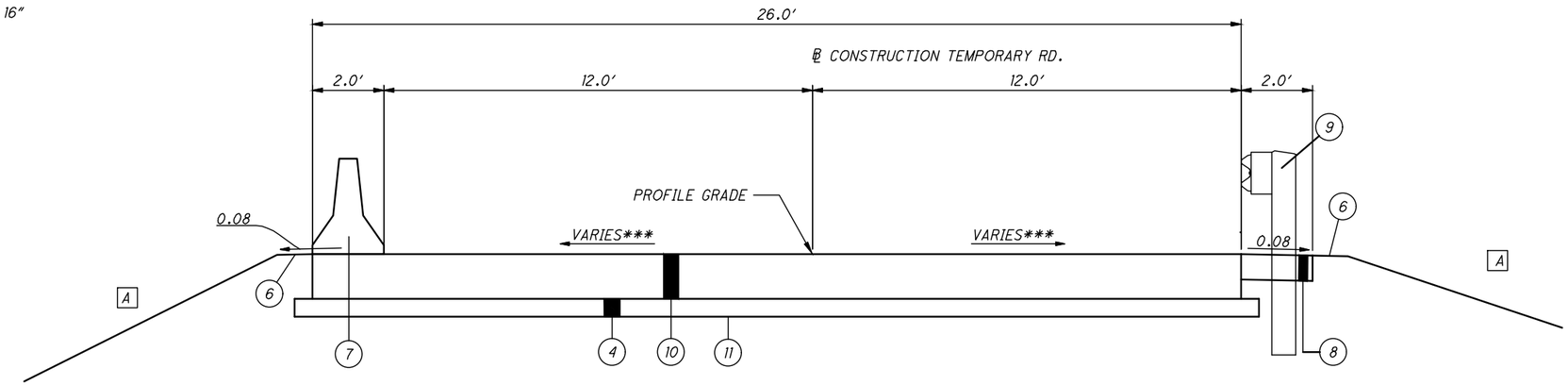

PROPOSED APPROACH SLAB SECTION
STA. 130+60.71 TO STA. 130+85.71
STA. 132+89.86 TO STA. 133+14.86

*** 0.0125 TO 0.00 STA. 130+60.71 TO STA. 130+80.92
0.00 STA. 130+80.92 TO STA. 130+85.71
0.00 STA. 132+89.86 TO STA. 133+14.86

CALCULATED VLE
CHECKED JTP

TYPICAL SECTION - TEMPORARY ROAD

CUY - OLD ROCKSIDE ROAD

P:\PR57030\Cadd\Sheets\ORR_91563_MY001.dwg 02-Sep-21 5:56 PM

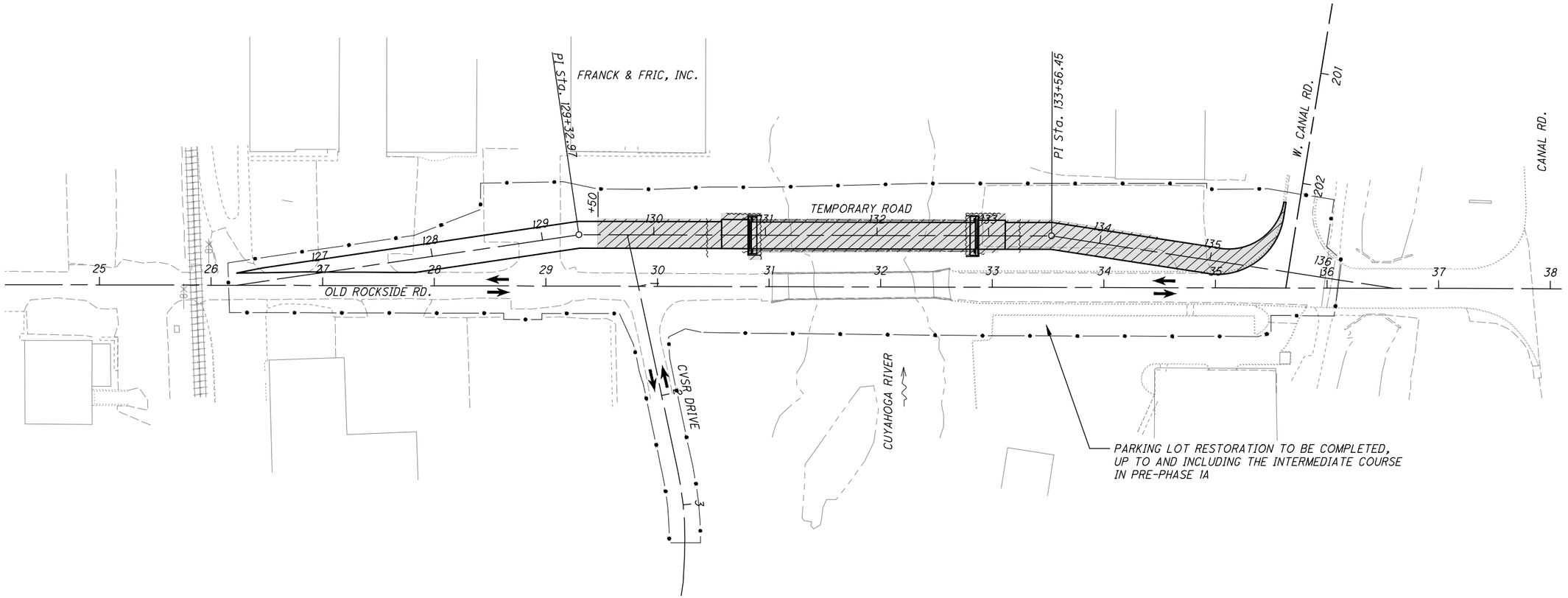

NOTE:

1. SEE SEQUENCE OF CONSTRUCTION NOTE ON SHEET 14 FOR NARRATIVE.
2. SEE SCHEMATIC PLAN SHEET 2 AND MOT PLAN AND PROFILE SHEETS 22 TO 24 FOR BEARINGS AND STATION EQUATIONS.

LEGEND

TEMPORARY PAVEMENT AND BRIDGE COMPLETED IN PHASE 1A

CONSTRUCTION LIMITS

HORIZONTAL SCALE IN FEET
0 25 50 100

CALCULATED RMP
CHECKED JTP

MAINTENANCE OF TRAFFIC PHASING PLAN - PHASE 1A

CUY - OLD ROCKSIDE ROAD

17
157

P:\PR57030\Cadd\Sheets\ORR_91563_MP004.dwg 02-Sep-21 5:57 PM

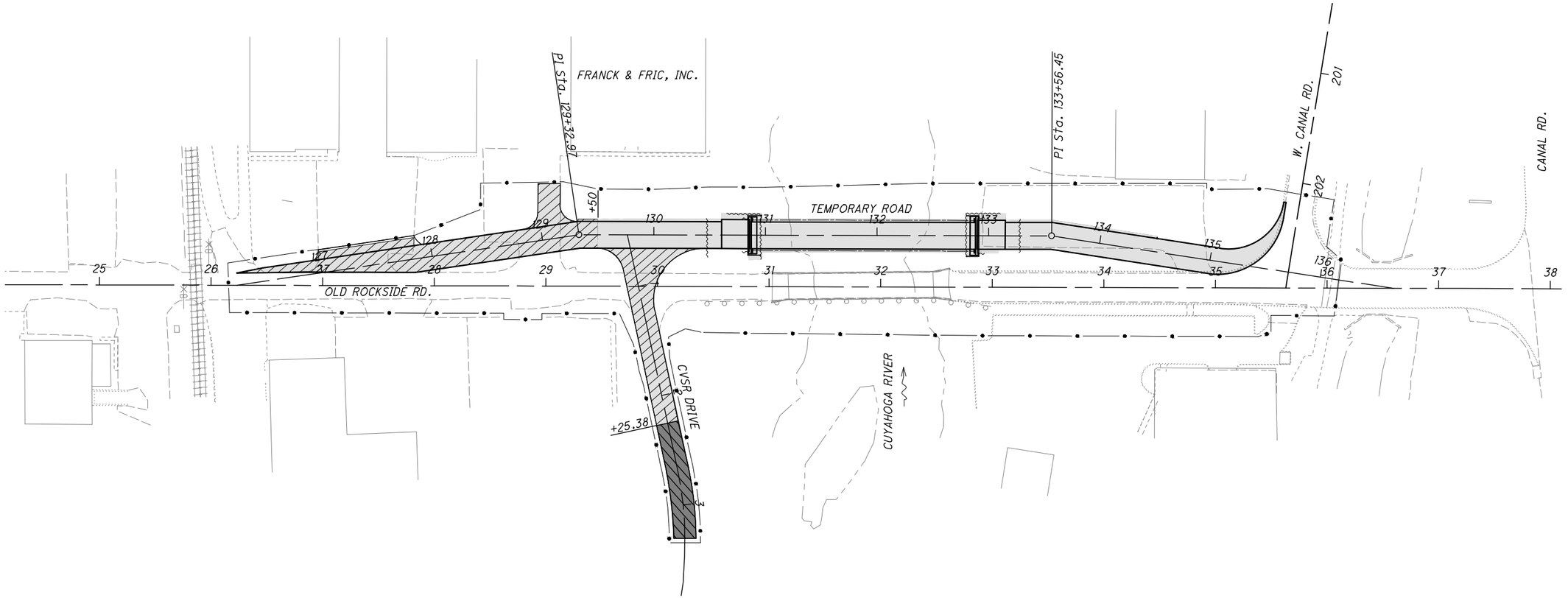

NOTE:

1. SEE SEQUENCE OF CONSTRUCTION NOTE ON SHEET 14 FOR NARRATIVE.
2. SEE SCHEMATIC PLAN SHEET 2 AND MOT PLAN AND PROFILE SHEETS 22 TO 24 FOR BEARINGS AND STATION EQUATIONS.

LEGEND

- TEMPORARY WORK COMPLETED IN PHASE 1B
- PERMANENT WORK COMPLETED IN PHASE 1B
- TEMPORARY WORK COMPLETED IN PREVIOUS PHASE
- CONSTRUCTION LIMITS

HORIZONTAL SCALE IN FEET
0 25 50 100

CALCULATED RMP
CHECKED JTP

MAINTENANCE OF TRAFFIC PHASING PLAN - PHASE 1B

CUY - OLD ROCKSIDE ROAD

P:\PR57030\Cadd\Sheets\ORR_91563_MP005.dwg 02-Sep-21 5:58 PM

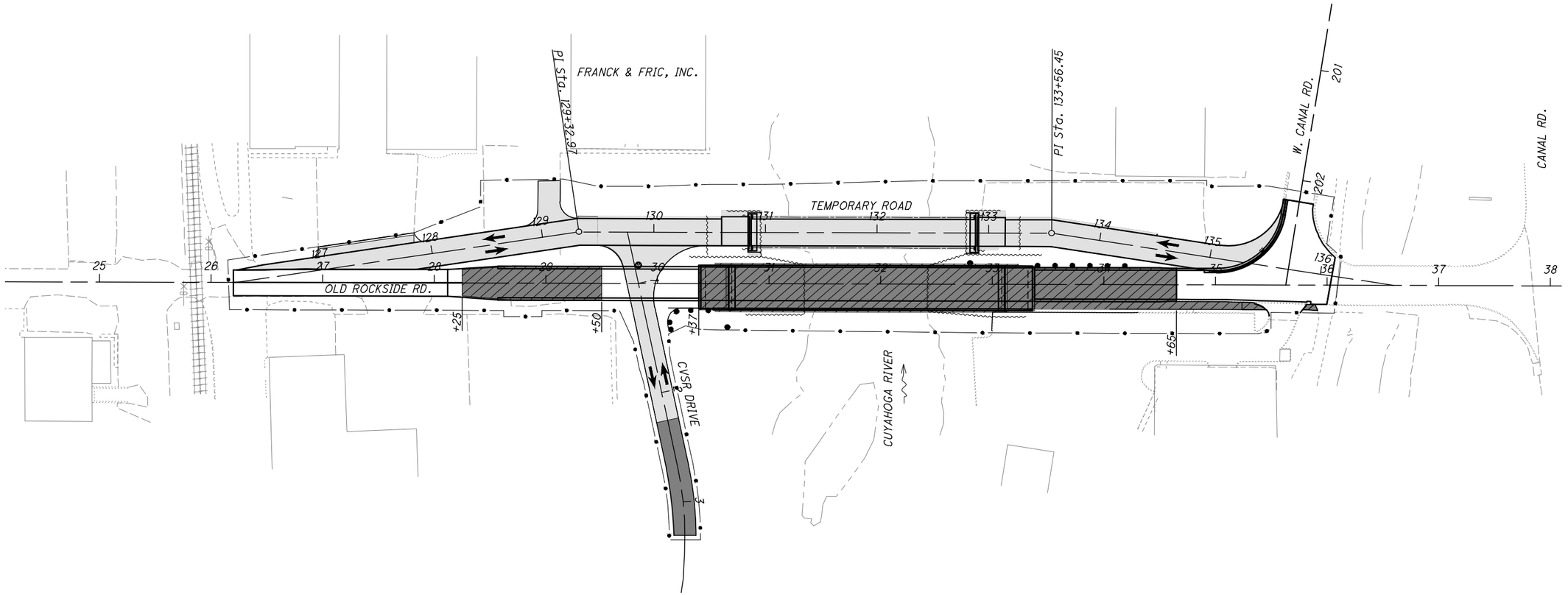

NOTE:

1. SEE SEQUENCE OF CONSTRUCTION NOTE ON SHEET 14 FOR NARRATIVE.
2. SEE SCHEMATIC PLAN SHEET 2 AND MOT PLAN AND PROFILE SHEETS 22 TO 24 FOR BEARINGS AND STATION EQUATIONS.

LEGEND

- PERMANENT WORK COMPLETED IN PHASE 2A
- PERMANENT WORK COMPLETED IN PREVIOUS PHASES
- TEMPORARY WORK COMPLETED IN PREVIOUS PHASES
- CONSTRUCTION LIMITS

HORIZONTAL SCALE IN FEET
0 25 50 100

CALCULATED RMP
CHECKED JTP

MAINTENANCE OF TRAFFIC PHASING PLAN - PHASE 2A

CUY - OLD ROCKSIDE ROAD

P:\PR57030\Cadd\Sheets\ORR_91563_MP006.dwg 02-Sep-21 5:59 PM

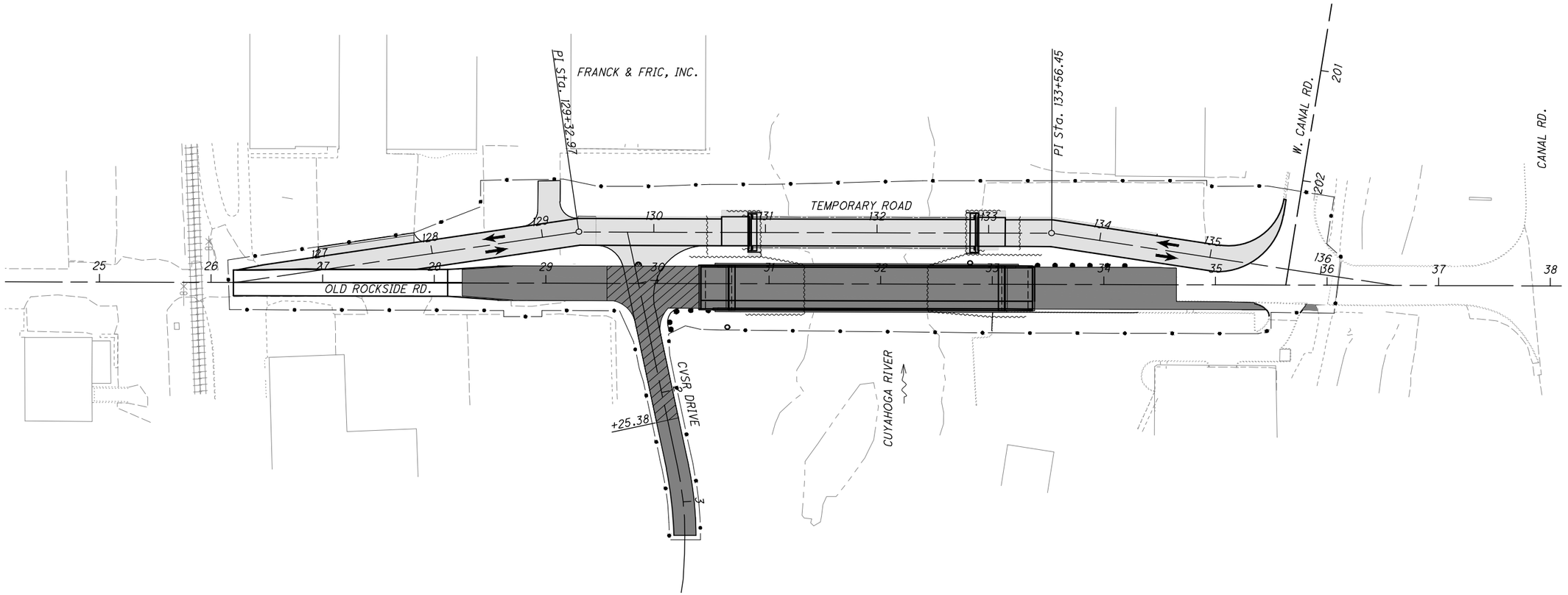

NOTE:

1. SEE SEQUENCE OF CONSTRUCTION NOTE ON SHEET 14 FOR NARRATIVE.
2. SEE SCHEMATIC PLAN SHEET 2 AND MOT PLAN AND PROFILE SHEETS 22 TO 24 FOR BEARINGS AND STATION EQUATIONS.

LEGEND

- PERMANENT WORK COMPLETED IN PHASE 2B
- PERMANENT WORK COMPLETED IN PREVIOUS PHASES
- TEMPORARY WORK COMPLETED IN PREVIOUS PHASES
- CONSTRUCTION LIMITS

HORIZONTAL SCALE IN FEET
0 25 50 100

CALCULATED RMP
CHECKED JTP

MAINTENANCE OF TRAFFIC PHASING PLAN - PHASE 2B

CUY - OLD ROCKSIDE ROAD

P:\PR57030\Cadd\Sheets\ORR_91563_MP007.dwg 02-Sep-21 6:00 PM

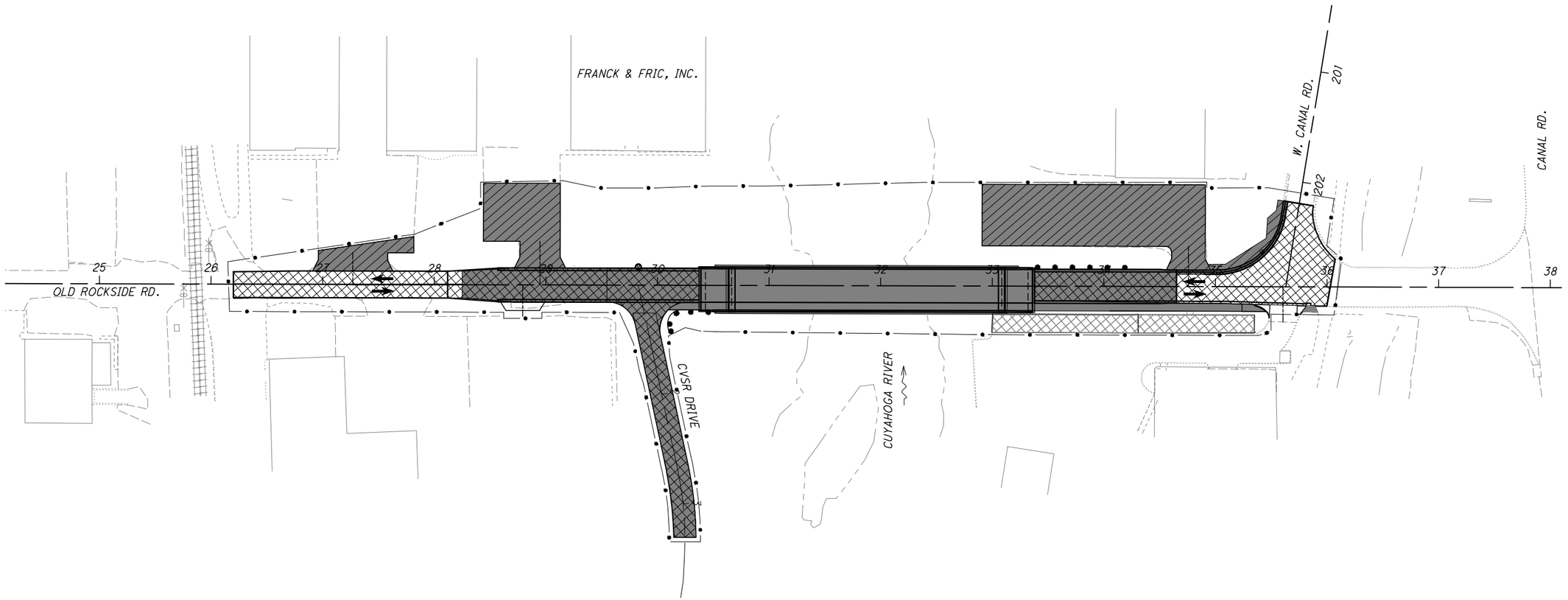

NOTE:

1. SEE SEQUENCE OF CONSTRUCTION NOTE ON SHEET 14 FOR NARRATIVE.
2. SEE SCHEMATIC PLAN SHEET 2 AND MOT PLAN AND PROFILE SHEETS 22 TO 24 FOR BEARINGS AND STATION EQUATIONS.

LEGEND

- PERMANENT WORK COMPLETED IN PHASE 3
- PERMANENT WORK COMPLETED IN PREVIOUS PHASES
- ASPHALT SURFACE COURSE COMPLETED IN PHASE 3
- CONSTRUCTION LIMITS

HORIZONTAL SCALE IN FEET
0 25 50 100

CALCULATED RMP
CHECKED JTP

MAINTENANCE OF TRAFFIC PHASING PLAN - PHASE 3

CUY - OLD ROCKSIDE ROAD

P:\PR57030\Cadd\Sheets\ORR_91563_MP008.dwg 02-Sep-21 6:01 PM

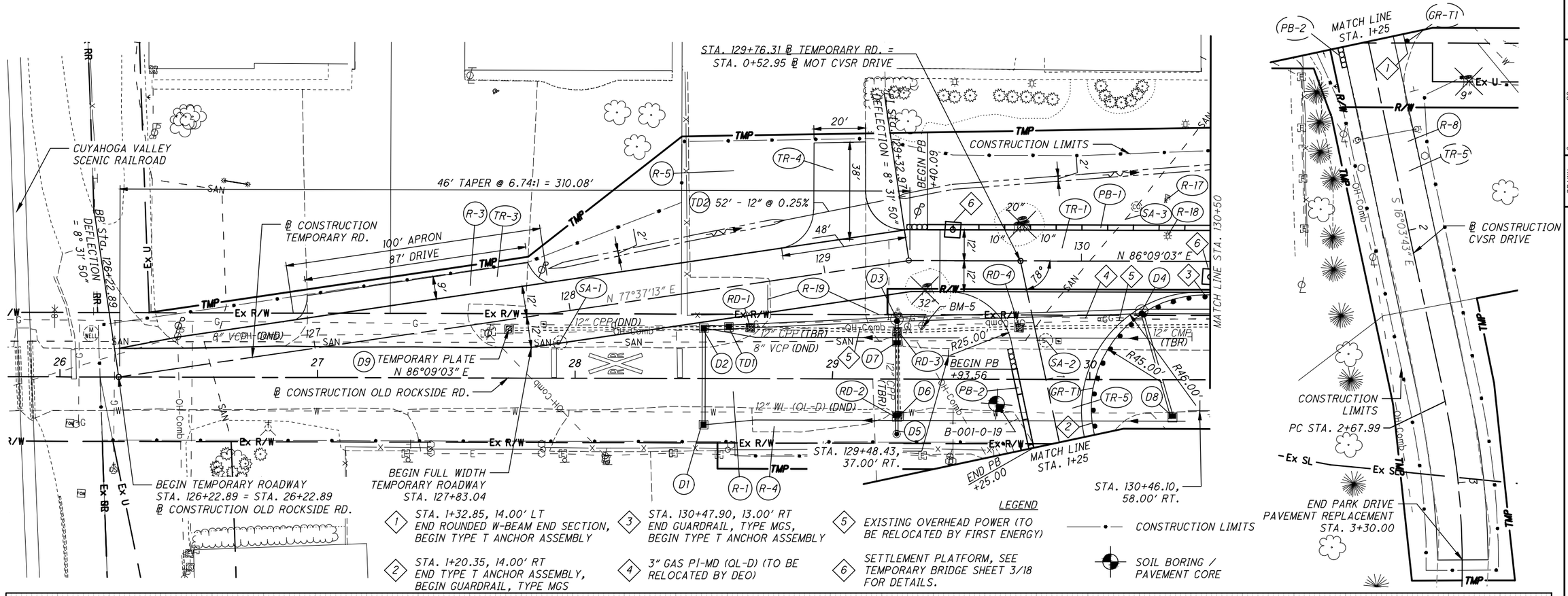

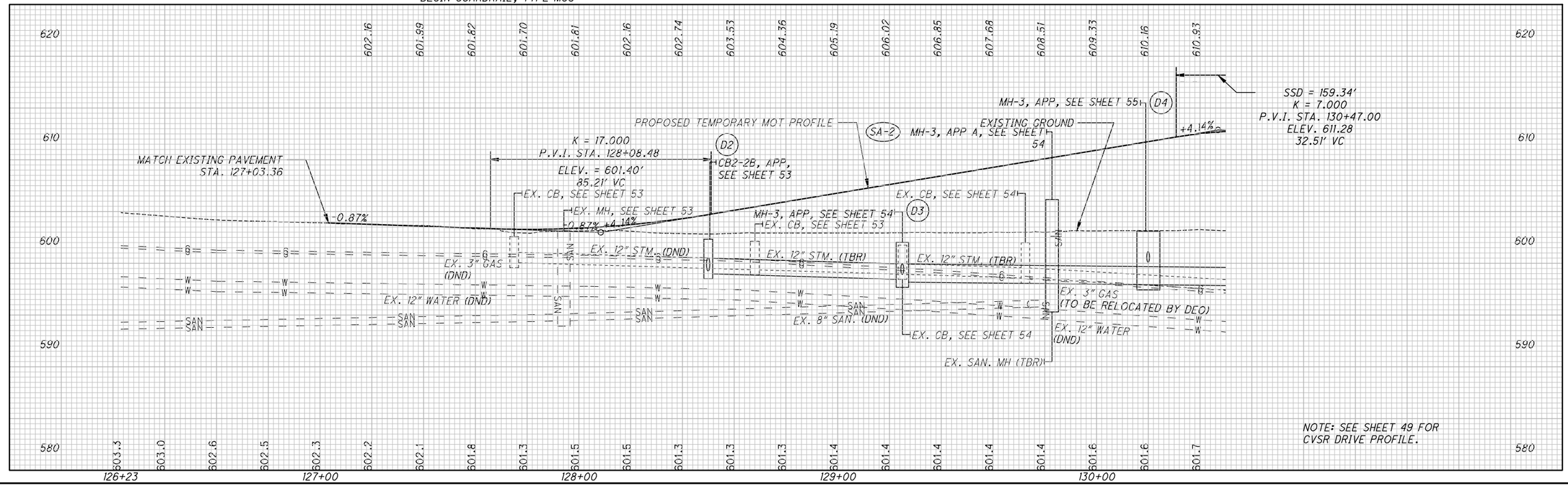

NOTE: SEE SHEET 49 FOR CVSR DRIVE PROFILE.

HORIZONTAL SCALE IN FEET
0 10 20 40

DRAWN VLE CHECKED JTP

MAINTENANCE OF TRAFFIC TEMPORARY RD. PLAN & PROFILE STA. 126+22.89 TO 130+50

CUY - OLD ROCKSIDE ROAD

22 / 157

P:\PR57030\Cadd\Sheets\ORR_91563_MP001.dwg 02-Sep-21 6:02 PM

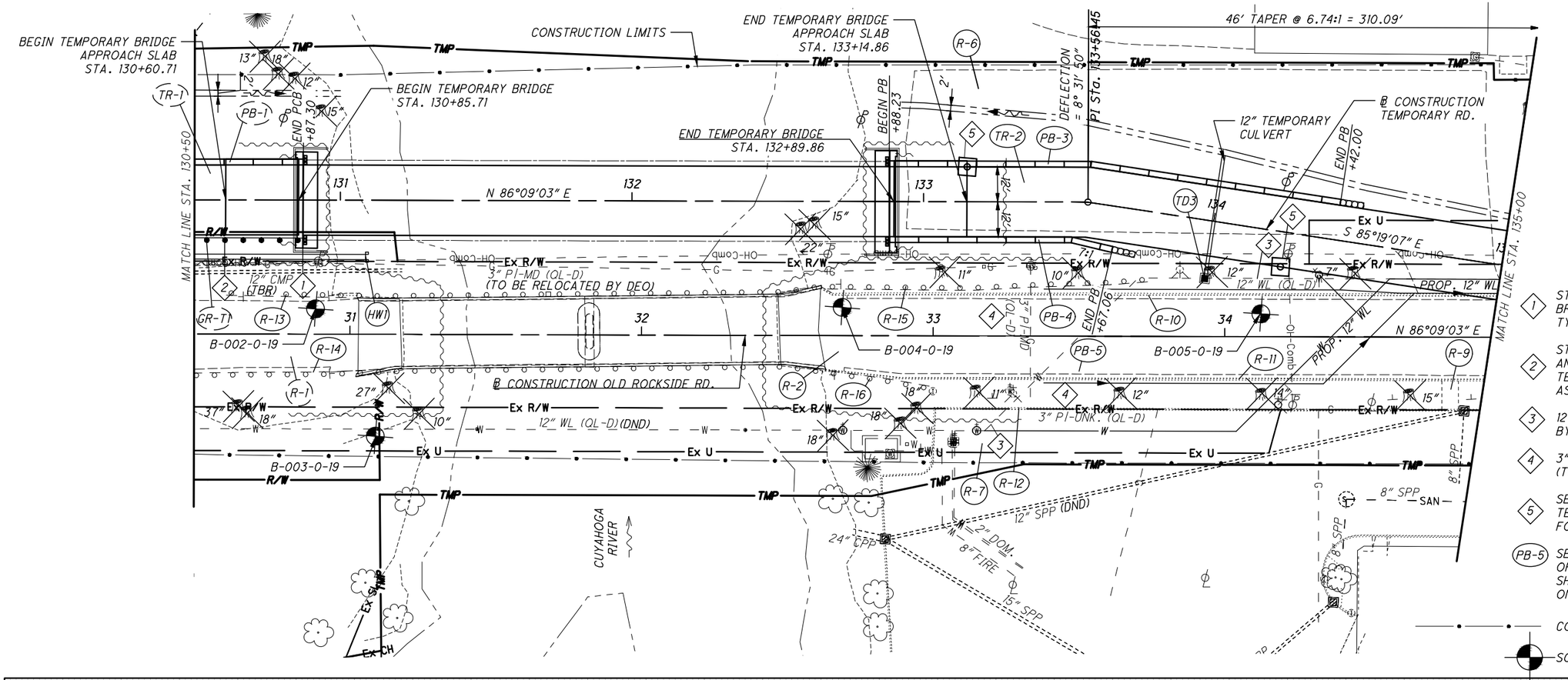

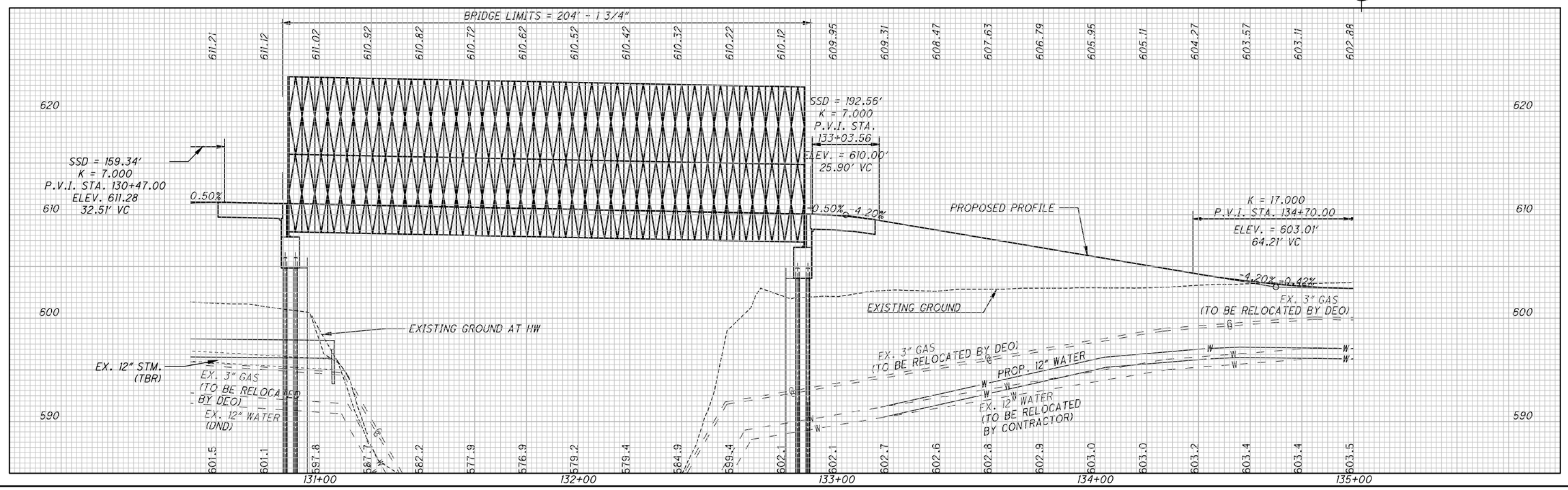

HORIZONTAL SCALE IN FEET
0 10 20 40
DRAWN VLE CHECKED JTP

MAINTENANCE OF TRAFFIC TEMPORARY RD. PLAN & PROFILE STA. 130+50 TO 135+00

CUY - OLD ROCKSIDE ROAD

23 / 157

P:\PR57030\Cadd\Sheets\ORR_91563_MP002.dwg 02-Sep-21 6:04 PM

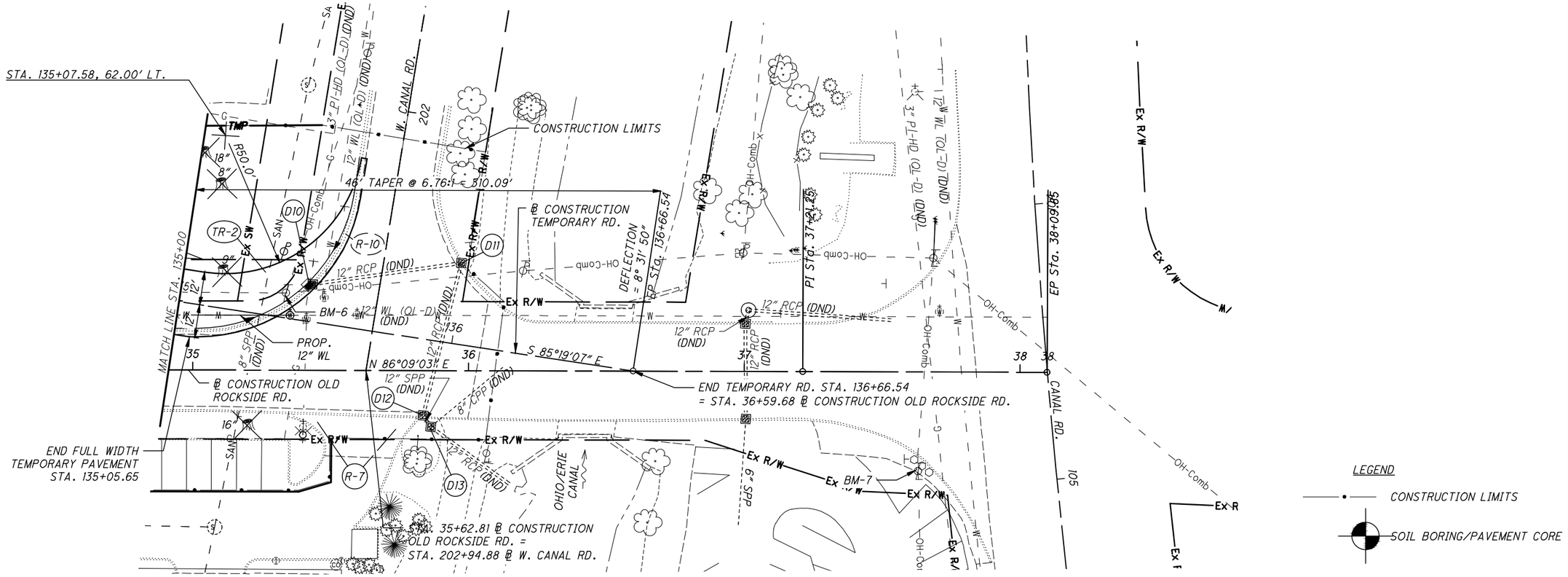

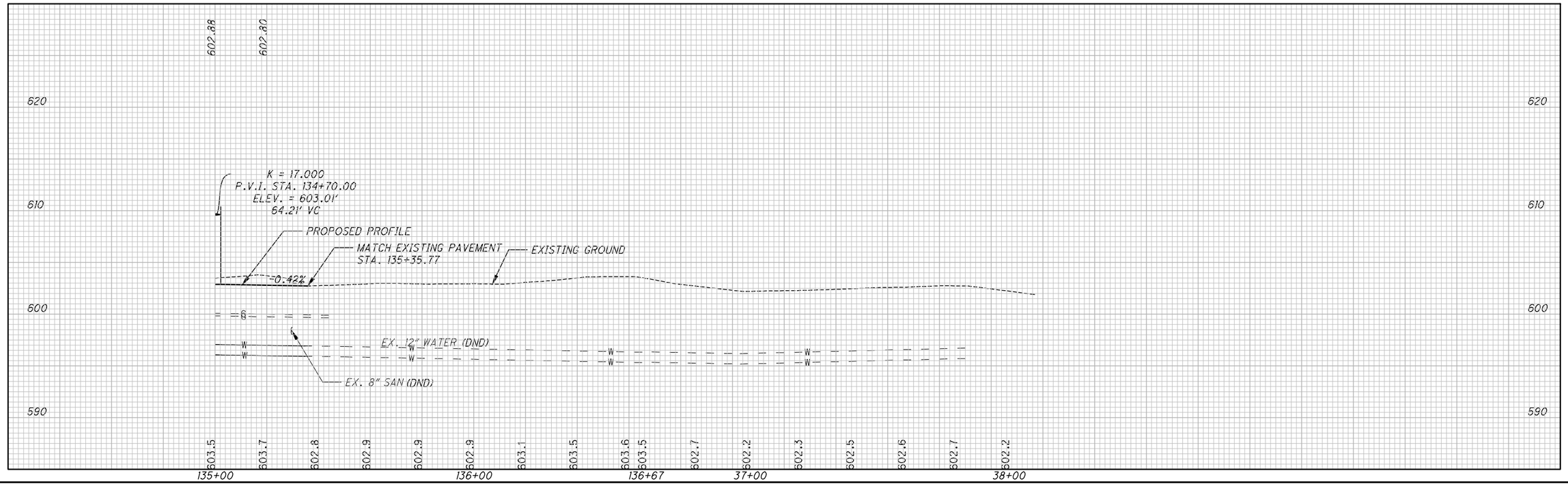

HORIZONTAL SCALE IN FEET
0 10 20 40

DRAWN VLE
CHECKED JTP

MAINTENANCE OF TRAFFIC TEMPORARY RD.
PLAN & PROFILE STA. 135+00 TO 136+66.54

CUY - OLD ROCKSIDE ROAD

P:\PR57030\Cadd\Sheets\ORR_91563_MP003.dwg 02-Sep-21 6:06 PM

SEEDING END WIDTH	SEEDING SQ. YDS.
1	3
0	0
0	0
3	

℄ CONSTRUCTION TEMPORARY RD.

610 / 605 / 600 / 595 / 590

TMP — EX R/W — EX. 3" GAS (DND) — EX. 12 WATER (DND) — EX. 8" SAN. (DND)

601.90
127+50.00
601.9

602.30
127+00.00
602.3

602.80
126+50.00
602.8

603.30
126+22.89
603.3

NOTE: ITEM 670 - SLOPE EROSION PROTECTION MAT, TYPE B SHALL BE INSTALLED ON ALL SURFACES 4:1 OR STEEPER

BEGIN TEMPORARY PAVEMENT

60 50 40 30 20 10 10 20 30 40 50 60

END AREA CUT	END AREA FILL	VOLUME CUT	VOLUME FILL
30	0	41	0
14	0	20	0
7	0	4	0
0	0	0	0
		65	0

CALCULATED VLE
CHECKED JTP

MAINTENANCE OF TRAFFIC TEMPORARY RD.
CROSS SECTIONS STA. 126+22.89 TO STA. 127+50

CUY - OLD
ROCKSIDE ROAD

25
157

P:\PR57030\Cadd\Sheets\ORR_91563_XM001.dwg 02-Sep-21 6:08 PM

SEEDING	
END WIDTH	SQ. YDS.
42	156
14	81
15	59
6	20
1	316

END AREA	
CUT	FILL
9	219
1	141
2	28
28	0
3	157
30	0

VOLUME	
CUT	FILL
10	334
28	26
54	0
95	517

CALCULATED VLE
CHECKED JTP

MAINTENANCE OF TRAFFIC TEMPORARY RD.
CROSS SECTIONS STA. 128+00 TO STA. 129+50

CUY - OLD ROCKSIDE ROAD

26
157

℄ CONSTRUCTION TEMPORARY RD.

RD3 EX. CATCH BASIN
STA. 129+24.49, 26.59' RT.
EX. 12" W&E 597.37
EX. 12" S 597.42
(TBR)

PB-1

D7 CB-3, APP, SEE SHEET 54

D6 CB-3, APP, SEE SHEET 54

RD2 EX. CATCH BASIN
STA. 129+20.48, 59.08' RT.
EX. 12" N 597.78
(TBR)

EX R/W

TMP

600.87

2:1

3:1

D3 MH-3, APP, SEE SHEET 54

EX. 3" GAS
(TO BE RELOCATED
BY DEO)

33' - 12" @ 1.10% (TBR)

EX. 12 WATER
(DND)

EX. 8" SAN. (DND)

D5 CB-7, APP, SEE SHEET 54

607.26
129+50.00
601.4

LEGEND

ITEM 204 - GEOGRID PLACED ABOVE
ITEM SPECIAL - SUBGRADE GEOTEXTILE FABRIC

ITEM 203 - GRANULAR MATERIAL, TYPE C

TEMPORARY DRIVE

PROP. 12" DRIVE PIPE

STA. 128+60.00, 15.32' RT.
TEMPORARY CB 2-2B, APP
GRATE ELEV. 602.02
12" (E/W) 597.51

TD1

EX. 3" GAS
(TO BE RELOCATED
BY DEO)

18" TYPE B

EX. 12" STM. (TBR)

EX. 8" SAN.
(DND)

EX. 12 WATER
(DND)

605.19
129+00.00
601.4

600.92

D2 CB2-2B, APP, SEE SHEET 53

EX. 3" GAS
(TO BE RELOCATED
BY DEO)

EX. 12" STM. (TBR)

603.12
128+50.00
601.3

EX. 8" SAN.
(DND)

D1 CB2-2B, APP,
SEE SHEET 53

EX. 12 WATER
(DND)

601.08

TEMPORARY PLATE

EX. 3" GAS
(DND)

D9 EX. CATCH BASIN
STA. 127+75.48, 3.79' RT.
GRATE 600.99
EX. 12" E 598.49
(DND)

SA-1 EX. SAN. MANHOLE
STA. 127+94.39, 11.74' RT.
RIM 601.56
EX. 8" E&W 592.86
(ATG)

EX. 12 WATER
(DND)

601.81
128+00.00
601.5

NOTE: ITEM 670 - SLOPE EROSION PROTECTION MAT, TYPE B SHALL BE INSTALLED ON ALL SURFACES 4:1 OR STEEPER

NOTE: FINAL OLD ROCKSIDE RD. SUBGRADE, EARTHWORK, AND DRAINAGE STRUCTURES SHOWN TO REPRESENT RELATIONSHIP TO TEMPORARY ROAD ONLY. NO FINAL ROADWAY AND BRIDGE CONSTRUCTION ITEMS SHALL BEGIN UNTIL CONSTRUCTION OF TEMPORARY ROAD IS COMPLETED UNLESS OTHERWISE NOTED IN THE SEQUENCE OF CONSTRUCTION NOTE.

610 605 600 595 590

60 50 40 30 20 10 10 20 30 40 50 60

P:\PR57030\Cadd\Sheets\ORR_91563_XM002.dwg 02-Sep-21 6:09 PM

SEEDING END WIDTH	SEEDING SQ. YDS.
41	48
39	184
27	192
42	424

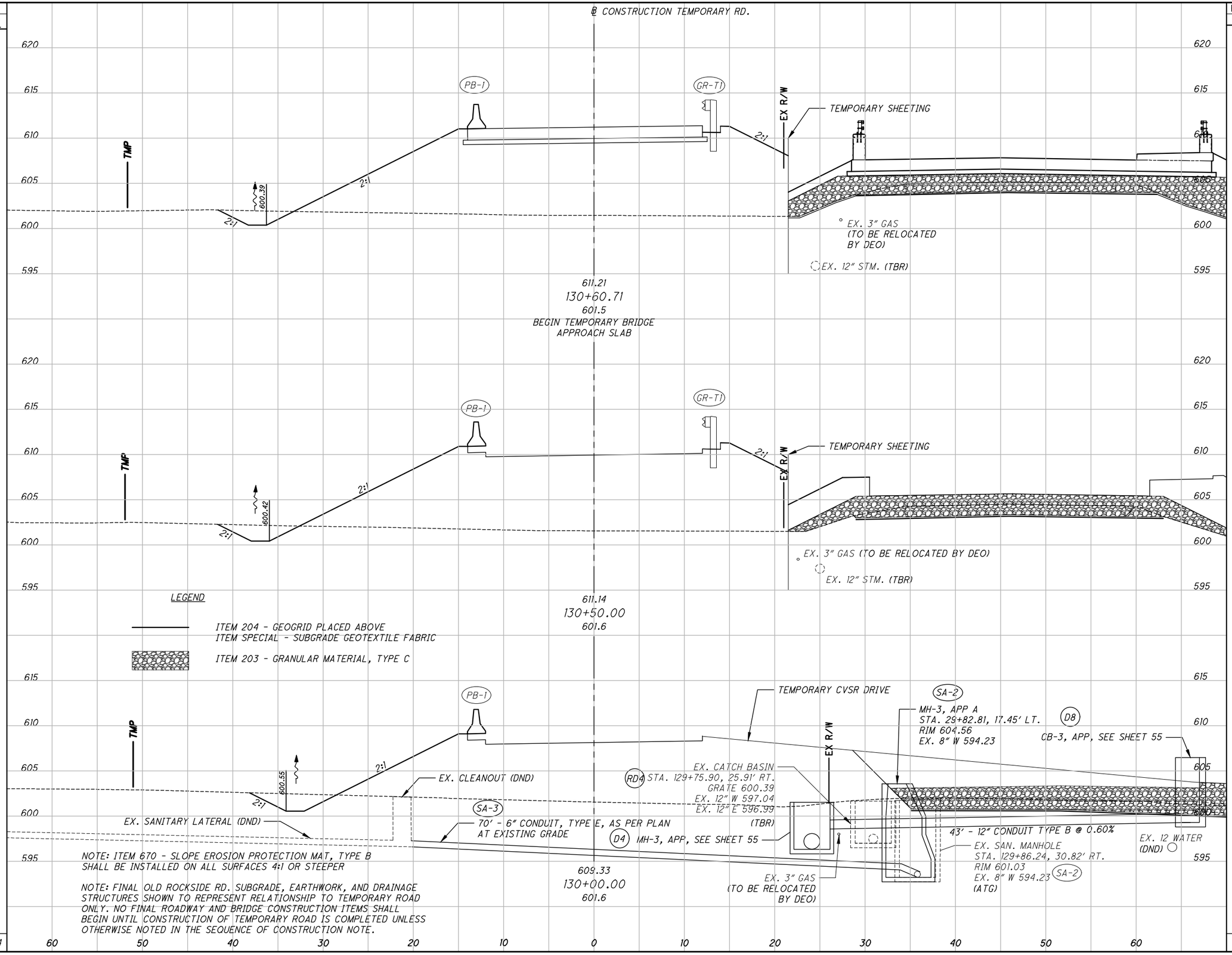

END AREA CUT	END AREA FILL	VOLUME CUT	VOLUME FILL
8	385		
		4	154
10	388		
		20	569
11	226		
		19	825
9	219		
		43	1548

CALCULATED VLE
CHECKED JTP

MAINTENANCE OF TRAFFIC TEMPORARY RD.
CROSS SECTIONS STA. 130+00 TO STA. 130+60.71

CUY - OLD ROCKSIDE ROAD

27
157

P:\PR57030\Cadd\Sheets\ORR_91563_XM003.dwg 02-Sep-21 6:11 PM

SEEDING	
END WIDTH	SQ. YDS.
23	153
32	118
28	271

℄ CONSTRUCTION TEMPORARY RD.

TMP

PB-3

EX R/W

STA. 134+00.00, 19.90' RT.
TEMPORARY CB 2-2B, APP
GRATE ELEV. 604.18
12" (NE) 602.22
TD3

601.91
2:1
2:1
3:1
43' - 12" TYPE A @0.60%

605.95
134+00.00
603.0

EX. 12" WATER
(TO BE RELOCATED
BY CONTRACTOR)

TMP

PB-3

PB-4

EX R/W

601.72
2:1
2:1
3:1

EX. 3" GAS (TO BE RELOCATED BY DEO)

608.05
133+50.00
602.8

EX. 12" WATER (TO BE RELOCATED BY CONTRACTOR)

TEMPORARY SHEETING

TMP

PB-3

PB-4

EX R/W

601.54
2:1
2:1
3:1

EX. 3" GAS
(TO BE RELOCATED
BY DEO)

609.51
133+14.86
602.6
END TEMPORARY BRIDGE
APPROACH SLAB

NOTE: ITEM 670 - SLOPE EROSION PROTECTION MAT, TYPE B SHALL BE INSTALLED ON ALL SURFACES 4:1 OR STEEPER

NOTE: FINAL OLD ROCKSIDE RD. SUBGRADE, EARTHWORK, AND DRAINAGE STRUCTURES SHOWN TO REPRESENT RELATIONSHIP TO TEMPORARY ROAD ONLY. NO FINAL ROADWAY AND BRIDGE CONSTRUCTION ITEMS SHALL BEGIN UNTIL CONSTRUCTION OF TEMPORARY ROAD IS COMPLETED UNLESS OTHERWISE NOTED IN THE SEQUENCE OF CONSTRUCTION NOTE.

615 / 610 / 605 / 600 / 595

60 50 40 30 20 10 0 10 20 30 40 50 60

END AREA		VOLUME	
CUT	FILL	CUT	FILL
12	61		
		18	214
7	170		
		8	257
4	224		
		26	471

CALCULATED VLE
CHECKED JTP

MAINTENANCE OF TRAFFIC TEMPORARY RD.
CROSS SECTIONS STA. 132+87.91 TO STA. 133+50

CUY - OLD
ROCKSIDE ROAD

28
157

P:\PR57030\Cadd\Sheets\ORR_91563_XM004.dwg 02-Sep-21 6:12 PM

SEEDING	
END WIDTH	SQ. YDS.
0	
	34
12	
	70
13	
	100
23	
	204

℄ CONSTRUCTION TEMPORARY RD.

END TEMPORARY PAVEMENT
STA. 135+59.57

610
605
600
595
615

-5.88%

EX R/W

EX. 8" SAN. (DND)

135+50.00
602.8

2:1
602.69

EX R/W

EX R/W

EX. 3" GAS ◦
(TO BE RELOCATED
BY DEO)

EX. 12" WATER
(TO BE RELOCATED
BY CONTRACTOR)

PROP. 12" WATER

602.88
135+00.00
603.5

EX R/W

2:1
602.22
2:1
2:1

EX. 12" WATER
(TO BE RELOCATED
BY CONTRACTOR)

PROP. 12" WATER

EX. 3" GAS ◦
(TO BE RELOCATED
BY DEO)

603.89
134+50.00
603.3

NOTE: ITEM 670 - SLOPE EROSION PROTECTION MAT, TYPE B SHALL BE INSTALLED ON ALL SURFACES 4:1 OR STEEPER

NOTE: FINAL OLD ROCKSIDE RD. SUBGRADE, EARTHWORK, AND DRAINAGE STRUCTURES SHOWN TO REPRESENT RELATIONSHIP TO TEMPORARY ROAD ONLY. NO FINAL ROADWAY AND BRIDGE CONSTRUCTION ITEMS SHALL BEGIN UNTIL CONSTRUCTION OF TEMPORARY ROAD IS COMPLETED UNLESS OTHERWISE NOTED IN THE SEQUENCE OF CONSTRUCTION NOTE.

60 50 40 30 20 10 0 10 20 30 40 50 60

END AREA	
CUT	FILL
29	0
67	0
30	1
12	61

VOLUME	
CUT	FILL
89	0
90	1
39	58
218	59

CALCULATED VLE
CHECKED JTP

MAINTENANCE OF TRAFFIC TEMPORARY RD. CROSS SECTIONS STA. 134+00 TO STA. 135+00

CUY - OLD ROCKSIDE ROAD

29
157

P:\PR57030\Cadd\Sheets\ORR_91563_XM005.dwg 02-Sep-21 6:13 PM

SEEDING	
END WIDTH	SQ. YDS.
24	73
28	88
35	161

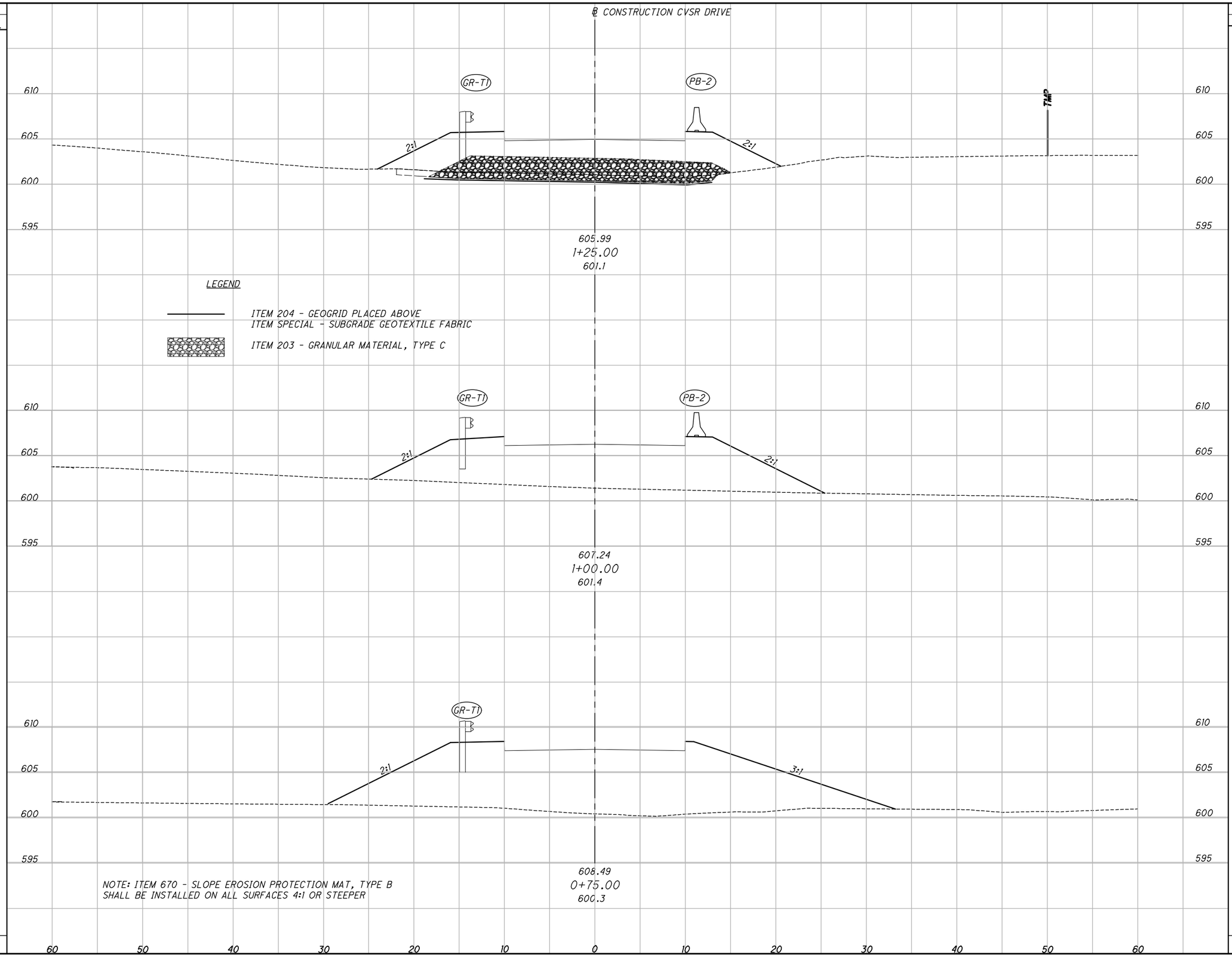

END AREA		VOLUME	
CUT	FILL	CUT	FILL
0	90		
		0	130
0	189		
		0	229
0	305		
		0	359

CALCULATED SAF
CHECKED JTP

MOT CROSS SECTION - CVSR DRIVE STA. 0+75 TO STA. 1+25

CUY - OLD ROCKSIDE ROAD

30
157

P:\PR57030\Cadd\Sheets\ORR_91563_XM101.dwg 02-Sep-21 6:15 PM

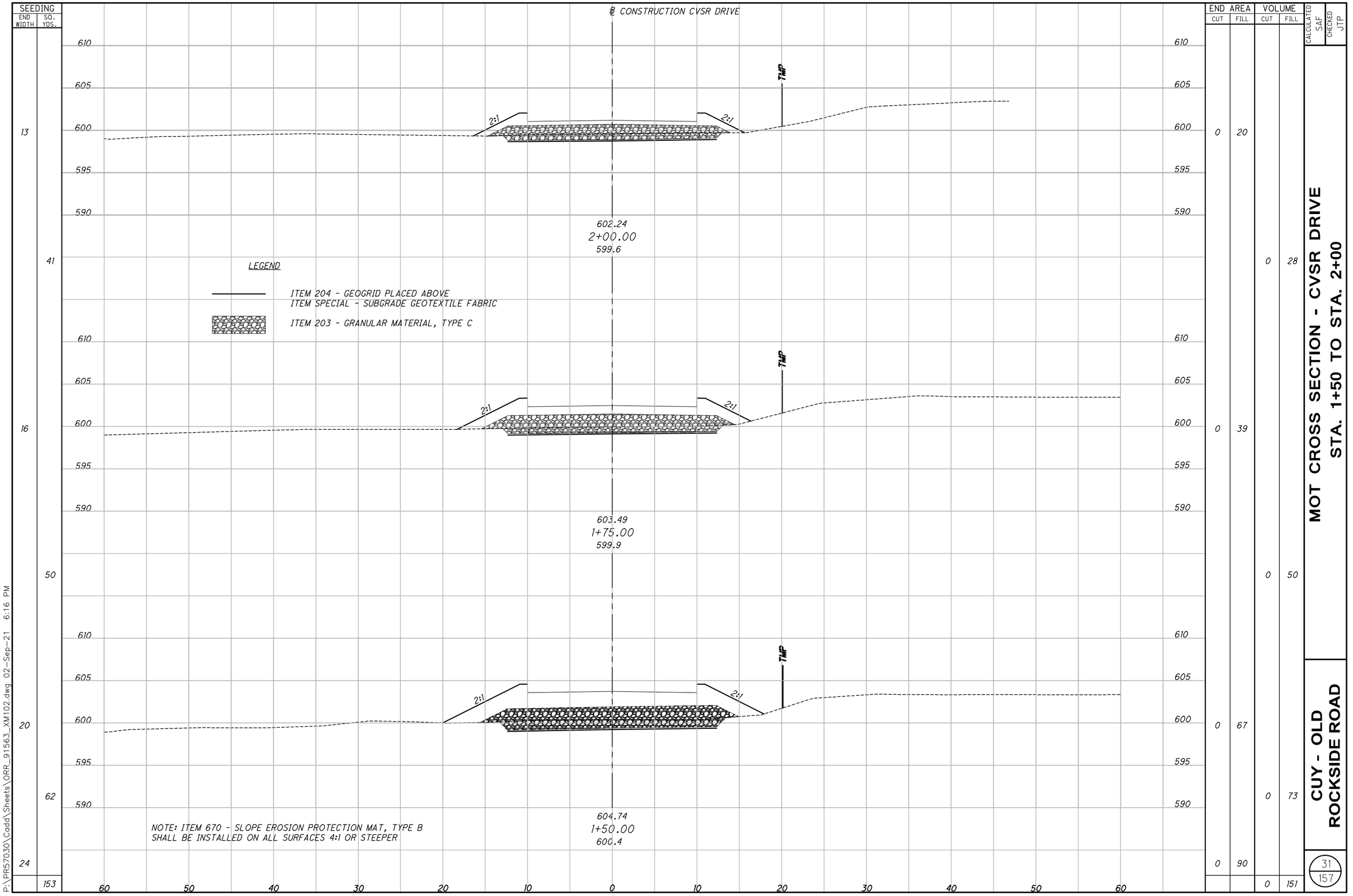

SEEDING END WIDTH	SEEDING SQ. YDS.	END AREA CUT	END AREA FILL	VOLUME CUT	VOLUME FILL
13	41	0	20	0	28
16	50	0	39	0	50
20	62	0	67	0	73
24	153	0	90	0	151

CALCULATED SAF
CHECKED JTP

MOT CROSS SECTION - CVSR DRIVE STA. 1+50 TO STA. 2+00

CUY - OLD ROCKSIDE ROAD

31
157

P:\PR57030\Cadd\Sheets\ORR_91563_XM102.dwg 02-Sep-21 6:16 PM

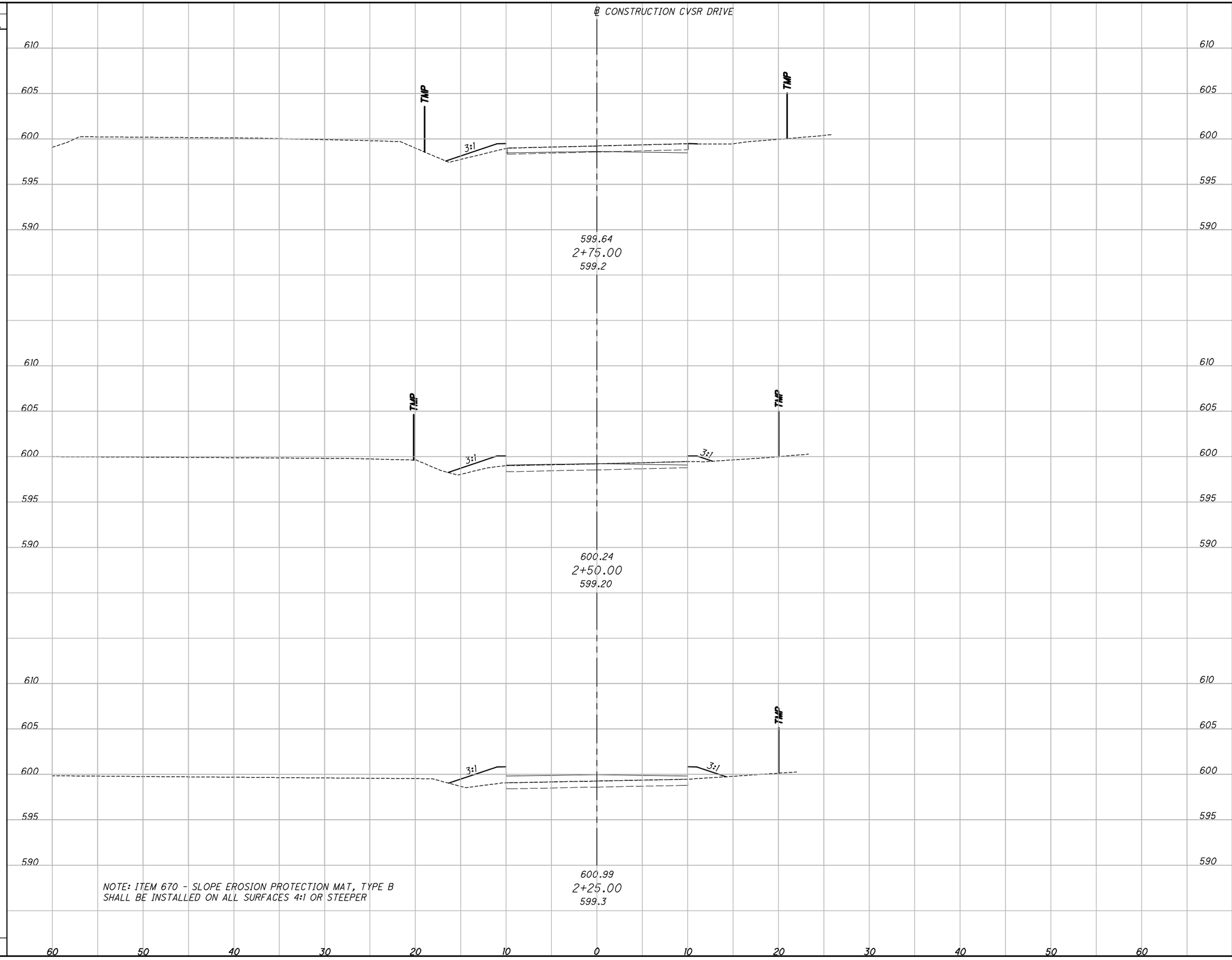

SEEDING END WIDTH	SEEDING SQ. YDS.	END AREA CUT	END AREA FILL	VOLUME CUT	VOLUME FILL
6	19	2	3	1	5
7	23	0	7	0	15
9	31	0	24	0	21
13	73	0	20	1	41

CALCULATED SAF
CHECKED JTP

MOT CROSS SECTION - CVSR DRIVE STA. 2+25 TO STA. 2+75

CUY - OLD ROCKSIDE ROAD

P:\PR57030\Cadd\Sheets\ORR_91563_XM103.dwg 02-Sep-21 6:18 PM

SEEDING	
END WIDTH	SQ. YDS.
5	17
5	16
6	33

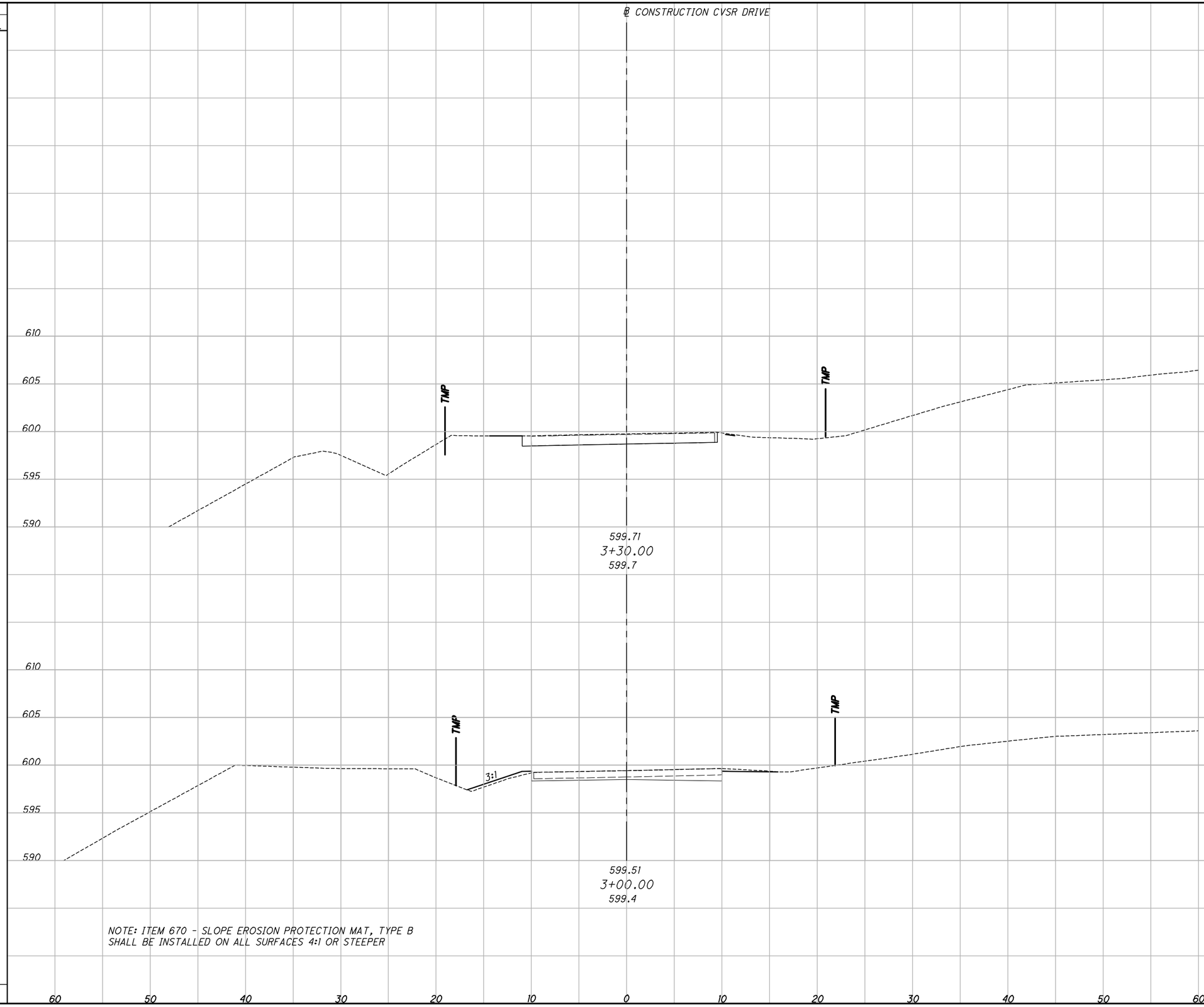

END AREA	
CUT	FILL
2	0
8	2
2	3

VOLUME	
CUT	FILL
6	2
5	3
11	5

CALCULATED SAF
CHECKED JTP

MOT CROSS SECTION - CVSR DRIVE
STA. 3+00 TO STA. 3+30

CUY - OLD ROCKSIDE ROAD

33
157

P:\PR57030\Cadd\Sheets\ORR_91563_XM104.dwg 02-Sep-21 6:19 PM

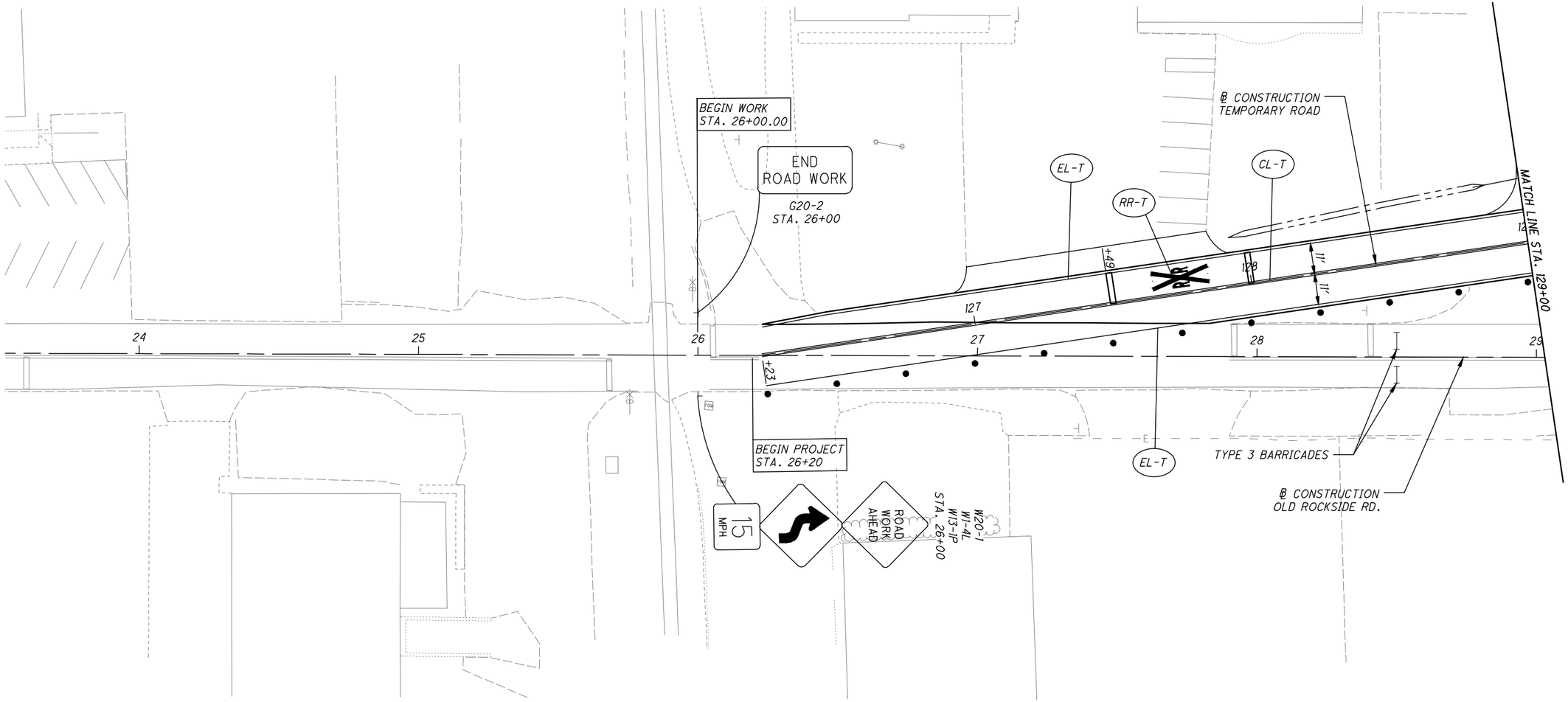

LEGEND

- DRUMS, MAX 25' SPACING
- PROPOSED SIGN

DRUMS AND SIGNS PAID FOR UNDER ITEM 614 - MAINTAINING TRAFFIC

- (EL-T) ITEM 614 - WORK ZONE EDGE LINE, CLASS I, 642 PAINT
- (CL-T) ITEM 614 - WORK ZONE CENTER LINE, CLASS I, 642 PAINT
- (SL-T) ITEM 614 - WORK ZONE STOP LINE, CLASS I, 642 PAINT
- (RR-T) ITEM 614 - WORK ZONE RAILROAD SYMBOL MARKING, CLASS I, 642 PAINT

HORIZONTAL SCALE IN FEET
0 10 20 40

CALCULATED RMP
CHECKED JTP

MAINTENANCE OF TRAFFIC - TEMPORARY ROAD
TRAFFIC CONTROL - STA. 126+23 TO STA. 129+00

CUY - OLD ROCKSIDE ROAD

P:\PR57030\Cadd\Sheets\ORR_91563_MP100.dwg 02-Sep-21 6:20 PM

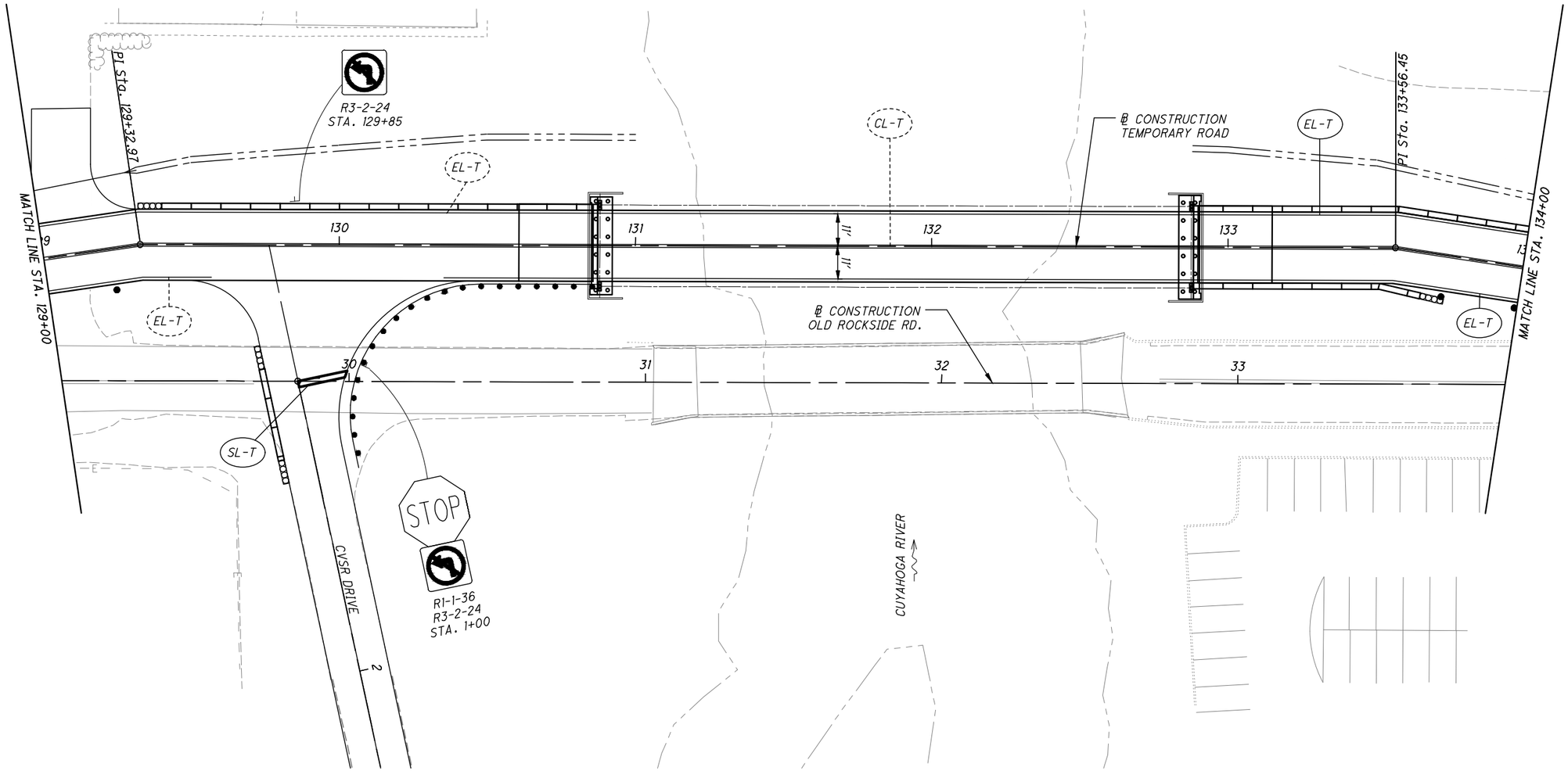

LEGEND

- DRUMS, MAX 25' SPACING
- PROPOSED SIGN
- IMPACT ATTENUATOR
- PORTABLE BARRIER

DRUMS AND SIGNS PAID FOR UNDER ITEM 614 - MAINTAINING TRAFFIC

- (EL-T) ITEM 614 - WORK ZONE EDGE LINE, CLASS I, 642 PAINT
- (CL-T) ITEM 614 - WORK ZONE CENTER LINE, CLASS I, 642 PAINT
- (SL-T) ITEM 614 - WORK ZONE STOP LINE, CLASS I, 642 PAINT

HORIZONTAL SCALE IN FEET
0 10 20 40

CALCULATED RMP
CHECKED JTP

MAINTENANCE OF TRAFFIC - TEMPORARY ROAD
TRAFFIC CONTROL - STA. 129+00 TO STA. 134+00

CUY - OLD ROCKSIDE ROAD

35
157

P:\PR57030\Cadd\Sheets\ORR_91563_MP101.dwg 02-Sep-21 6:21 PM

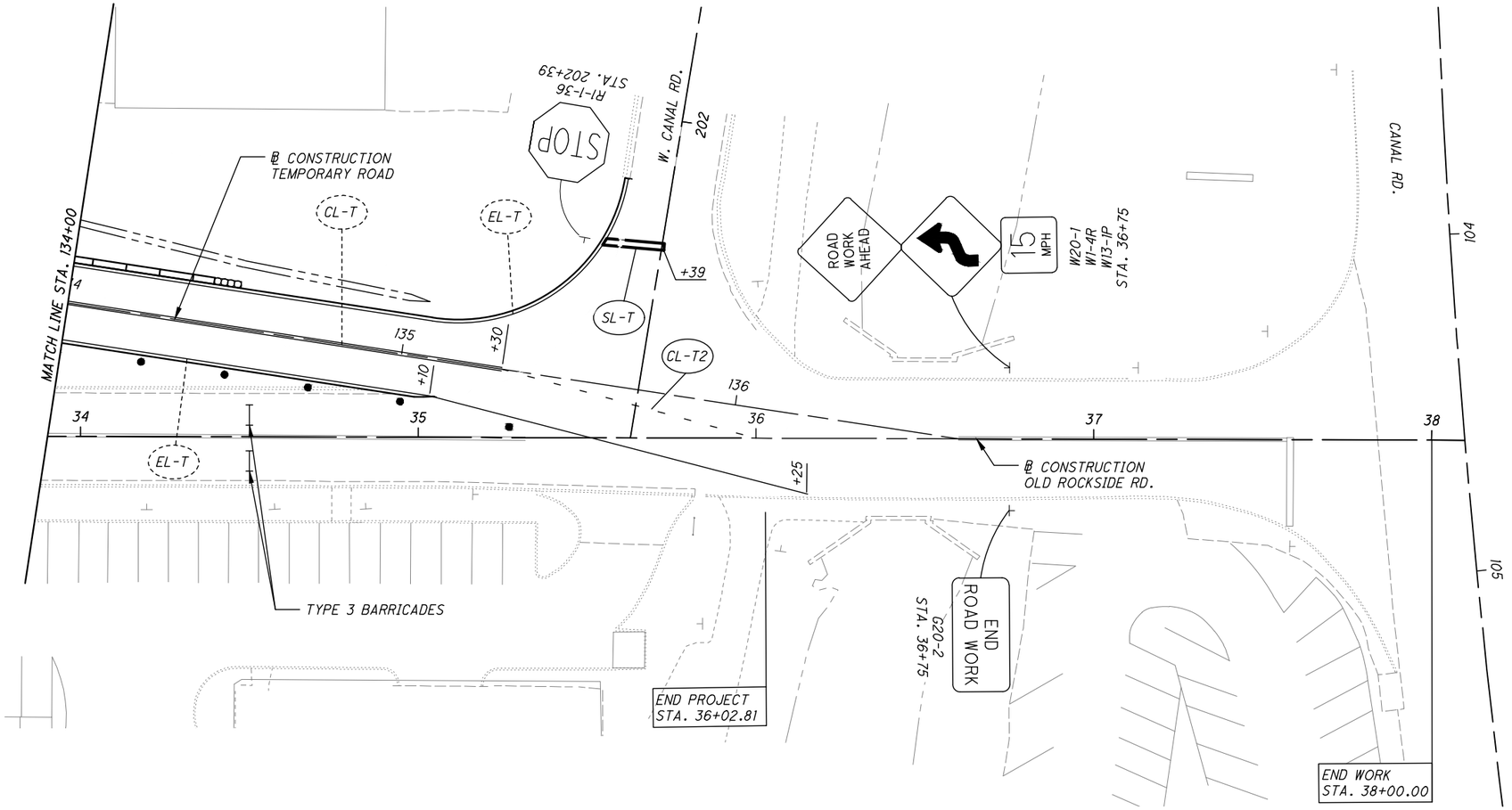

LEGEND

- DRUMS, MAX 25' SPACING
- PROPOSED SIGN
- IMPACT ATTENUATOR
- PORTABLE BARRIER

DRUMS AND SIGNS PAID FOR UNDER ITEM 614 - MAINTAINING TRAFFIC

- EL-T — ITEM 614 - WORK ZONE EDGE LINE, CLASS I, 642 PAINT
- CL-T — ITEM 614 - WORK ZONE CENTER LINE, CLASS I, 642 PAINT
- CL-T2 — ITEM 614 - WORK ZONE DOTTED LINE, CLASS I, 4", 642 PAINT
- SL-T — ITEM 614 - WORK ZONE STOP LINE, CLASS I, 642 PAINT

HORIZONTAL SCALE IN FEET
0 10 20 40

CALCULATED RMP
CHECKED JTP

MAINTENANCE OF TRAFFIC - TEMPORARY ROAD
TRAFFIC CONTROL - STA. 134+00 TO STA. 136+25

CUY - OLD ROCKSIDE ROAD

P:\PR57030\Cadd\Sheets\ORR_91563_MP102.dwg 02-Sep-21 6:21 PM

REF NO.	SHEET NUM. 8	9	10	11	12	40	41	42	44				PART. 01/BRF/BR	ITEM	ITEM EXT	GRAND TOTAL	UNIT	DESCRIPTION	SEE SHEET NO.
																		ROADWAY	
1	LS												LS	201	11000	LS	-	CLEARING AND GRUBBING	
2						13							13	SPECIAL	20126450	13	EACH	STUMP REMOVED, 4"-12"	
3						14							14	201	26500	14	EACH	STUMP REMOVED, 18"	
4						2							2	201	26510	2	EACH	STUMP REMOVED, 30"	
5						1							1	201	26520	1	EACH	STUMP REMOVED, 48"	
6						3,730							3,730	202	23000	3,730	SY	PAVEMENT REMOVED	
7						56							56	202	30000	56	SF	WALK REMOVED	
8						147							147	202	32000	147	FT	CURB REMOVED	8
9						387							387	202	32500	387	FT	CURB AND GUTTER REMOVED	
10							371						371	202	35100	371	FT	PIPE REMOVED, 24" AND UNDER	
11						256							256	202	38000	256	FT	GUARDRAIL REMOVED	
12							1						1	202	58000	1	EACH	MANHOLE REMOVED	
13							4						4	202	58100	4	EACH	CATCH BASIN REMOVED	
14						124							124	202	75000	124	FT	FENCE REMOVED	
15	1												1	202	75255	1	EACH	GATE REMOVED FOR REUSE, AS PER PLAN	8
16						1							1	202	98100	1	EACH	REMOVAL MISC.: FLAG POLE REMOVED	8
17						1							1	202	98100	1	EACH	REMOVAL MISC.: LIGHT REMOVED	8
18									3,070				3,070	203	10000	3,070	CY	EXCAVATION	
19									316				316	203	20001	316	CY	EMBANKMENT, AS PER PLAN	8
20								4,187					4,187	204	10000	4,187	SY	SUBGRADE COMPACTION	
21									426				426	204	30020	426	CY	GRANULAR MATERIAL, TYPE C	
22									856				856	204	51000	856	SY	GEOGRID	
23									856				856	SPECIAL	69012010	856	SY	GEOTEXTILE FABRIC	9
24	2,930												2,930	209	60201	2,930	SY	LINEAR GRADING, AS PER PLAN	8
25						37.5							37.5	606	15050	37.5	FT	GUARDRAIL, TYPE MGS	
26						1							1	606	26100	1	EACH	ANCHOR ASSEMBLY, TYPE E	
27						1							1	606	26500	1	EACH	ANCHOR ASSEMBLY, TYPE T	
28						2							2	606	35000	2	EACH	BRIDGE TERMINAL ASSEMBLY, TYPE 1	
29								1,146					1,146	608	10001	1,146	SF	4" CONCRETE WALK, AS PER PLAN	8
30						210							210	608	52000	210	SF	CURB RAMP	
31		1											1	623	40501	1	EACH	REFERENCE MONUMENT, AS PER PLAN	9
32		2											2	623	40520	2	EACH	RIGHT-OF-WAY MONUMENT	
																		EROSION CONTROL	
33			300										300	659	00300	300	CY	TOPSOIL	
34			2,930										2,930	659	10001	2,930	SY	SEEDING AND MULCHING, AS PER PLAN	10
35			130										130	659	14000	130	SY	REPAIR SEEDING AND MULCHING	
36			0.35										0.35	659	20000	0.35	TON	COMMERCIAL FERTILIZER	
37			0.06										0.06	659	31000	0.06	ACRE	LIME	
38			16										16	659	35000	16	MGAL	WATER	
39									535				535	670	00520	535	SY	SLOPE EROSION PROTECTION MAT, TYPE B	
40													LS	832	15000	LS	-	STORM WATER POLLUTION PREVENTION PLAN	
41													LS	832	15002	LS	-	STORM WATER POLLUTION PREVENTION INSPECTIONS	
42													LS	832	15010	LS	-	STORM WATER POLLUTION PREVENTION INSPECTION SOFTWARE	
43			60,000										60,000	832	30000	60,000	EACH	EROSION CONTROL	
																		DRAINAGE	
44							0.4						0.4	602	20000	0.4	CY	CONCRETE MASONRY	
45								852					852	605	14021	852	FT	6" BASE PIPE UNDERDRAINS WITH GEOTEXTILE FABRIC, AS PER PLAN	12
46				50									50	611	97400	50	FT	CONDUIT, MISC.: 6" CONDUIT, TYPE B, FOR DRAINAGE CONNECTION, AS PER PLAN	11
47				50									50	611	97400	50	FT	CONDUIT, MISC.: 6" CONDUIT, TYPE C, FOR DRAINAGE CONNECTION, AS PER PLAN	11
48							70						70	611	01401	70	FT	6" CONDUIT, TYPE E, AS PER PLAN	12
49					250		89						339	611	04401	339	FT	12" CONDUIT, TYPE B, AS PER PLAN	12
50							36						36	611	05901	36	FT	15" CONDUIT, TYPE B, AS PER PLAN	12
51							75						75	611	07401	75	FT	18" CONDUIT, TYPE B, AS PER PLAN	12
52							180						180	611	08901	180	FT	21" CONDUIT, TYPE B, AS PER PLAN	12

CALCULATED VLE
CHECKED JTP

GENERAL SUMMARY

CUY - OLD ROCKSIDE ROAD

P:\PR57030\Cadd\Sheets\ORR_91563_GG001.dwg 04-Nov-21 2:57 PM

REF NO.	SHEET NUM.												PART.	ITEM	ITEM EXT	GRAND TOTAL	UNIT	DESCRIPTION	SEE SHEET NO.
	10	11	12	15	41	42	43	71					01/BRF/BR						
																		DRAINAGE	
53					3								3	611	98181	3	EACH	CATCH BASIN, NO. 3A, AS PER PLAN (CUYAHOGA COUNTY NO. 3C)	12
54					1								1	611	98391	1	EACH	CATCH BASIN, NO. 7, AS PER PLAN	12
55			1		2								3	611	98471	3	EACH	CATCH BASIN, NO. 2-2B, AS PER PLAN	12
56					3								3	611	98631	3	EACH	CATCH BASIN ADJUSTED TO GRADE, AS PER PLAN	12
57					1								1	611	98631	1	EACH	CATCH BASIN ADJUSTED TO GRADE, AS PER PLAN A	12
58					1								1	611	98631	1	EACH	CATCH BASIN ADJUSTED TO GRADE, AS PER PLAN B	12
59			1										1	611	98635	1	EACH	CATCH BASIN RECONSTRUCTED TO GRADE, AS PER PLAN	12
60					1								1	611	98690	1	EACH	CATCH BASIN, MISC.: TEMPORARY PLATE	12
61			1										1	611	98701	1	EACH	INLET, SIDE DITCH, AS PER PLAN	12
62					2								2	611	99575	2	EACH	MANHOLE, NO. 3, AS PER PLAN (WITH NO. 37 COVER)	12
63					1								1	611	99575	1	EACH	MANHOLE, NO. 3, AS PER PLAN A	13
64					1								1	611	99655	1	EACH	MANHOLE ADJUSTED TO GRADE, AS PER PLAN	12
65			1										1	611	99661	1	EACH	MANHOLE RECONSTRUCTED TO GRADE, AS PER PLAN	12
66		5,000											5,000	SPECIAL	61199820	5,000	LB	MISCELLANEOUS METAL	11
																		PAVEMENT	
67						184							184	254	01001	184	SY	PAVEMENT PLANING, ASPHALT CONCRETE, AS PER PLAN, 1.25"	13
68						1,222							1,222	254	01001	1,222	SY	PAVEMENT PLANING, ASPHALT CONCRETE, AS PER PLAN, 3"	13
69						359							359	302	46001	359	CY	ASPHALT CONCRETE BASE, PG64-22, AS PER PLAN	13
70						682							682	304	20001	682	CY	AGGREGATE BASE, AS PER PLAN	13
71						571							571	407	20000	571	GAL	NON-TRACKING TACK COAT	
72						85							85	441	50101	85	CY	ASPHALT CONCRETE SURFACE COURSE, TYPE 1, (448), PG64-22, AS PER PLAN	13
73						97							97	441	50101	97	CY	ASPHALT CONCRETE SURFACE COURSE, TYPE 1, (448), PG70-22M, AS PER PLAN	13
74						245							245	441	50301	245	CY	ASPHALT CONCRETE INTERMEDIATE COURSE, TYPE 2, (448), PG64-22, AS PER PLAN	13
75				20		12							32	452	12010	32	SY	8" NON-REINFORCED CONCRETE PAVEMENT, CLASS QC 1P	
76						584							584	609	12001	584	FT	COMBINATION CURB AND GUTTER, TYPE 2, AS PER PLAN A	13
77						118							118	609	12001	118	FT	COMBINATION CURB AND GUTTER, TYPE 2, AS PER PLAN B	13
78						47							47	609	18001	47	FT	COMBINATION CURB AND GUTTER, TYPE 3, AS PER PLAN	13
79						29							29	609	24511	29	FT	CURB, TYPE 4-C, AS PER PLAN	13
80						165							165	609	26001	165	FT	CURB, TYPE 6, AS PER PLAN	13
81						192							192	875	10000	192	LB	LONGITUDINAL JOINT ADHESIVE	
																		WATER WORK	
82								1					1	202	75610	1	EACH	VALVE BOX REMOVED	
83								1					1	638	07500	1	EACH	12" GATE VALVE	
84								2					2	638	08620	2	EACH	12" INSERTING VALVE AND VALVE BOX	
85								1					1	638	10300	1	EACH	FIRE HYDRANT EXTENDED AND ADJUSTED TO GRADE	
86								1					1	638	10400	1	EACH	FIRE HYDRANT ADJUSTED TO GRADE	
87								2					2	638	10700	2	EACH	FIRE HYDRANT REMOVED AND DISPOSED OF	
88			3										3	638	10801	3	EACH	VALVE BOX ADJUSTED TO GRADE, AS PER PLAN	12
89								240					240	SPECIAL	63820172	240	FT	12" WATER MAIN DIP CLASS 52 BOLTLESS RESTRAINED JOINTS AND FITTINGS	67
90								2					2	SPECIAL	63820750	2	EACH	6" FIRE HYDRANT FURNISHING AND SETTING, COMPLETE	69
91								2					2	SPECIAL	63820884	2	EACH	CUT AND PLUG EXISTING 12" WATER LINE	68
																		TRAFFIC CONTROL	
92							144.5						144.5	630	03100	144.5	FT	GROUND MOUNTED SUPPORT, NO. 3 POST	
93							42.3						42.3	630	80101	42.3	SF	SIGN, FLAT SHEET, AS PER PLAN	13A
94							8						8	630	84900	8	EACH	REMOVAL OF GROUND MOUNTED SIGN AND DISPOSAL	
95							3						3	630	85100	3	EACH	REMOVAL OF GROUND MOUNTED SIGN AND REERECTION	
96							6						6	630	85200	6	EACH	REMOVAL OF GROUND MOUNTED SIGN AND DELIVERY	
97							1						1	630	85201	1	EACH	REMOVAL OF GROUND MOUNTED SIGN AND DELIVERY, AS PER PLAN	13A
98							18						18	630	86002	18	EACH	REMOVAL OF GROUND MOUNTED POST SUPPORT AND DISPOSAL	
99							1						1	630	89816	1	EACH	REMOVAL OF WOOD POLE AND REERECTION	
100							1						1	630	97700	1	EACH	SIGNING, MISC.: SIGN ADJUSTED	13A
101							0.25						0.25	646	10000	0.25	MILE	EDGE LINE, 4"	
102							0.22						0.22	646	10200	0.22	MILE	CENTER LINE	
103							65						65	646	10400	65	FT	STOP LINE	
104							90						90	646	10500	90	FT	CROSSWALK LINE	
105							1						1	646	20000	1	EACH	RAILROAD SYMBOL MARKING	
106							1,242						1,242	646	20200	1,242	FT	PARKING LOT STALL MARKING	

CALCULATED VLE
CHECKED JTP

GENERAL SUMMARY

CUY - OLD ROCKSIDE ROAD

P:\PR57030\Cadd\Sheets\ORR_91563_GG002.dwg 01-Nov-21 2:14 PM

REF NO.	SHEET NUM. 7	8	9	10	14	15	42	45	84				PART. 01/BRF/BR	ITEM	ITEM EXT	GRAND TOTAL	UNIT	DESCRIPTION	SEE SHEET NO.
107-124																		**RETAINING WALLS**	
																		SEE SHEET 75 FOR RETAINING WALL AND BARRIER MOMENT SLAB ESTIMATED QUANTITIES	75
125-175																		**STRUCTURE OVER 20 FOOT SPAN**	
																		SEE SHEET 104 FOR STRUCTURE 00.42 ESTIMATED QUANTITIES	104
																		MAINTENANCE OF TRAFFIC	
176								2,231					2,231	202	23000	2,231	SY	PAVEMENT REMOVED	
177								95					95	202	35100	95	FT	PIPE REMOVED, 24" AND UNDER	
178								1					1	202	42040	1	EACH	ANCHOR ASSEMBLY REMOVED, TYPE T	
179								1					1	202	47000	1	EACH	BRIDGE TERMINAL ASSEMBLY REMOVED	
180								75					75	202	38000	75	FT	GUARDRAIL REMOVED	
181								2					2	202	58100	2	EACH	CATCH BASIN REMOVED	
182								459					459	203	10000	459	CY	EXCAVATION	
183								3,151					3,151	203	20001	3,151	CY	EMBANKMENT, AS PER PLAN	8
184								288					288	204	30020	288	CY	GRANULAR MATERIAL, TYPE C	
185								362					362	204	51000	362	SY	GEOGRID	
186							2,681						2,681	204	10000	2,681	SY	SUBGRADE COMPACTION	
187							251						251	302	46001	251	CY	ASPHALT CONCRETE BASE, PG64-22, AS PER PLAN	13
188							487						487	304	20001	487	CY	AGGREGATE BASE, AS PER PLAN	13
189							226						226	407	20000	226	GAL	NON-TRACKING TACK COAT	
190						15							15	410	12000	15	CY	TRAFFIC COMPACTED SURFACE, TYPE A OR B	
191							78						78	441	50101	78	CY	ASPHALT CONCRETE SURFACE COURSE, TYPE 1, (448), PG70-22M, AS PER PLAN	13
192							109						109	441	50301	109	CY	ASPHALT CONCRETE INTERMEDIATE COURSE, TYPE 2, (448), AS PER PLAN, PG64-22	13
193									LS				LS	502	11101	LS	-	STRUCTURE FOR MAINTAINING TRAFFIC, AS PER PLAN	86
194								75					75	606	15050	75	FT	GUARDRAIL, TYPE MGS	
195								1					1	606	26500	1	EACH	ANCHOR ASSEMBLY, TYPE T	
196								1					1	606	35000	1	EACH	BRIDGE TERMINAL ASSEMBLY, TYPE 1	
197								95					95	611	04401	95	FT	12" CONDUIT, TYPE B, AS PER PLAN	12
198								2					2	611	98471	2	EACH	CATCH BASIN, NO. 2-2B, AS PER PLAN	12
199						40							40	614	11110	40	HOUR	LAW ENFORCEMENT OFFICER WITH PATROL CAR FOR ASSISTANCE	
200								7					7	614	12380	7	EACH	WORK ZONE IMPACT ATTENUATOR, 24" WIDE HAZARDS, (UNIDIRECTIONAL)	
201						20							20	614	13000	20	CY	ASPHALT CONCRETE FOR MAINTAINING TRAFFIC	
202						30							30	614	13310	30	EACH	BARRIER REFLECTOR, TYPE 1, BIDIRECTIONAL	
203						6							6	614	13314	6	EACH	BARRIER REFLECTOR, TYPE 3, BIDIRECTIONAL	
204						30							30	614	13360	30	EACH	OBJECT MARKER, TWO WAY	
205					0.60								0.60	614	21100	0.60	MILE	WORK ZONE CENTER LINE, CLASS I, 642 PAINT	
206					0.22								0.22	614	21550	0.22	MILE	WORK ZONE CENTER LINE, CLASS III, 642 PAINT	
207					0.40								0.40	614	22100	0.40	MILE	WORK ZONE EDGE LINE, CLASS I, 4", 642 PAINT	
208					0.24								0.24	614	22350	0.24	MILE	WORK ZONE EDGE LINE, CLASS III, 4", 642 PAINT	
209					80								80	614	24200	80	FT	WORK ZONE DOTTED LINE, CLASS I, 4", 642 PAINT	
210					100								100	614	26200	100	FT	WORK ZONE STOP LINE, CLASS I, 642 PAINT	
211					65								65	614	26610	65	FT	WORK ZONE STOP LINE, CLASS III, 642 PAINT	
212					1								1	614	32200	1	EACH	WORK ZONE RAILROAD SYMBOL MARKING, CLASS I, 642 PAINT	
213	12												12	616	10000	12	MGAL	WATER	
214	1.2												1.2	616	20000	1.2	TON	CALCIUM CHLORIDE	
215								561					561	622	41100	561	FT	PORTABLE BARRIER, UNANCHORED	
216				1,638									1,638	659	10001	1,638	SY	SEEDING AND MULCHING, AS PER PLAN	10
217				90									90	659	14000	90	SY	REPAIR SEEDING AND MULCHING	
218				11									11	659	35000	11	MGAL	WATER	
219				15.5									15.5	659	40000	15.5	MSF	MOWING	
220								1,595					1,595	670	00520	1,595	SY	SLOPE EROSION PROTECTION MAT, TYPE B	
																		INCIDENTALS	
221					LS								LS	614	11001	LS	-	MAINTAINING TRAFFIC, AS PER PLAN	14
222	20												20	619	16021	20	MNTH	FIELD OFFICE, TYPE C, AS PER PLAN	7
223			LS										LS	623	10001	LS	-	CONSTRUCTION LAYOUT STAKES AND SURVEYING, AS PER PLAN	9
224													LS	624	10000	LS	-	MOBILIZATION	
225													LS	SPECIAL	69098400	LS	-	PROJECT DVD RECORDING (SEE PROPOSAL NOTE)	
226													LS	SPECIAL	10810000	LS	-	CPM PROGRESS SCHEDULE (SEE PROPOSAL NOTE)	

CALCULATED VLE
CHECKED JTP

GENERAL SUMMARY

CUY - OLD ROCKSIDE ROAD

P:\PR57030\Cadd\Sheets\ORR_91563_GG003.dwg 01-Nov-21 2:14 PM

REF NO.	SHEET NO.	STATION TO STATION					SPECIAL	201	201	201	202	202	202	202	202	202	202	202	606	606	606	606	608				
							STUMP REMOVED, 4"-12"	STUMP REMOVED, 18"	STUMP REMOVED, 30"	STUMP REMOVED, 48"	PAVEMENT REMOVED	WALK REMOVED	CURB REMOVED	CURB AND GUTTER REMOVED	GUARDRAIL REMOVED	FENCE REMOVED	REMOVAL MISC.: FLAG POLE REMOVED	REMOVAL MISC.: LIGHT REMOVED	GUARDRAIL, TYPE MGS	ANCHOR ASSEMBLY, TYPE E	ANCHOR ASSEMBLY, TYPE T	BRIDGE TERMINAL ASSEMBLY, TYPE I	CURB RAMP				
							EACH	EACH	EACH	EACH	SY	SF	FT	FT	FT	FT	EACH	EACH	FT	EACH	EACH	EACH	SF				
	22/47	29+37	LT	TO					1																		
	22/47	29+72	LT				1																				
	22/47	29+74	LT					1																			
	22/47	28+75	LT				1																				
	22/47	30+27	RT				1																				
	23/47	30+62	RT							1																	
	23/47	30+65	RT					1																			
	23/47	30+71	LT					1																			
	23/47	30+75	LT					1																			
	23/47	30+81	LT				1																				
	23/47	30+90	LT					1																			
	23/50	31+13	RT						1																		
	23/50	31+24	RT				1																				
	23/50	32+55	LT					1																			
	23/50	32+59	LT					1																			
	23/50	32+66	RT					1																			
	23/50	32+89	RT					1																			
	23/50	32+94	RT					1																			
	23/50	33+03	LT				1																				
	23/50	33+15	RT				1																				
	23/50	33+50	LT				1																				
	23/50	33+64	RT				1																				
	23/50	33+95	LT				1																				
	23/50	34+13	RT					1																			
	23/50	34+44	LT				1																				
	23/50	34+63	RT					1																			
	24/50	35+04	LT					1																			
	24/50	35+10	LT				1																				
	24/50	35+11	LT				1																				
	24/50	35+20	RT					1																			
R-1	22/47	28+12.00			30+37.00						600																
R-2	23/50	33+38.00			34+65.00						368																
R-3	22/47	7909 ORR			27+26.96	LT					197																
R-4	22/47	7809 ORR			28+79.30	RT					32																
R-5	22/47	7919 ORR			28+94.63	LT					499																
R-6	23/50	6150 W. CANAL			34+79.67	LT					1282																
R-7	23/50	THORNBURG STA.			35+60.52	RT					244																
R-8	22/47	1+15.86			3+30						508																
R-9	23/50	34+75.00	RT									56															
R-10	23/50	33+38.00	LT		202+19.20	RT								260													
R-11	23/50	33+38.00	RT		34+65.00	RT								127													
R-12	23/50	THORNBURG STA.											147														
R-13	23/47	30+55.61	LT		31+02.87	LT									48												
R-14	23/47	30+43.46	RT		31+02.71	RT									60												
R-15	23/50	32+61.72	LT		33+73.42	RT									112												
R-16	23/50	32+63.00	RT		32+98.68	RT									36												
R-17	22/47	30+29	LT														1										
R-18	22/47	30+30	LT															1									
R-19	22/47	28+43	LT		29+27	LT										124											
GR-1	47	30+07.00	RT		30+52.50	RT													25		1	1					
GR-2	50	33+36.00	LT		34+17.52	LT													12.5	1		1					
CR-1	47	30+10.00	RT		TYPE B3																		100				
CR-2	50	35+40.00	RT		TYPE B3																		110				
TOTALS CARRIED TO GENERAL SUMMARY							13	14	2	1	3730	56	147	387	256	124	1	1	37.5	1	1	2	210				

CALCULATED VLE
CHECKED JTP

ROADWAY SUBSUMMARY

CUY - OLD ROCKSIDE ROAD

P:\PR57030\Cadd\Sheets\ORR_91563_GS001.dwg 14-Sep-21 4:30 PM

REF NO.	SHEET NO.	STATION TO STATION			202 PIPE REMOVED, 24" AND UNDER	202 MANHOLE REMOVED	202 CATCH BASIN REMOVED	611 CONCRETE MASONRY	611 6" CONDUIT, TYPE E, AS PER PLAN	611 12" CONDUIT, TYPE B, AS PER PLAN	611 15" CONDUIT, TYPE B, AS PER PLAN	611 18" CONDUIT, TYPE B, AS PER PLAN	611 21" CONDUIT, TYPE B, AS PER PLAN	611 CATCH BASIN, NO. 3A, AS PER PLAN (CUYAHOGA COUNTY NO. 3C)	611 CATCH BASIN, NO. 7, AS PER PLAN	611 CATCH BASIN, NO. 2-2B, AS PER PLAN	611 CATCH BASIN ADJUSTED TO GRADE, AS PER PLAN	611 CATCH BASIN ADJUSTED TO GRADE, AS PER PLAN A	612 CATCH BASIN ADJUSTED TO GRADE, AS PER PLAN B	611 CATCH BASIN, MISC.: TEMPORARY PLATE	611 MANHOLE, NO. 3, AS PER PLAN (WITH NO.37 COVER)	611 MANHOLE, NO. 3, AS PER PLAN A	611 MANHOLE ADJUSTED TO GRADE, AS PER PLAN	
			TO		FT	EA	EA	CY	FT	FT	FT	FT	FT	EA	EA	EA	EA	EA	EA	EA	EA	EA	EA	EA	
RD-1	22/47	28+50.00, 19.57' LT		29+24.97, 18.41' LT	75		1																		
RD-2	22/47	29+25.97, 14.22' RT		29+24.97, 18.41' LT	32		1																		
RD-3	22/47	29+24.97, 18.41' LT		29+72.39, 20.17' LT	48		1																		
RD-4	22/47	29+72.39, 20.17' LT		31+17.73, 21.96' LT	146		1																		
D1	22/47	28+50.00, 18.00' RT		28+50.00, 19.57' LT							36					1									
D2	22/47	28+50.00, 19.57' LT		29+25.00, 23.24' LT								75				1									
D3	22/47	29+25.00, 23.24' LT		29+80.00, 26.90' LT									95									1			
D4	22/47	30+20.00, 26.50' LT		31+05.30, 26.50' LT									85									1			
D5	22/47	29+25.00, 21.36' RT		29+25.00, 15.00' RT						7					1										
D6	22/47	29+25.00, 15.00' RT		29+25.00, 15.00' LT						30				1											
D7	22/47	29+25.00, 15.00' LT		29+25.00, 23.24' LT						9				1											
D8	22/47	30+32.00, 15.00' RT		29+80.00, 26.90' LT						43				1											
D9	22/47	27+74.33, 18.90' LT															1				1				
D10	24/50	35+41.52, 31.19' LT																	1						
D11	24/50	35+97.29, 38.99' LT															1								
D12	24/50	35+83.56, 16.28' RT															1								
D13	24/50	35+87.37, 20.36' RT																1							
HW-1	23/50	31+05.30, 26.50' LT						0.4																	
SA-1	22/47	27+94.23, 13.83' LT																						1	
SA-2	22/47	29+82.82, 16.43' LT				1																	1		
SA-3	22/47	29+75 RT			70				70																
TOTALS CARRIED TO GENERAL SUMMARY					371	1	4	0.4	70	89	36	75	180	3	1	2	3	1	1	1	2	1	1		

CALCULATED VLE
CHECKED JTP

DRAINAGE AND SANITARY SUBSUMMARY

CUY - OLD ROCKSIDE ROAD

41
157

P:\PR57030\Cadd\Sheets\ORR_91563_GS002.dwg 14-Sep-21 4:31 PM

FINAL PAVEMENT

STATION RANGE			TYPICAL SECTION	SIDE	DISTANCE (D)	AVERAGE WIDTH (W)	SURFACE AREA (A) A=DxW/9	CADD GENERATED AREA	204 SUBGRADE COMPACTION	254 PAVEMENT PLANING, ASPHALT CONCRETE, AS PER PLAN, 1.25"	254 PAVEMENT PLANING, ASPHALT CONCRETE, AS PER PLAN, 3"	302 ASPHALT CONCRETE BASE, PG64-22, AS PER PLAN	304 AGGREGATE BASE, AS PER PLAN	407 NON-TRACKING TACK COAT	441 ASPHALT CONCRETE SURFACE COURSE, TYPE 1, (448), PG64-22, AS PER PLAN	441 ASPHALT CONCRETE SURFACE COURSE, TYPE 1, (448), PGTO-22M, AS PER PLAN	441 ASPHALT CONCRETE INTERMEDIATE COURSE, TYPE 2, (448), PG64-22, AS PER PLAN	452 8" NON-REINFORCED CONCRETE PAVEMENT, CLASS QC IP	605 6" BASE PIPE UNDERDRAINS WITH GEOTEXTILE FABRIC, AS PER PLAN	608 4" CONCRETE WALK, AS PER PLAN	609 COMBINATION CURB AND GUTTER, TYPE 2, AS PER PLAN A	609 COMBINATION CURB AND GUTTER, TYPE 2, AS PER PLAN B	609 COMBINATION CURB AND GUTTER, TYPE 3, AS PER PLAN	609 CURB, TYPE 4-C, AS PER PLAN	609 CURB, TYPE 6, AS PER PLAN	875 LONGITUDINAL JOINT ADHESIVE
					FT	FT	SY	SY	SY	SY	SY	CY	CY	GAL	CY	CY	CY	SY	FT	SF	FT	FT	FT	FT	FT	LB
26+20.00	TO	28+12.00			192.00	24.00	512.00				512.00			71.68		17.78	24.89									38.40
28+12.00		28+57.00			45.00	27.00	135.00		148.33			38.43	23.89	13.50		4.69	6.56		90.00							9.00
28+57.00		30+08.34			151.34	26.00	437.20		487.65			126.90	80.34	44.28		15.18	21.25		302.68		302.68					30.30
30+08.34		30+37.00			28.66	26.00	82.80		92.35			23.00	13.80	8.28		2.87	4.02		57.32	186.29	57.32			28.66		5.80
30+37.00		30+64.00			27.00	30.00	90.00		99.00				15.50													
33+11.00		33+38.00			27.00	30.00	90.00		99.00				15.50													
33+38.00		34+05.17			67.17	26.00	194.05		216.44			53.90	32.34	19.40		6.74	9.43		134.34		134.34					13.50
34+05.17		34+65.00			59.83	26.00	172.84		192.79			48.01	28.81	17.28		6.00	8.40		132.57	388.90	89.66	30.00				12.00
34+65.00		36+02.81						710.00			710.00	3.29		99.40		24.65	34.51		134.22	520.07		87.78	46.44			40.00
34+90.00		202+19.20						25.00	25.00			6.94	4.17	2.50		0.87	1.22									
35+78.40		35+91.49						5.63												50.66						
7909 ORR		27+26.96	LT					197.00	197.00				32.83	19.70	6.84		9.58									
7809 ORR		28+79.30	RT					29.00	29.00				4.83	2.90	1.01		1.41									
7919 ORR		28+94.63	LT					499.00	499.00				83.17	49.90	17.33		24.26									
6150 W. Canal		34+75.67	LT					1301.00	1301.00				216.83	130.10	45.17		63.24									
Thornburg Sta.		35+60.52	RT					232.00	232.00				38.67	23.20	8.06		11.28	11.22							164.85	
								184.00		184.00				16.56	6.39											
CVSR Drive																										
1+15.86		1+48.52			32.66			104.00	104.00			11.82	18.34	10.40		3.61	5.06									6.60
1+48.52		3+30.00			181.48	20.00	403.29		463.78			46.30	72.82	41.00		14.00	19.60									36.30
								SUBTOTALS	4186.34	184.00	1222.00	358.59	681.83	570.09	84.79	96.40	244.72	11.22	851.13	1145.91	584.00	117.78	46.44	28.66	164.85	191.90
								TOTALS CARRIED TO GENERAL SUMMARY	4187	184	1222	359	682	571	85	97	245	12	852	1146	584	118	47	29	165	192

TEMPORARY PAVEMENT

STATION RANGE			TYPICAL SECTION	SIDE	DISTANCE (D)	AVERAGE WIDTH (W)	SURFACE AREA (A) A=DxW/9	CADD GENERATED AREA	204 SUBGRADE COMPACTION	302 ASPHALT CONCRETE BASE, PG64-22, AS PER PLAN	304 AGGREGATE BASE, AS PER PLAN	407 NON-TRACKING TACK COAT	441 ASPHALT CONCRETE SURFACE COURSE, TYPE 1, (448), PGTO-22M, AS PER PAN	441 ASPHALT CONCRETE INTERMEDIATE COURSE, TYPE 2, (448), PG64-22, AS PER PLAN
					FT	FT	SY	SY	SY	CY	CY	GAL	CY	CY
126+22.89	TO	127+83.04			160.15			217.00	243.69	34.06	47.04	22.00	7.53	10.55
127+83.04		130+60.71			277.67	24.00	740.45		833.01	116.27	161.12	75.07	25.71	35.99
130+60.71		130+85.71			25.00	26.00	72.22		80.56		13.81			
132+89.86		133+14.86			25.00	26.00	72.22		80.56		13.81			
133+14.85		135+05.65			190.80	24.00	508.80		572.40	79.89	110.71	51.59	17.67	24.73
135+05.65		135+59.57			53.92			130.00	138.99	20.17	25.33	13.10	4.51	6.32
7909 ORR		27+26.96	LT					90.00	106.67		16.54	9.00	3.13	4.38
7919 ORR		28+94.63	LT					96.00	114.33		17.70	9.60	3.33	4.67
CVSR Drive														
0+65.23		1+24.42			59.19			223.00	252.53		39.90	22.30	7.74	10.84
1+24.42		2+25.38			100.96	20.00	224.36		258.01		40.51	22.81	7.79	10.91
								SUBTOTALS	2680.74	250.38	486.47	225.47	77.42	108.38
								TOTALS CARRIED TO GENERAL SUMMARY	2681	251	487	226	78	109

CALCULATED VLE
CHECKED JTP

PAVEMENT SUBSUMMARY

CUY - OLD ROCKSIDE ROAD

P:\PR57030\Cadd\Sheets\ORR_91563_GS003.dwg 02-Sep-21 6:23 PM

SIGNING SUBSUMMARY

SHEET NO.	REFERENCE NO.	LOCATION	STATION	SIDE	CODE	SIZE (INCHES)	630 GROUND MOUNTED SUPPORT, NO. 3 POST (FT.)	630 SIGN, FLAT SHEET, AS PER PLAN (SQ. FT.)	630 REMOVAL OF GROUND MOUNTED SIGN AND DISPOSAL (EACH)	630 REMOVAL OF GROUND MOUNTED SIGN AND REERECTION (EACH)	630 REMOVAL OF GROUND MOUNTED SIGN AND DELIVERY (EACH)	630 REMOVAL OF GROUND MOUNTED SIGN AND DELIVERY, AS PER PLAN (EACH)	630 REMOVAL OF GROUND MOUNTED POST SUPORT AND DISPOSAL (EACH)	630 REMOVAL OF WOOD POLE AND REERECTION (EACH)	630 SIGNING, MISC.: SIGN ADJUSTED (EACH)					
64	S-1	OLD ROCKSIDE ROAD	28+40	LT	W10-1-36	36 x 36	13.5	9.00	1				1							
65	S-2	OLD ROCKSIDE ROAD	29+70	RT	CVSR SIGN										1					
65	S-3	CVSR DRIVE	1+47	LT	R1-1-24	24 x 24	12.5	4.00	1				1							
65	S-4	OLD ROCKSIDE ROAD	30+39	LT	CVSR SIGN		25.00			1			2							
65	S-5	OLD ROCKSIDE ROAD	30+51	LT	OM-3L-36	12 x 36	10.5	3.00	1				1							
65	S-6	OLD ROCKSIDE ROAD	30+51	RT	OM-3R-36	12 x 36	10.5	3.00	1				1							
					SLM-1C	12 x 12		1.00												
65	S-7	OLD ROCKSIDE ROAD	33+37	LT	OM-3R-36	12 x 36	10.5	3.00	1				1							
					SLM-1C	12 x 12		1.00												
65	S-8	OLD ROCKSIDE ROAD	33+37	RT	OM-3L-36	12 x 36	10.5	3.00	1				1							
65	S-9	OLD ROCKSIDE ROAD	33+19	RT	GUEST PARKING						1		1							
65	S-10	OLD ROCKSIDE ROAD	33+69	RT	GUEST PARKING						1		1							
66	S-11	OLD ROCKSIDE ROAD	34+20	RT	GUEST PARKING						1		1							
66	S-12	OLD ROCKSIDE ROAD	34+47	RT	GUEST PARKING						1		1							
66	S-13	OLD ROCKSIDE ROAD	35+16	RT	W11-15-36	36 x 36	13.5	9.00	1				1							
66	S-14	OLD ROCKSIDE ROAD	34+83	RT	GUEST PARKING						1		1							
66	S-15	OLD ROCKSIDE ROAD	35+03	RT	GUEST PARKING						1		1							
66	S-16	OLD ROCKSIDE ROAD	34+98	LT	CVSR SIGN	72 x 22	25.0			1			2							
66	S-17	OLD ROCKSIDE ROAD	35+43	LT	STREET NAME					1				1						
66	S-18	W. CANAL RD.	202+39	RT	R1-1-30	30 x 30	13	6.25	1				1							
66	S-19	OLD ROCKSIDE ROAD	35+82	RT	THORNBURG STA							1								
TOTALS CARRIED TO GENERAL SUMMARY							144.5	42.3	8	3	6	1	18	1	1					

PAVEMENT MARKING SUBSUMMARY

SHEET NO.	REFERENCE NO.	LOCATION	STATION FROM	STATION TO	SIDE	646 EDGE LINE, 4" (MILE)	646 CENTER LINE (MILE)	646 STOP LINE (FT)	646 CROSSWALK LINE (FT)	646 RAILROAD SYMBOL MARKING (EACH)	646 PARKING LOT STALL MARKING (FT)									
64-66	CL-1	OLD ROCKSIDE ROAD	26+05	35+32	℄		0.18													
64	SL-1	OLD ROCKSIDE ROAD	26+05		LT			12												
64	EL-1	OLD ROCKSIDE ROAD	26+05	28+57	LT	0.05														
64	EL-2	OLD ROCKSIDE ROAD	26+05	28+57	RT	0.05														
64	RR-1	OLD ROCKSIDE ROAD	27+91	28+42	LT					1										
65	SL-2	CVSR DRIVE	1+47		LT			10												
65	EL-3	OLD ROCKSIDE ROAD	30+39	34+90	LT	0.09														
65	EL-4	OLD ROCKSIDE ROAD	30+39	33+36	RT	0.06														
66	CW-1	OLD ROCKSIDE ROAD	35+97		LT/RT				50											
66	CW-2	OLD ROCKSIDE ROAD	36+09		LT/RT				40											
66	CL-3	OLD ROCKSIDE ROAD	36+09	37+59	℄		0.03													
66	SL-3	OLD ROCKSIDE ROAD	37+59		RT			28												
66	SL-4	W. CANAL ROAD	202+39		RT			15												
66	CL-2	W. CANAL ROAD	202+19	202+39	℄		0.01													
63		E-CHECK PARKING LOT									756									
63		THORNBURG STATION									486									
TOTALS CARRIED TO GENERAL SUMMARY						0.25	0.22	65	90	1	1242									

CALCULATED VLE CHECKED JTP

SIGNING AND PAVEMENT MARKING SUBSUMMARY

CUY - OLD ROCKSIDE ROAD

P:\PR57030\Cadd\Sheets\ORR_91563_GS004.dwg 02-Sep-21 6:23 PM

REF NO.	SHEET NO.	STATION TO STATION			203 EXCAVATION CY	203 EMBANKMENT, AS PER PLAN CY	203 GRANULAR MATERIAL, TYPE C CY	204 GEOGRID SY	SPECIAL GEOTEXTILE FABRIC SY	670 SLOPE EROSION PROTECTION MAT, TYPE B SY															
	52	26+00.00	TO	27+00.00																					
	53	27+50.00		28+50.00	29	9				29															
	54	29+00.00		30+00.00	1057	90	255	607	607	131															
	55	30+39.00		33+50.00	1399	85	149	229	229	127															
	56	34+00.00		35+00.00	434	88				110															
	57	1+25.00		1+75.00	110	42	22	20	20	78															
	58	2+00.00		2+50.00	41	2				60															
	59	2+75.00		3+25.00																					
	60	3+30.00		3+50.00																					
TOTALS CARRIED TO GENERAL SUMMARY					3070	316	426	856	856	535															

CALCULATED VLE
CHECKED JTP

EARTHWORK SUBSUMMARY

CUY - OLD ROCKSIDE ROAD

P:\PR57030\Cadd\Sheets\ORR_91563_GS005.dwg 02-Sep-21 6:23 PM

REF NO.	SHEET NO.	STATION TO STATION			202 PAVEMENT REMOVED SY	202 GUARDRAIL REMOVED FT	202 ANCHOR ASSEMBLY REMOVED, TYPE T EACH	202 BRIDGE TERMINAL ASSEMBLY REMOVED EACH	203 EXCAVATION CY	203 EMBANKMENT, AS PER PLAN CY	203 GRANULAR MATERIAL, TYPE C CY	204 GEOGRID SY	670 SLOPE EROSION PROTECTION MAT, TYPE B SY	202 PIPE REMOVED, 24" AND UNDER FT	202 CATCH BASIN REMOVED EACH	611 12" CONDUIT, TYPE B, AS PER PLAN FT	611 CATCH BASIN, NO. 2-2B, AS PER PLAN EACH	606 GUARDRAIL, TYPE MGS FT	606 ANCHOR ASSEMBLY, TYPE T EACH	606 BRIDGE TERMINAL ASSEMBLY, TYPE 1 EACH	614 WORK ZONE IMPACT ATTENUATOR, 24" WIDE HAZARDS, (UNIDIRECTIONAL) EACH	622 PORTABLE BARRIER, UNANCHORED FT			
			TO																							
TR-1	22	126+22.89		130+60.71	958																					
TR-2	23	133+14.85		135+59.57	639																					
TR-3	22	7909 ORR		27+26.96 LT	90																					
TR-4	22	7919 ORR		28+94.63 LT	96																					
TR-5	22	0+65.23		2+25.38	448																					
	25	126+22.89		127+50.00					65																	
	26	128+00.00		129+50.00					95	517			306													
	27	130+00.00		130+60.71					43	1548			403													
	28	133+14.86		134+00.00					26	471			266													
	29	134+50.00		135+50.00					218	59			209													
	30	0+75.00		1+25.00						359	119	142	145													
	31	1+50.00		2+00.00						151	169	220	135													
	32	2+25.00		2+75.00					1	41			102													
	33	3+00.00		3+30.00					11	5			29													
TD1	22	128+60.00, 15.34' RT													1		1									
TD2	22	128+83.42, 22.41' LT		129+35.22, 25.32' LT										52		52										
TD3	23	134+00.00, 20.00' RT		134+00.00, 22.90' LT										43	1	43	1									
PB-1	22	129+32.97 LT		130+87.30 LT																			1	147		
PB-2	22	85+56.00 RT		1+61.59 RT																			2	35		
GR-T1	22	1+62.20 LT		130+87.30 RT		75	1	1										75	1	1						
PB-3	23	132+88.23 LT		134+50.00 LT																			1	152		
PB-4	23	132+88.23 RT		133+75.11 RT																			1	77		
PB-5	23	33+00.00 RT		34+40.00 RT																			2	150		
TOTALS CARRIED TO GENERAL SUMMARY					2231	75	1	1	459	3151	288	362	1595	95	2	95	2	75	1	1	7	561				

CALCULATED VLE CHECKED JTP

MAINTENANCE OF TRAFFIC SUBSUMMARY

CUY - OLD ROCKSIDE ROAD

P:\PR57030\Cadd\Sheets\ORR_91563_GS006.dwg 02-Sep-21 6:24 PM

PROJECT DATA					
TOTAL AREA (RIGHT OF WAY)	1.34	Ac.	RUNOFF COEFFICIENT FOR PRE-CONSTRUCTION SITE		0.58
PROJECT EARTH DISTURBED AREA	0.75	Ac.	RUNOFF COEFFICIENT FOR POST CONSTRUCTION SITE		0.64
ESTIMATED CONTRACTOR EARTH DISTURBED AREA	1.04	Ac.	POST CONSTRUCTION BMP: NONE REQUIRED		
NOTICE OF INTENT EARTH DISTURBED AREA	1.79	Ac.			
IMPERVIOUS (PAVED) AREA FOR PRE-CONSTRUCTION SITE	0.62	Ac.	IMMEDIATE RECEIVING WATERS	CUYAHOGA RIVER	
IMPERVIOUS (PAVED) AREA FOR POST CONSTRUCTION SITE	0.75	Ac.	SUBSEQUENT RECEIVING WATER	LAKE ERIE	

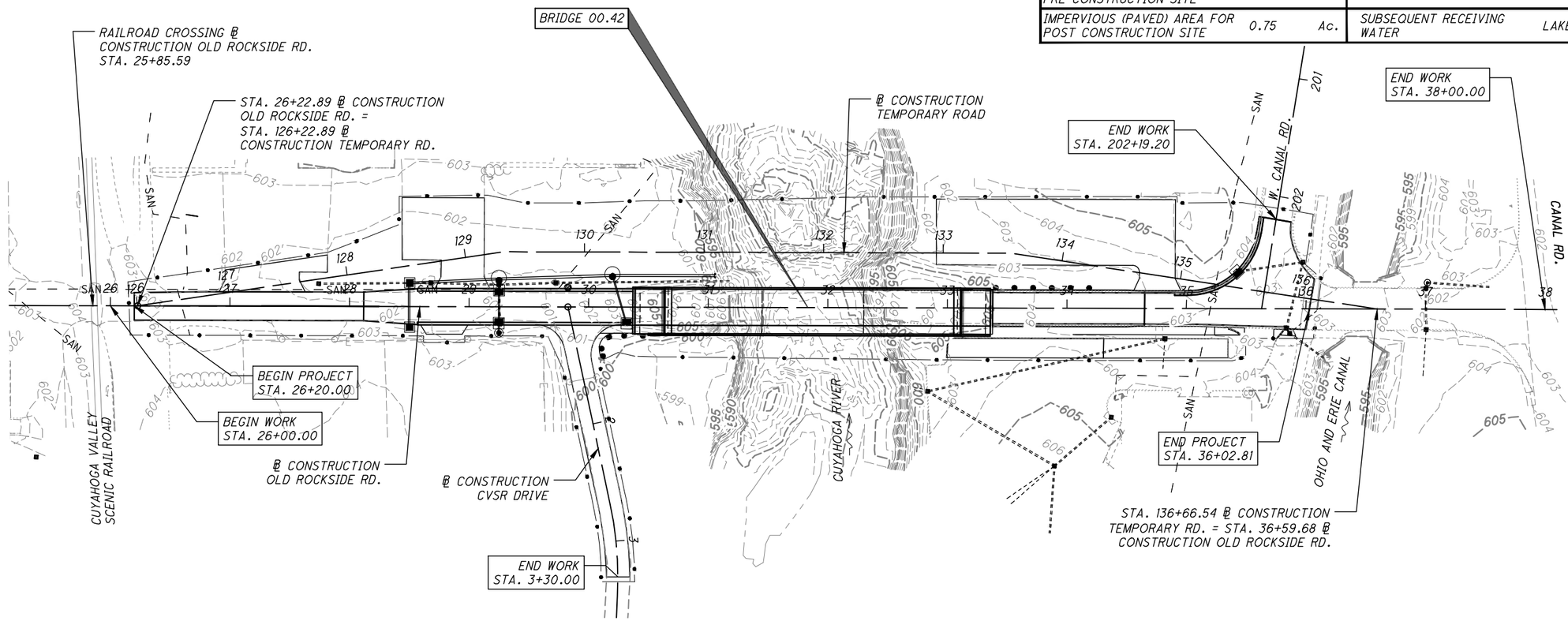

BMP TYPE	LATITUDE/LONGITUDE				BMP WIDTH	EDA TREATMENT CREDIT
	BEGIN		END		(FEET)	(ACRES)
NONE REQUIRED						
				TREATMENT PROVIDED		
				TREATMENT REQUIRED *		

* CALCULATED PER L&D VOL. 2, SEC. 1115.7

USGS MAP:

LONGITUDE: 81°37'45" W
LATITUDE: 41°23'41" N

* LONGITUDE AND LATITUDE TO APPROX. CENTER OF PROJECT

LEGEND

- CATCH BASIN, CB-3
- CATCH BASIN, CB-2.2
- MANHOLE
- CONSTRUCTION LIMITS

PROJECT DESCRIPTION

REPLACEMENT OF THE OLD ROCKSIDE ROAD BRIDGE OVER THE CUYAHOGA RIVER. INCLUDES BRIDGE, ROAD, RECONSTRUCTION OF THE APPROACHES AND CONSTRUCTION OF A TEMPORARY BRIDGE .

HORIZONTAL SCALE IN FEET
0 25 50 100

CALCULATED RMP
CHECKED JTP

PROJECT SITE PLAN

CUY - OLD ROCKSIDE ROAD

P:\PR57030\Cadd\Sheets\ORR_91563_DE001.dwg 02-Sep-21 6:25 PM

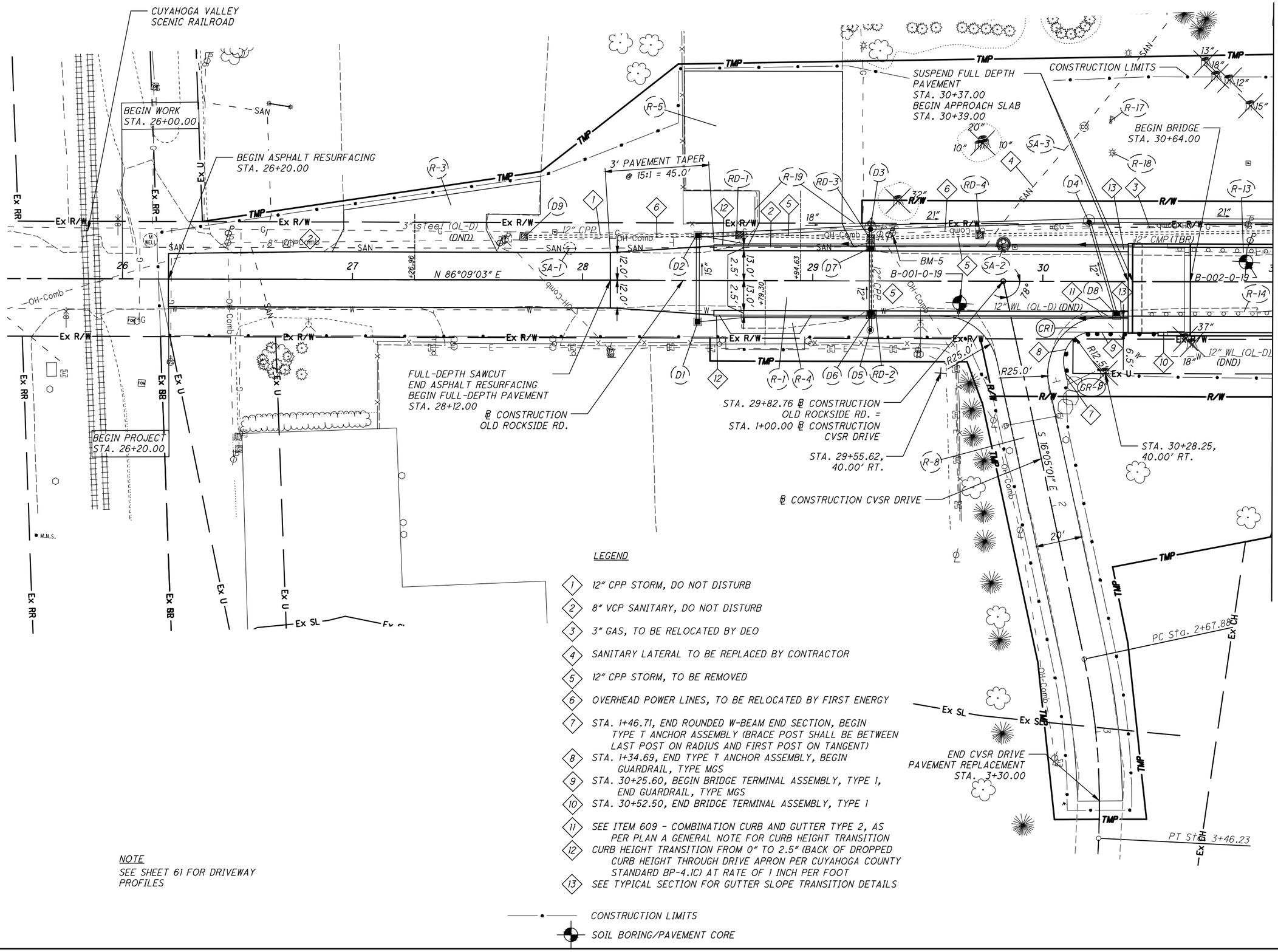

NOTE

SEE SHEET 61 FOR DRIVEWAY PROFILES

LEGEND

1. 12" CPP STORM, DO NOT DISTURB
2. 8" VCP SANITARY, DO NOT DISTURB
3. 3" GAS, TO BE RELOCATED BY DEO
4. SANITARY LATERAL TO BE REPLACED BY CONTRACTOR
5. 12" CPP STORM, TO BE REMOVED
6. OVERHEAD POWER LINES, TO BE RELOCATED BY FIRST ENERGY
7. STA. 1+46.71, END ROUNDED W-BEAM END SECTION, BEGIN TYPE T ANCHOR ASSEMBLY (BRACE POST SHALL BE BETWEEN LAST POST ON RADIUS AND FIRST POST ON TANGENT)
8. STA. 1+34.69, END TYPE T ANCHOR ASSEMBLY, BEGIN GUARDRAIL, TYPE MGS
9. STA. 30+25.60, BEGIN BRIDGE TERMINAL ASSEMBLY, TYPE 1, END GUARDRAIL, TYPE MGS
10. STA. 30+52.50, END BRIDGE TERMINAL ASSEMBLY, TYPE 1
11. SEE ITEM 609 - COMBINATION CURB AND GUTTER TYPE 2, AS PER PLAN A GENERAL NOTE FOR CURB HEIGHT TRANSITION
12. CURB HEIGHT TRANSITION FROM 0" TO 2.5" (BACK OF DROPPED CURB HEIGHT THROUGH DRIVE APRON PER CUYAHOGA COUNTY STANDARD BP-4.1C) AT RATE OF 1 INCH PER FOOT
13. SEE TYPICAL SECTION FOR GUTTER SLOPE TRANSITION DETAILS

CONSTRUCTION LIMITS

SOIL BORING/PAVEMENT CORE

HORIZONTAL SCALE IN FEET 0 10 20 40

CALCULATED VLE CHECKED JTP

PLAN - OLD ROCKSIDE ROAD STA. 25+50 TO STA. 31+00

CUY - OLD ROCKSIDE ROAD

P:\PR57030\Cadd\Sheets\ORR_91563_GP001.dwg 02-Sep-21 6:26 PM

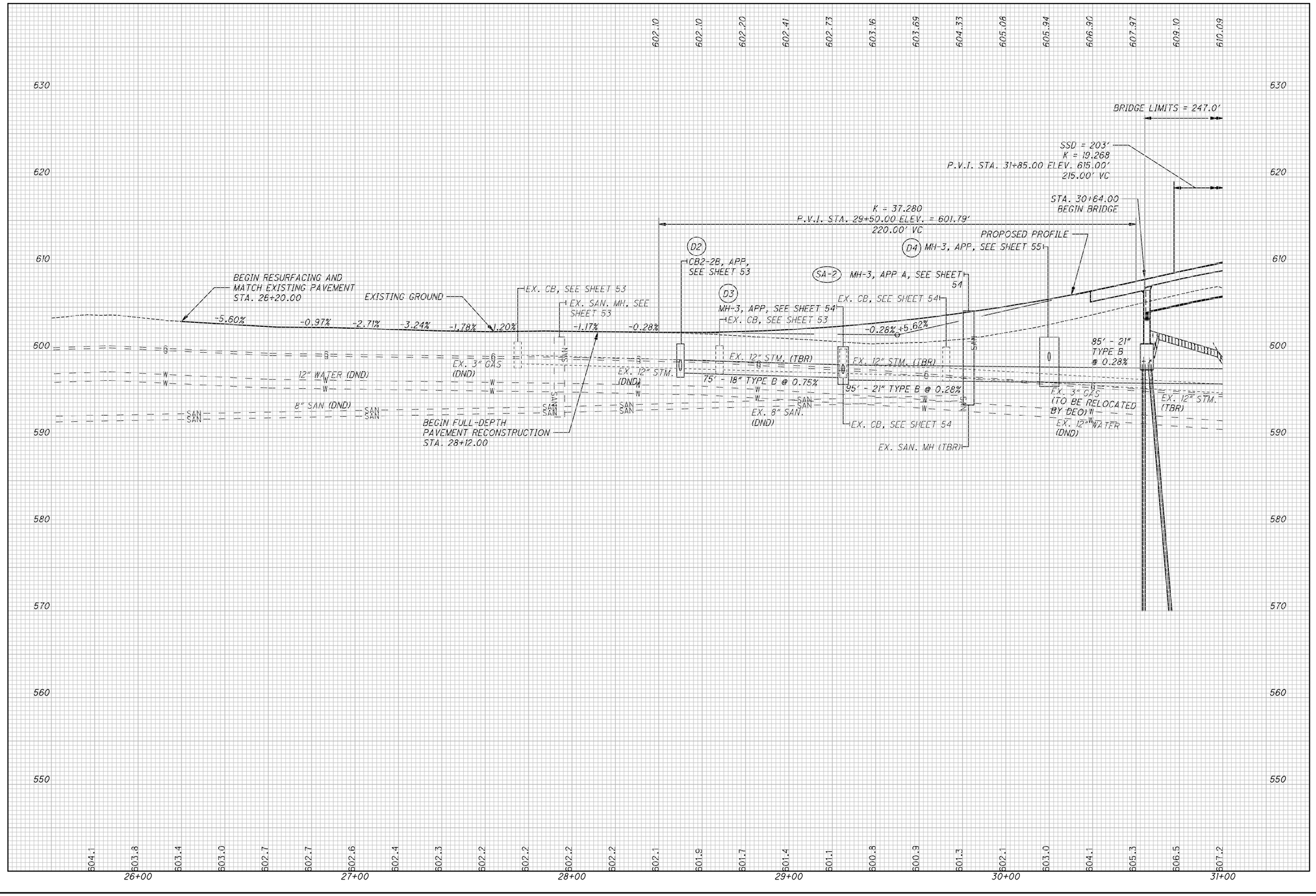

P:\PR57030\Cadd\Sheets\ORR_91563_GF001.dwg 02-Sep-21 6:26 PM

CALCULATED JMS
CHECKED JTP

PROFILE - OLD ROCKSIDE ROAD
STA. 25+50 TO STA. 31+00

CUY - OLD ROCKSIDE ROAD

P:\PR57030\Cadd\Sheets\ORR_91563_GF003.dwg 02-Sep-21 6:27 PM

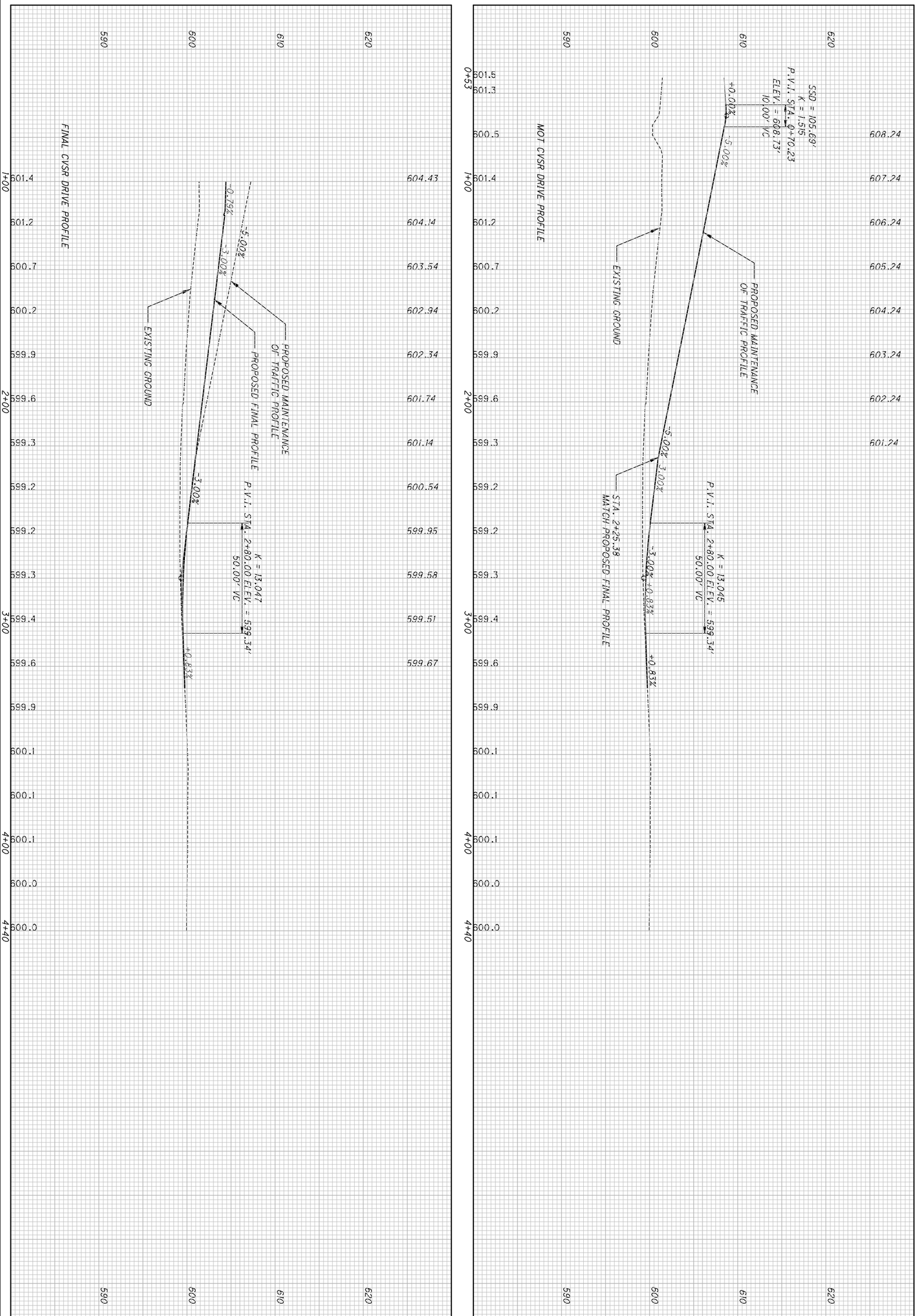

49 / 157	**CUY - OLD ROCKSIDE ROAD**	**PROFILE - MOT AND FINAL CVSR DRIVE STA. 0+52.95 TO STA. 4+40**	CALCULATED VLE / CHECKED JTP

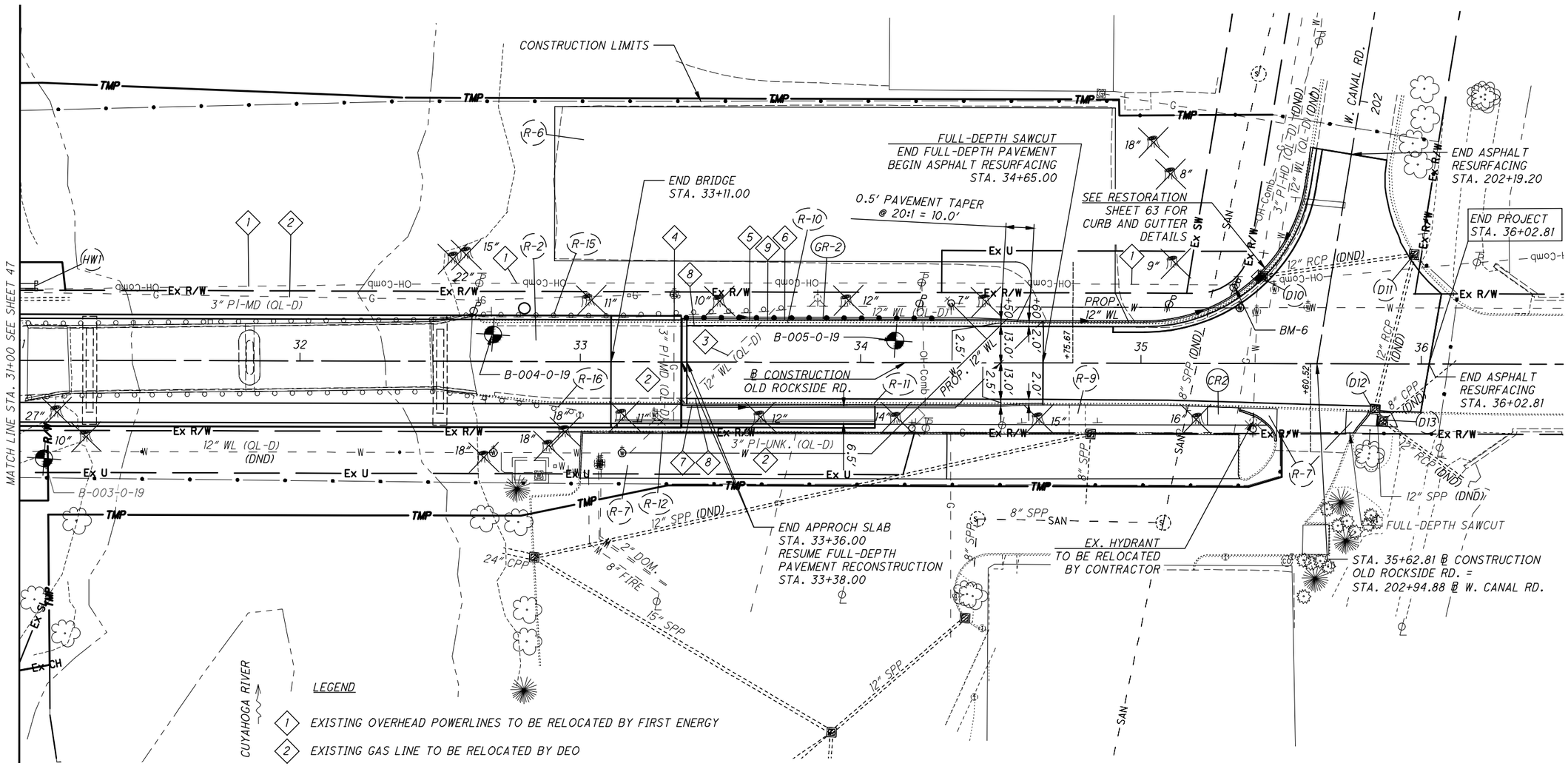

LEGEND

1. EXISTING OVERHEAD POWERLINES TO BE RELOCATED BY FIRST ENERGY
2. EXISTING GAS LINE TO BE RELOCATED BY DEO
3. EXISTING WATERLINE TO BE RELOCATED BY CONTRACTOR
4. STA. 33+33.50, BEGIN BRIDGE TERMINAL ASSEMBLY, TYPE 1
5. STA. 33+60.40, END BRIDGE TERMINAL ASSEMBLY, TYPE 1, BEGIN GUARDRAIL, TYPE MGS
6. STA. 33+72.90, END GUARDRAIL, TYPE MGS, BEGIN ANCHOR ASSEMBLY, TYPE E
7. SEE ITEM 609 - COMBINATION CURB AND GUTTER, TYPE 2, AS PER PLAN A GENERAL NOTE FOR CURB HEIGHT TRANSITION
8. SEE TYPICAL SECTION FOR GUTTER SLOPE TRANSITION DETAILS
9. TYPE E ANCHOR ASSEMBLY SHALL BE OFFSET 9" FROM THE CURB PER MGS-5.3

CONSTRUCTION LIMITS

SOIL BORING/PAVEMENT CORE

NOTE

SEE SHEET 61 FOR DRIVEWAY PROFILES

HORIZONTAL SCALE IN FEET
0 10 20 40

CALCULATED VLE
CHECKED JTP

PLAN - OLD ROCKSIDE ROAD
STA. 31+00 TO STA. 36+50

CUY - OLD ROCKSIDE ROAD

50
157

P:\PR57030\Cadd\Sheets\ORR_91563_GP002.dwg 02-Sep-21 6:28 PM

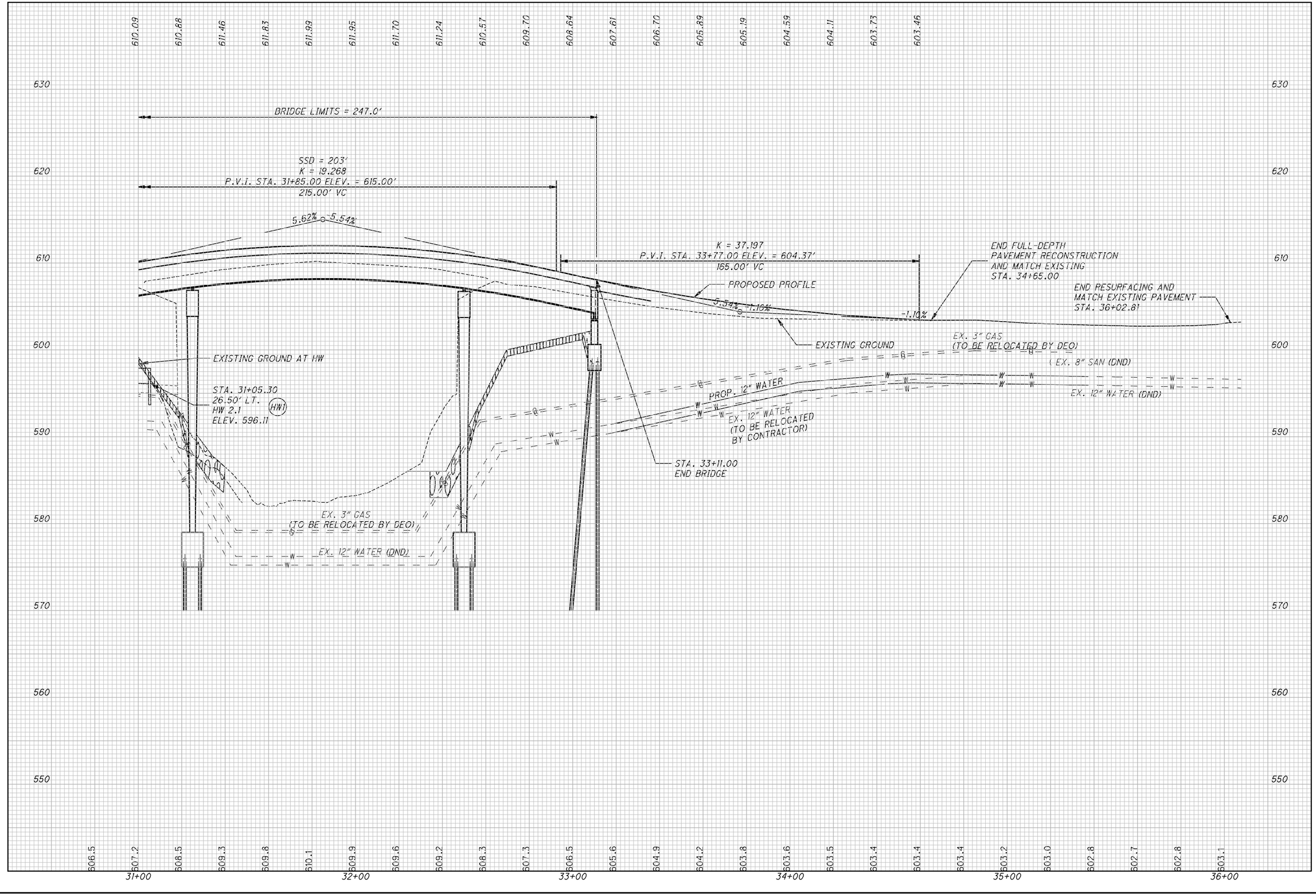

P:\PR57030\Cadd\Sheets\ORR_91563_GF002.dwg 02-Sep-21 6:29 PM

CALCULATED VLE
CHECKED JTP

PROFILE - OLD ROCKSIDE ROAD
STA. 31+00 TO STA. 36+00

CUY - OLD ROCKSIDE ROAD

SEEDING END WIDTH	SEEDING SQ. YDS.
0	39
14	24
0	0
0	0
0	63

℄ CONSTRUCTION OLD ROCKSIDE RD.

610 / 605 / 600 / 595

TMP

EX R/W

EX. 3" GAS (DND)

EX. 8" SAN. (DND)

27+00.00
602.6

26+50.00
602.9

26+20.00
603.4
BEGIN ASPHALT RESURFACING
BEGIN PROJECT

26+00.00
603.8

NOTE: ITEM 670 - SLOPE EROSION PROTECTION MAT, TYPE B SHALL BE INSTALLED ON ALL SURFACES 4:1 OR STEEPER

60 50 40 30 20 10 0 10 20 30 40 50 60

END AREA CUT	END AREA FILL	VOLUME CUT	VOLUME FILL
0	0	0	0
0	0	0	0
0	0	0	0
0	0	0	0
0	0	0	0

CALCULATED VLE
CHECKED JTP

CROSS SECTIONS - OLD ROCKSIDE ROAD STA. 26+00 TO STA. 27+00

CUY - OLD ROCKSIDE ROAD

52
157

P:\PR57030\Cadd\Sheets\ORR_91563_XS001.dwg 02-Sep-21 6:30 PM

SEEDING END WIDTH	SEEDING SQ. YDS.
51	145
53	141
48	134
0	0
0	
	420

END AREA CUT	END AREA FILL	VOLUME CUT	VOLUME FILL
40	3	23	3
8	2	5	3
1	3	1	3
0	0	0	0
0	0	29	9

CALCULATED VLE
CHECKED JTP

℄ CONSTRUCTION OLD ROCKSIDE RD.

R/W

EX R/W

01.71 / 65.00

48:1

3:1

17:1

D2

STA. 28+50.00, 19.57' LT.
CB2-2B, APP
GRATE ELEV. 600.76
12" (W) 597.92
15" (S) 597.67
18" (NE) 597.42

EX. 3" GAS (DND)

EX. 8" SAN. (DND)

36' - 15" TYPE B @ 0.44%

EX. CATCH BASIN
STA. 28+68.03, 19.79' LT.
GRATE 600.54
EX. 12" W&E 597.79
(TBR)

RD1

STA. 28+50.00, 18.00' RT.
CB2-2B, APP
GRATE ELEV. 601.79
15" (N) 597.83

D1

EX. 12" WATER (DND)

602.08
28+50.00
602.0

01.88 / 65.00

EX. 3" GAS (DND)

EX. 12" STM. (DND)

EX. 8" SAN. (DND)

EX. 12" WATER (DND)

602.18
28+12.00
602.2
BEGIN FULL DEPTH PAVEMENT

TMP

01.93 / 60.00

D9

EX. CATCH BASIN
STA. 28+68.03, 19.79' LT.
GRATE 600.99
EX. 12" E 598.49
(DND)

EX. 3" GAS (DND)

EX. SAN. MANHOLE
STA. 27+94.23, 13.83' LT.
RIM 601.56
EX. 8" E&W 592.86
(ATG)

SA-1

28+00.00
602.2

EX. 3" GAS (DND)

EX. 8" SAN. (DND)

NOTE: ITEM 670 - SLOPE EROSION PROTECTION MAT, TYPE B SHALL BE INSTALLED ON ALL SURFACES 4:1 OR STEEPER

27+50.00
602.2

60 50 40 30 20 10 0 10 20 30 40 50

CROSS SECTIONS - OLD ROCKSIDE ROAD STA. 27+50 TO STA. 28+50

CUY - OLD ROCKSIDE ROAD

P:\PR57030\Cadd\Sheets\ORR_91563_XS002.dwg 02-Sep-21 6:30 PM

SEEDING END WIDTH	SEEDING SQ. YDS.
70	406
76	375
59	306
51	1087

℄ CONSTRUCTION OLD ROCKSIDE RD.

SA-2
STA. 29+82.81, 17.45' LT.
MH-3, APP A
RIM 604.56
EX. 8" W 594.23

PROPOSED FINAL CVSR DRIVE SUBBASE

02.60 / 85.00 — 48:1 — R/W — EX R/W — 01.42 / 28.21 — 3:1

EX. 3" GAS (TO BE RELOCATED BY DEO)

PROP. 21" TYPE B

EX. 12" STM. (TBR)

EX. SAN. MANHOLE
STA. 29+82.81, 15.18' LT.
RIM 601.03
EX. 8" W 594.23
(TBR)

1.0'

EX. 12" WATER (DND)

605.08
30+00.00
602.1

EX. CLEANOUT (DND)

02.62 / 85.00 — 48:1 — R/W — EX R/W — 01.34 / 23.45 — 3:1

STA. 29+25.00, 15.00' LT.
CB-3, APP
GRATE ELEV. 602.84
12" (N/S) 597.41
D7

STA. 29+25.00, 15.00' RT.
CB-3, APP
GRATE ELEV. 602.84
12" (W/S) 597.59
D6

2:1

SA-3
70' - 6" CONDUIT, TYPE E, AS PER PLAN AT EXISTING GRADE

EX. SANITARY LATERAL (DND)

EX. 3" GAS (TO BE RELOCATED BY DEO)

30' - 12" TYPE B @ 0.60%

9' - 12" TYPE B @ 0.60%

7' - 12" TYPE B @ 0.60%

D5
STA. 29+25.00, 21.36' RT.
CB-7C, APP
GRATE ELEV. 601.05
12" (N) 597.63

EX. 8" SAN. (DND)

EX. 12" WATER (DND)

D3
STA. 29+25.00, 23.24' LT.
MH-3, APP
RIM ELEV. 600.45
12" (S) 597.36
18" (SW) 596.86
21" (NE) 596.61

EX. CATCH BASIN
STA. 29+72.47, 20.09' LT.
GRATE 600.39
EX. 12" W 597.04
EX. 12" E 596.99
(TBR)
RD4

603.41
29+50.00
600.9

LEGEND

ITEM 204 - GEOGRID PLACED ABOVE
ITEM SPECIAL - SUBGRADE GEOTEXTILE FABRIC

ITEM 203 - GRANULAR MATERIAL, TYPE C

02.44 / 90.00 — 46:1 — R/W — EX R/W — 4.62%

RD3
EX. CATCH BASIN
STA. 29+25.10, 18.45' LT.
GRATE 600.17
EX. 12" W&E 597.37
EX. 12" S 597.42
(TBR)

PROP. 18" TYPE B

EX. 3" GAS (TO BE RELOCATED BY DEO)

EX. 33' - 12" @ 1.10% (TBR)

EX. CATCH BASIN
STA. 29+25.95, 14.28' LT.
GRATE 600.03
EX. 12" N 597.78
(TBR)
RD2

EX. 8" SAN. (DND)

EX. 12" WATER (DND)

602.41
29+00.00
601.4

NOTE: ITEM 670 - SLOPE EROSION PROTECTION MAT, TYPE B SHALL BE INSTALLED ON ALL SURFACES 4:1 OR STEEPER

80 70 60 50 40 30 20 10 0 10 20 30

END AREA CUT	END AREA FILL	VOLUME CUT	VOLUME FILL
324	19		
224	25		
		508	41
164	12		
		360	35
40	3		
		189	14
		1057	90

CALCULATED VLE
CHECKED JTP

CROSS SECTIONS - OLD ROCKSIDE ROAD STA. 29+00 TO STA. 30+00

CUY - OLD ROCKSIDE ROAD

54
157

P:\PR57030\Cadd\Sheets\ORR_91563_XS003.dwg 02-Sep-21 6:32 PM

SEEDING	
END WIDTH	SQ. YDS.
23	35
22	216
	178
87	341
70	770

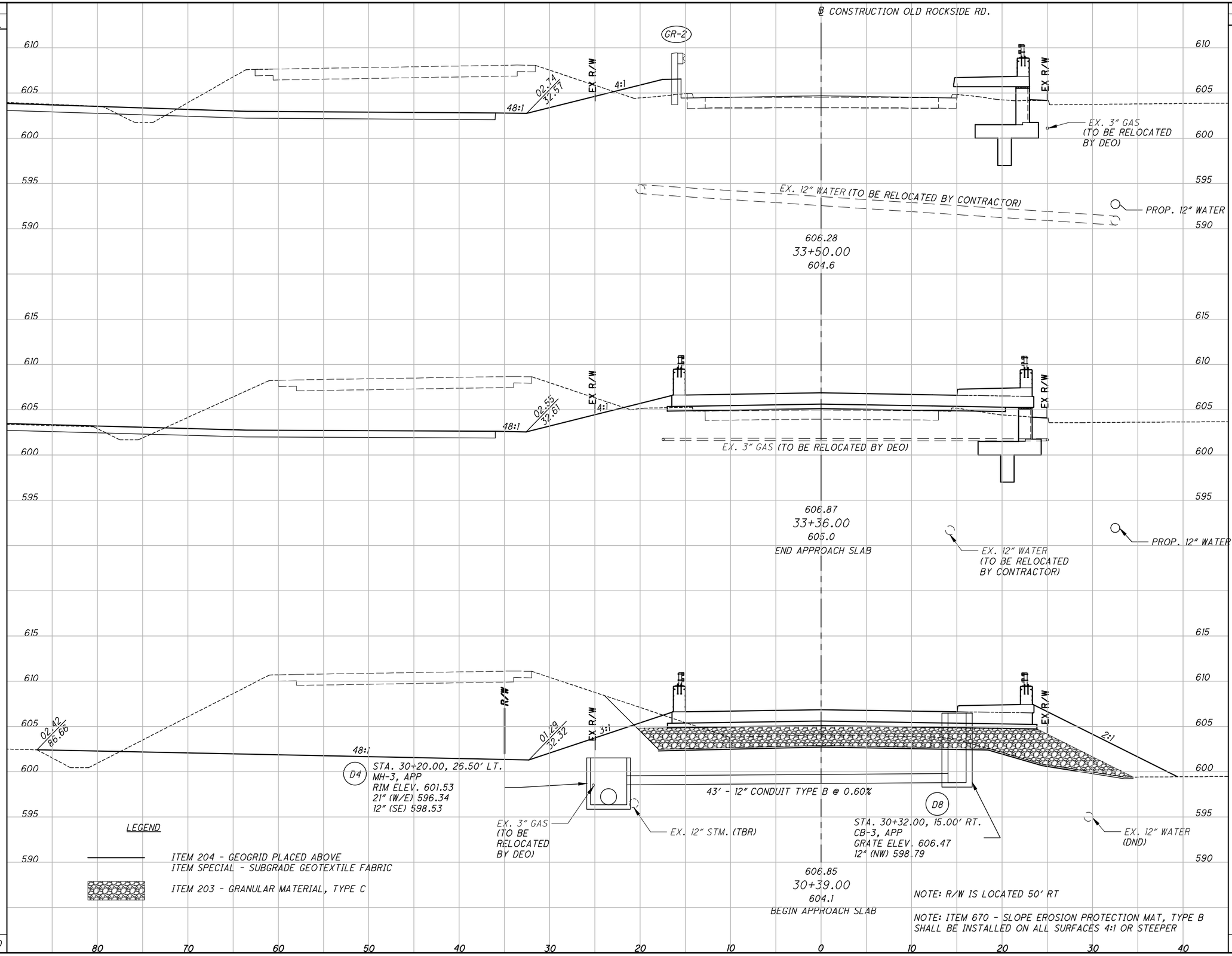

END AREA	
CUT	FILL
203	20
236	10
412	48
324	19

VOLUME	
CUT	FILL
114	8
483	9
270	19
532	49
1399	85

CALCULATED JMS
CHECKED JTP

CROSS SECTIONS - OLD ROCKSIDE ROAD STA. 30+39 TO STA. 33+50

CUY - OLD ROCKSIDE ROAD

P:\PR57030\Cadd\Sheets\ORR_91563_XS004.dwg 02-Sep-21 6:32 PM

SEEDING END WIDTH	SEEDING SQ. YDS.
24	90
22	37
22	125
23	128
23	380

END AREA CUT	END AREA FILL	VOLUME CUT	VOLUME FILL
6	34	32	34
43	17	22	8
36	11	113	19
85	9	267	27
203	20	434	88

CALCULATED VLE
CHECKED JTP

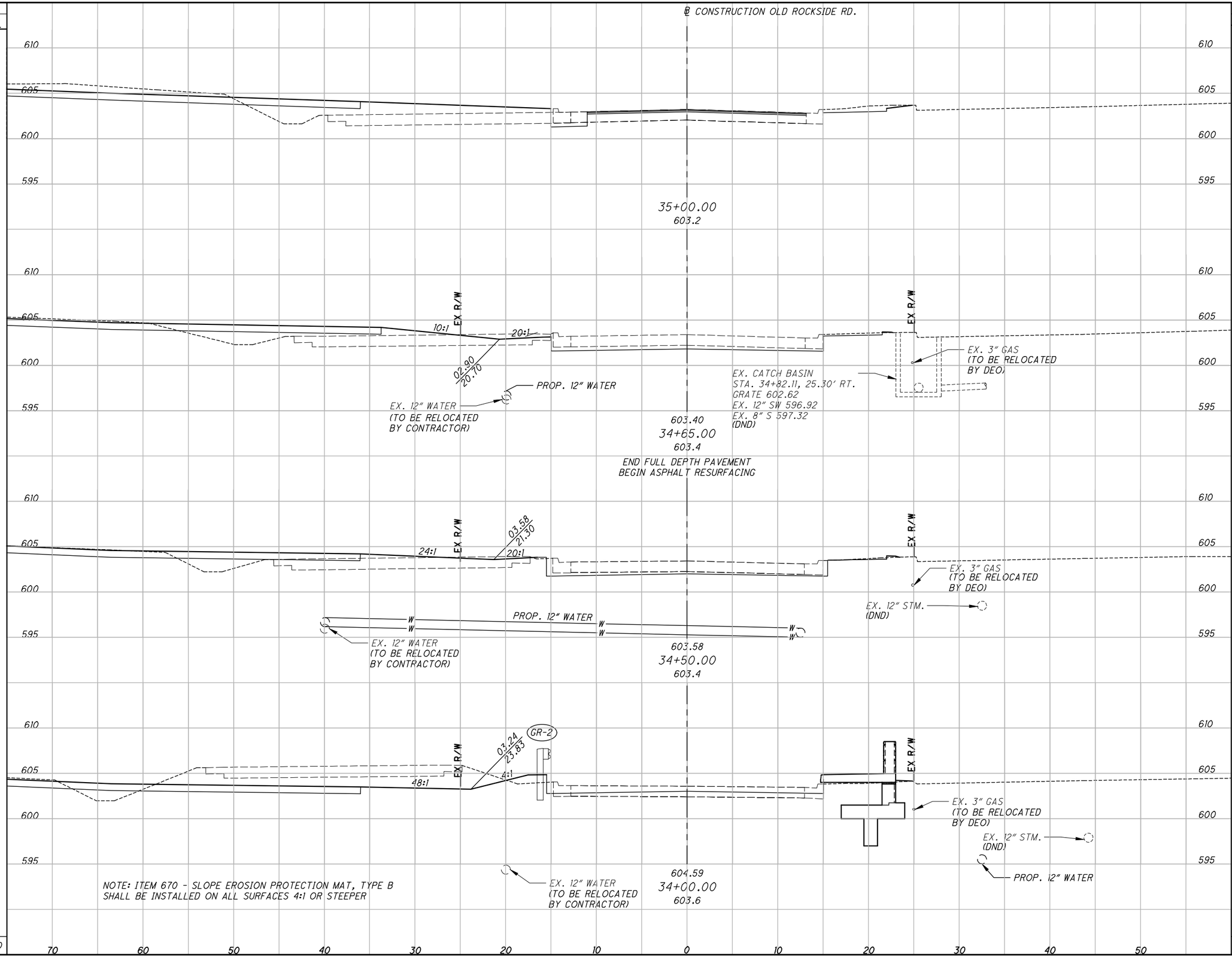

CROSS SECTIONS - OLD ROCKSIDE ROAD STA. 34+00 TO STA. 34+65

CUY - OLD ROCKSIDE ROAD

56
157

P:\PR57030\Cadd\Sheets\ORR_91563_XS005.dwg 02-Sep-21 6:33 PM

SEEDING	
END WIDTH	SQ. YDS.
16	53
22	69
27	24
20	146

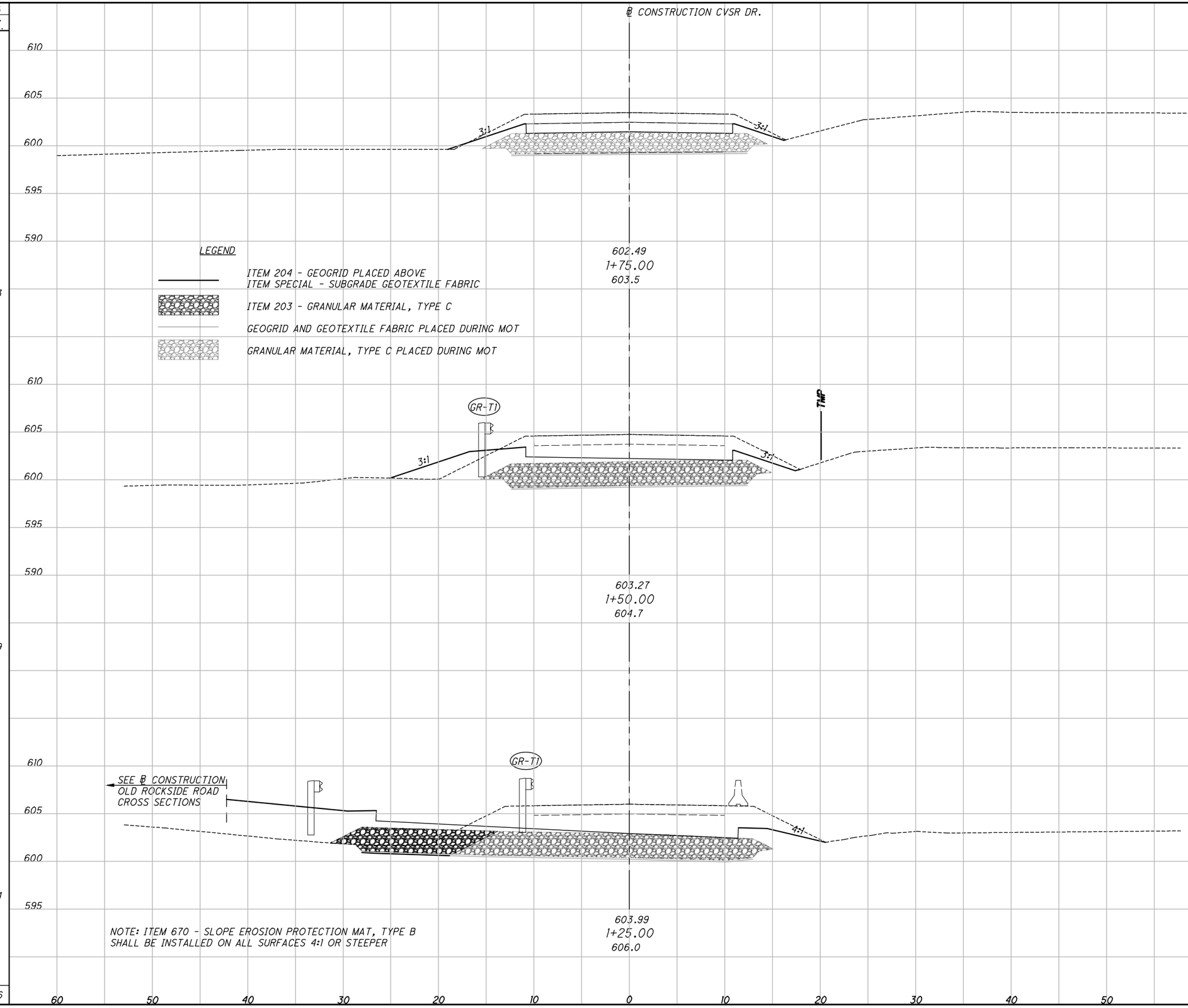

END AREA		VOLUME	
CUT	FILL	CUT	FILL
30	1		
		34	1
43	1		
68	55	52	26
69	30	24	15
		110	42

CALCULATED VLE
CHECKED JTP

CROSS SECTIONS - CVSR DRIVE
STA. 1+25 TO STA. 1+75

CUY - OLD ROCKSIDE ROAD

P:\PR57030\Cadd\Sheets\ORR_91563_XS101.dwg 02-Sep-21 6:34 PM

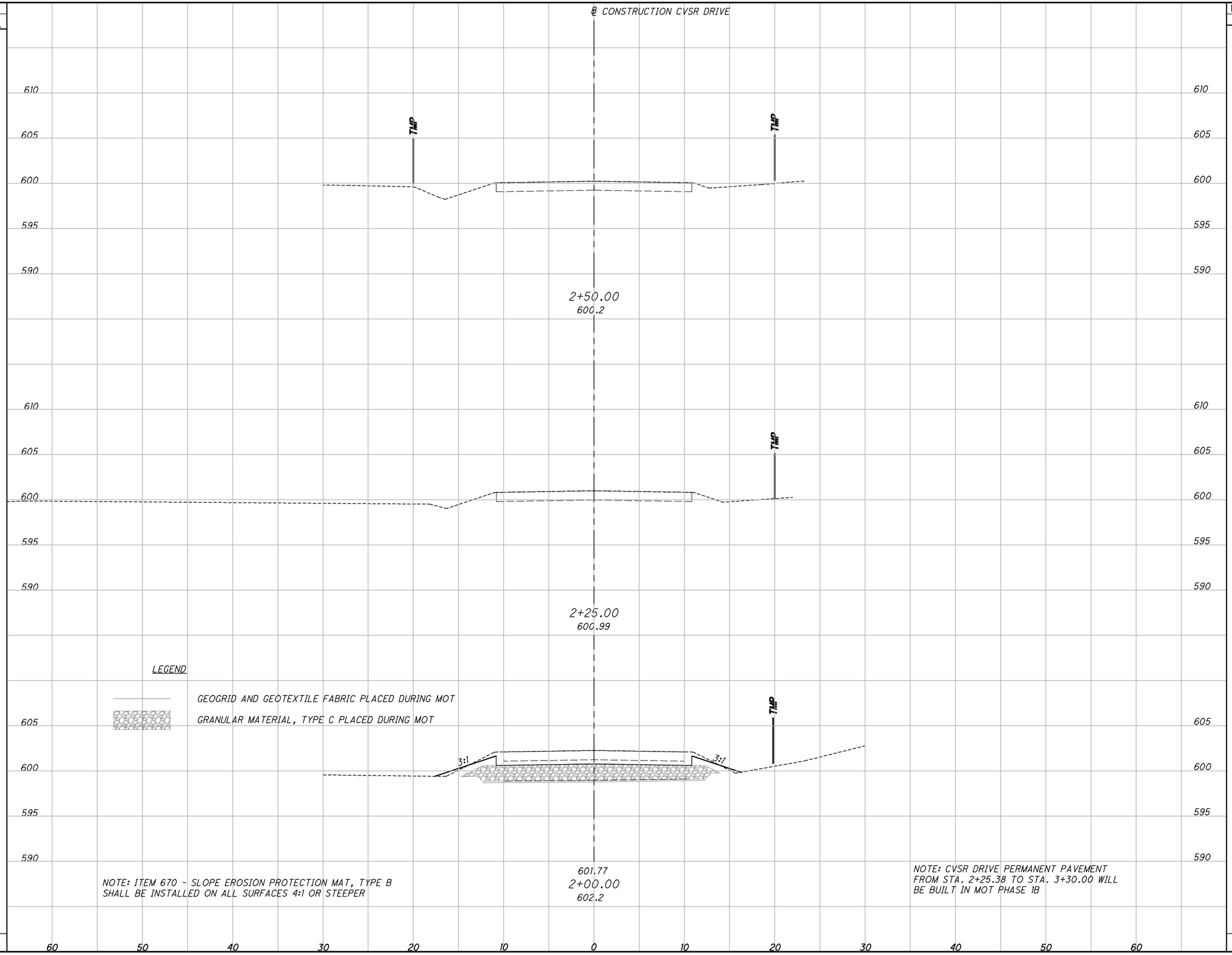

SEEDING	
END WIDTH	SQ. YDS.
0	
	21
15	
	43
16	
	64

END AREA	
CUT	FILL
0	0
13	1
30	1

VOLUME	
CUT	FILL
7	1
34	1
41	2

CALCULATED VLE
CHECKED JTP

CROSS SECTIONS - CVSR DRIVE STA. 2+00 TO STA. 2+50

CUY - OLD ROCKSIDE ROAD

58
157

P:\PR57030\Cadd\Sheets\ORR_91563_XS102.dwg 02-Sep-21 6:34 PM

SEEDING	
END WIDTH	SQ. YDS.

℄ CONSTRUCTION CVSR DRIVE

610
605
600
595
590
585
580

TMP

3+25.00
599.71

3+00.00
599.5

2+75.00
599.64

NOTE: ITEM 670 - SLOPE EROSION PROTECTION MAT, TYPE B SHALL BE INSTALLED ON ALL SURFACES 4:1 OR STEEPER

NOTE: CVSR DRIVE PERMANENT PAVEMENT FROM STA. 2+25.38 TO STA. 3+30.00 WILL BE BUILT IN MOT PHASE 1B

60 50 40 30 20 10 0 10 20 30 40 50 60

END AREA		VOLUME	
CUT	FILL	CUT	FILL

CALCULATED SAF
CHECKED JTP

CROSS SECTIONS - CVSR DRIVE
STA. 2+75 TO STA. 3+25

CUY - OLD ROCKSIDE ROAD

59
157

P:\PR57030\Cadd\Sheets\ORR_91563_XS103.dwg 02-Sep-21 6:35 PM

SEEDING	
END WIDTH	SQ. YDS.

℄ CONSTRUCTION CVSR DRIVE

615
610
605
600
595
590

3+50.00
600.0

TMP

TMP

NOTE: ITEM 670 - SLOPE EROSION PROTECTION MAT, TYPE B SHALL BE INSTALLED ON ALL SURFACES 4:1 OR STEEPER

3+30.00
599.8

NOTE: CVSR DRIVE PERMANENT PAVEMENT FROM STA. 2+25.38 TO STA. 3+30.00 WILL BE BUILT IN MOT PHASE 1B

60 50 40 30 20 10 0 10 20 30 40 50 60

END AREA		VOLUME	
CUT	FILL	CUT	FILL

CALCULATED SAF
CHECKED JTP

CROSS SECTIONS - CVSR DRIVE
STA. 3+30 TO STA. 3+50

CUY - OLD ROCKSIDE ROAD

P:\PR57030\Cadd\Sheets\ORR_91563_XS104.dwg 02-Sep-21 6:36 PM

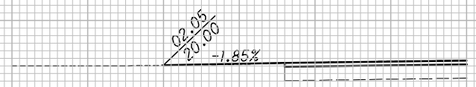

STA. 27+26.96 LT.

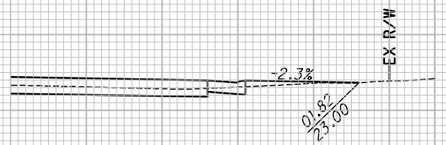

STA. 28+79.30 RT.

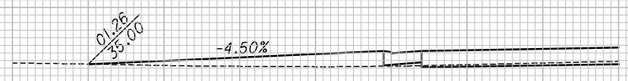

STA. 28+94.63 LT.

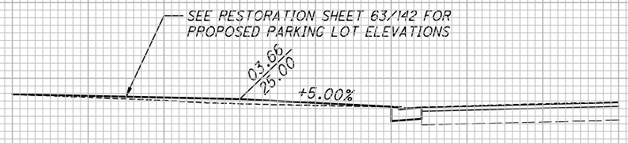

STA. 34+75.67 LT.

610 605 600

30 20 10 0 10 20 30

CALCULATED VLE
CHECKED JTP

DRIVEWAY PROFILES

CUY - OLD ROCKSIDE ROAD

61
157

P:\PR57030\Cadd\Sheets\ORR_91563_GD001.dwg 02-Sep-21 6:36 PM

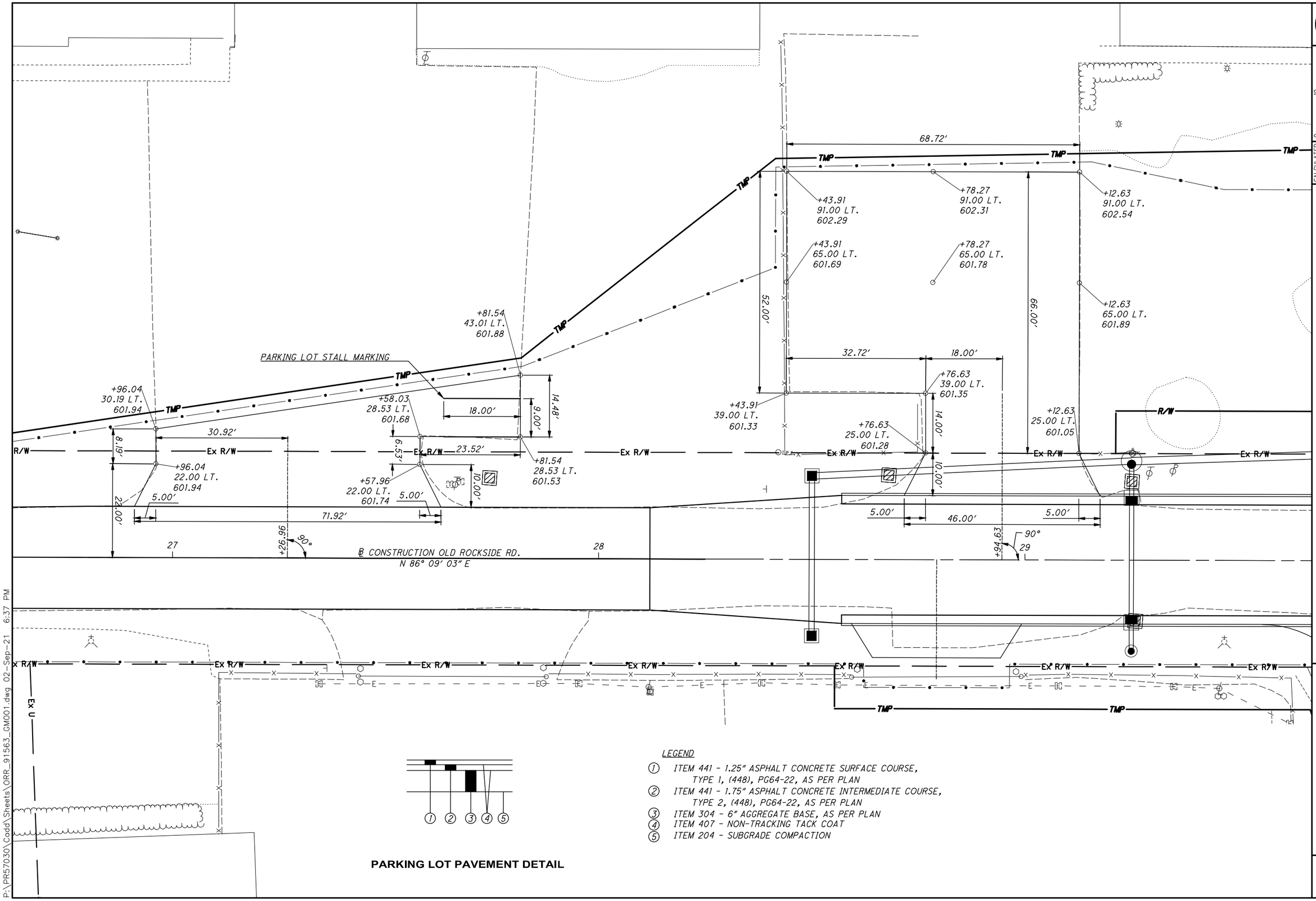

PARKING LOT PAVEMENT DETAIL

LEGEND

1. ITEM 441 - 1.25" ASPHALT CONCRETE SURFACE COURSE, TYPE 1, (448), PG64-22, AS PER PLAN
2. ITEM 441 - 1.75" ASPHALT CONCRETE INTERMEDIATE COURSE, TYPE 2, (448), PG64-22, AS PER PLAN
3. ITEM 304 - 6" AGGREGATE BASE, AS PER PLAN
4. ITEM 407 - NON-TRACKING TACK COAT
5. ITEM 204 - SUBGRADE COMPACTION

HORIZONTAL SCALE IN FEET
0 5 10 20

CALCULATED VLE
CHECKED JTP

RESTORATION PLAN

CUY - OLD ROCKSIDE ROAD

62
157

P:\PR57030\Cadd\Sheets\ORR_91563_GM001.dwg 02-Sep-21 6:37 PM

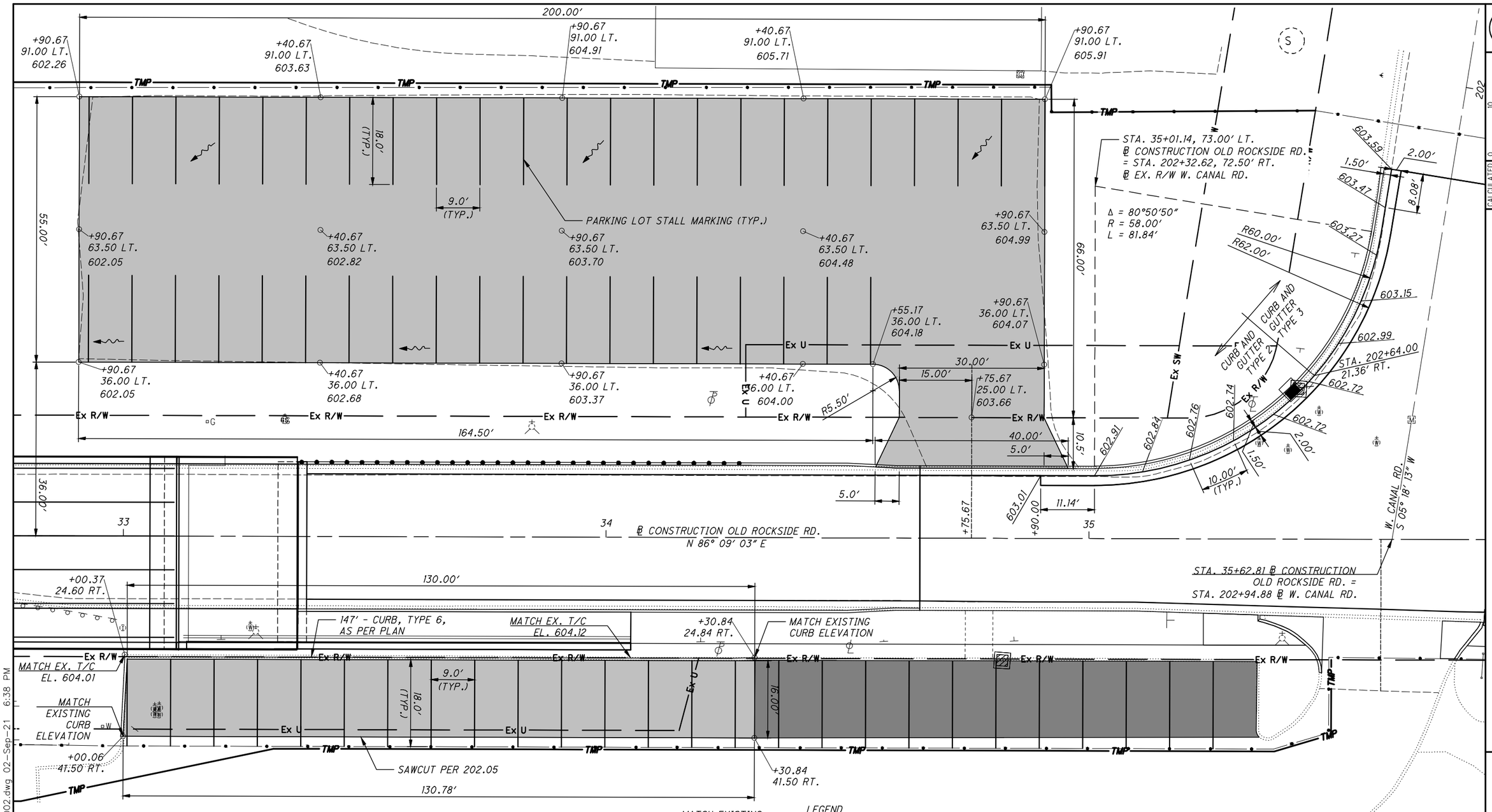

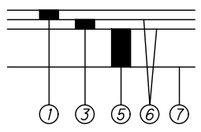

PARKING LOT FULL DEPTH PAVEMENT DETAIL

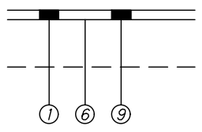

PARKING LOT RESURFACING DETAIL

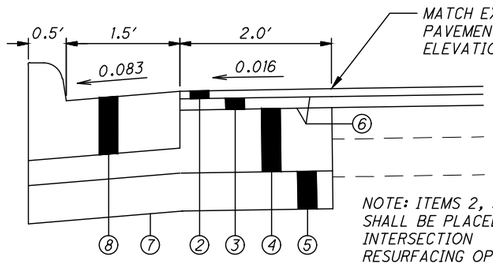

NOTE: ITEMS 2, 3, AND 6 SHALL BE PLACED DURING INTERSECTION RESURFACING OPERATIONS

W. CANAL CURB & PAVEMENT DETAIL

LEGEND

① ITEM 441 - 1.25″ ASPHALT CONCRETE SURFACE COURSE, TYPE 1, (448), PG64-22, AS PER PLAN

② ITEM 441 - 1.25″ ASPHALT CONCRETE SURFACE COURSE, TYPE 1, (448), PG70-22M, AS PER PLAN

③ ITEM 441 - 1.75″ ASPHALT CONCRETE INTERMEDIATE COURSE, TYPE 2, (448), PG64-22, AS PER PLAN

④ ITEM 302 - 10″ ASPHALT CONCRETE BASE, PG64-22, AS PER PLAN (PLACED AS 4″ LIFT PRIOR TO CURB AND GUTTER CONSTRUCTION FOLLOWED BY 6″ LIFT AFTER CURB AND GUTTER CONSTRUCTION)

⑤ ITEM 304 - 6″ AGGREGATE BASE, AS PER PLAN

⑥ ITEM 407 - NON-TRACKING TACK COAT

⑦ ITEM 204 - SUBGRADE COMPACTION

⑧ ITEM 609 - COMBINATION CURB AND GUTTER, TYPE 2 OR TYPE 3, AS PER PLAN (THICKNESS = 9″)

⑨ ITEM 254 - PAVEMENT PLANING, ASPHALT CONCRETE, 1.25″, AS PER PLAN

PARKING LOT RESURFACING PER DETAIL THIS SHEET

FULL DEPTH PARKING LOT RECONSTRUCTION PER DETAIL THIS SHEET

HORIZONTAL SCALE IN FEET
0 5 10 20

CALCULATED VLE
CHECKED JTP

RESTORATION PLAN

CUY - OLD ROCKSIDE ROAD

P:\PRS7030\Cadd\Sheets\ORR_91563_GM002.dwg 02-Sep-21 6:38 PM

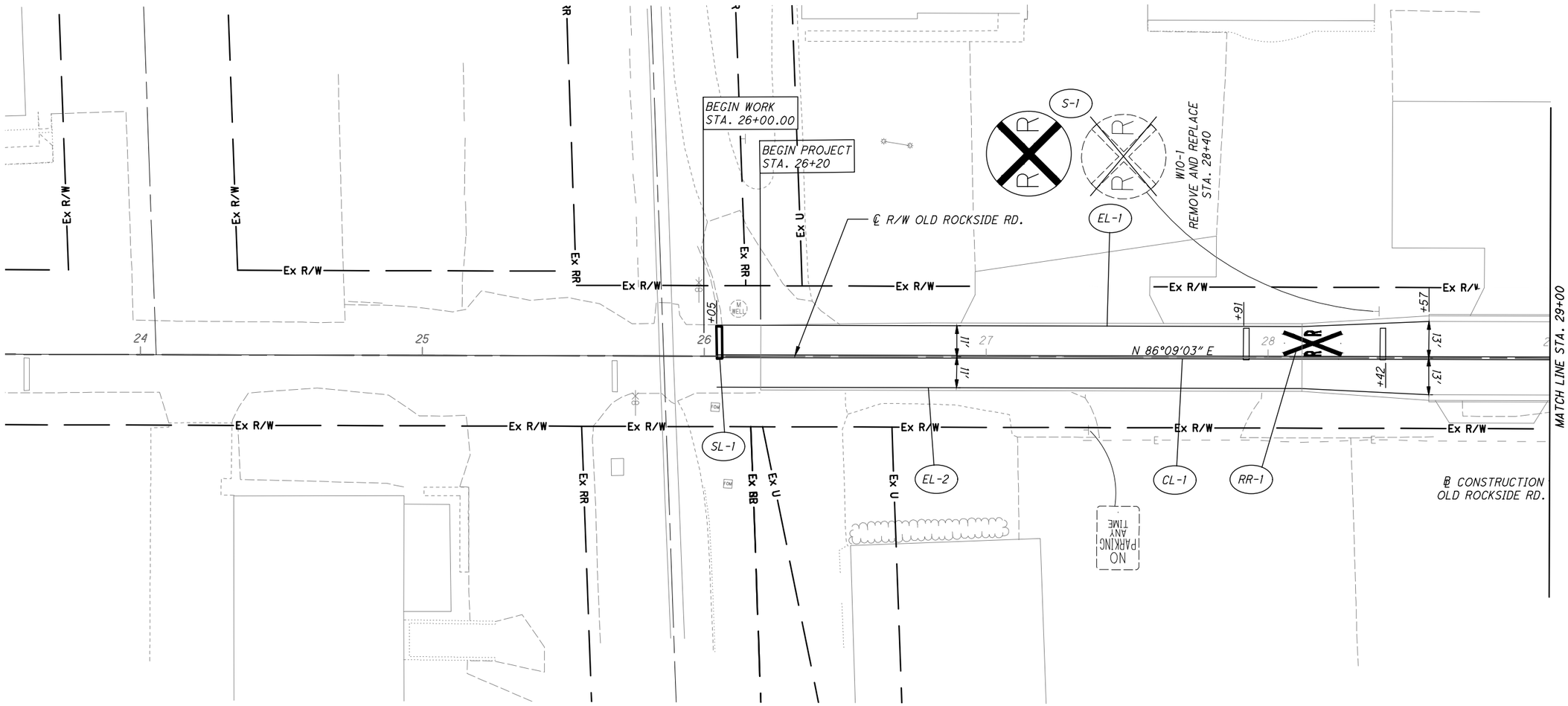

LEGEND

- *EXISTING GROUND MOUNTED* SIGN
- *EXISTING SIGN, TO REMAIN*
- *EXISTING SIGN, TO BE REMOVED*
- S — *PROPOSED SIGN*
- EL — *ITEM 646 - EDGE LINE*
- CL — *ITEM 646 - CENTER LINE*
- CW — *ITEM 646 - CROSSWALK LINE*
- SL — *ITEM 646 - STOP LINE*
- RR — *ITEM 646 - RAILROAD SYMBOL MARKING*

HORIZONTAL SCALE IN FEET
0 10 20 40

CALCULATED RMP
CHECKED JTP

PAVEMENT MARKING AND SIGNING PLAN
STA. 23+50 TO STA. 29+00

CUY - OLD ROCKSIDE ROAD

64
157

P:\PR57030\Cadd\Sheets\ORR_91563_TP001.dwg 02-Sep-21 6:39 PM

P:\PR57030\Cadd\Sheets\ORR_91563_TP002.dwg 02-Sep-21 6:39 PM

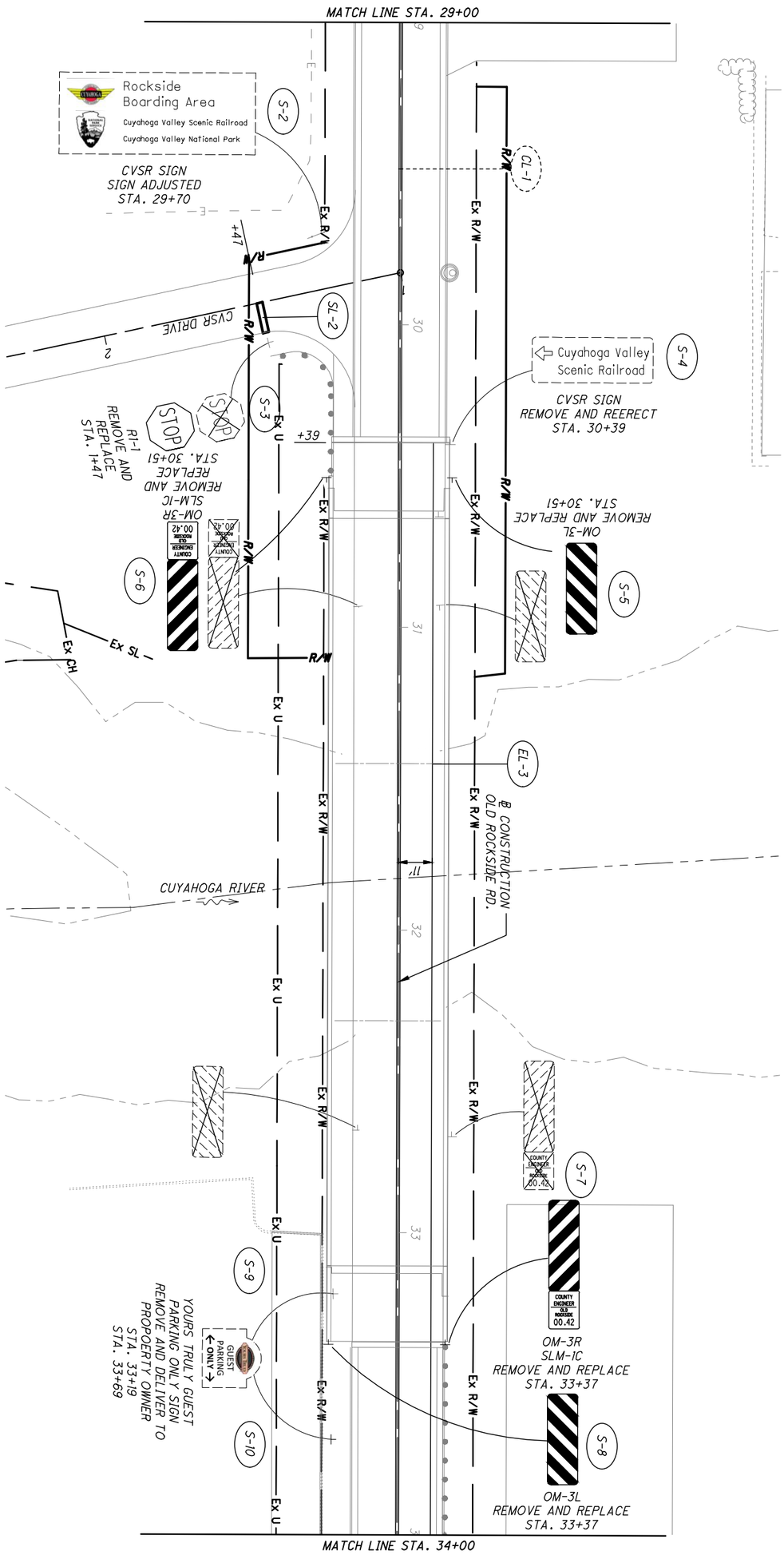

LEGEND

+	EXISTING GROUND MOUNTED SIGN
[ ]	EXISTING SIGN, TO REMAIN
[X]	EXISTING SIGN, TO BE REMOVED
[ ]	PROPOSED SIGN
S	
EL	ITEM 646 - EDGE LINE
CL	ITEM 646 - CENTER LINE
CW	ITEM 646 - CROSSWALK LINE
SL	ITEM 646 - STOP LINE
RR	ITEM 646 - RAILROAD SYMBOL MARKING

65 / 157	CUY - OLD ROCKSIDE ROAD	PAVEMENT MARKING AND SIGNING PLAN STA. 29+00 TO STA. 34+00	CALCULATED RMP / CHECKED JTP	0 20 / 10 40 HORIZONTAL SCALE IN FEET

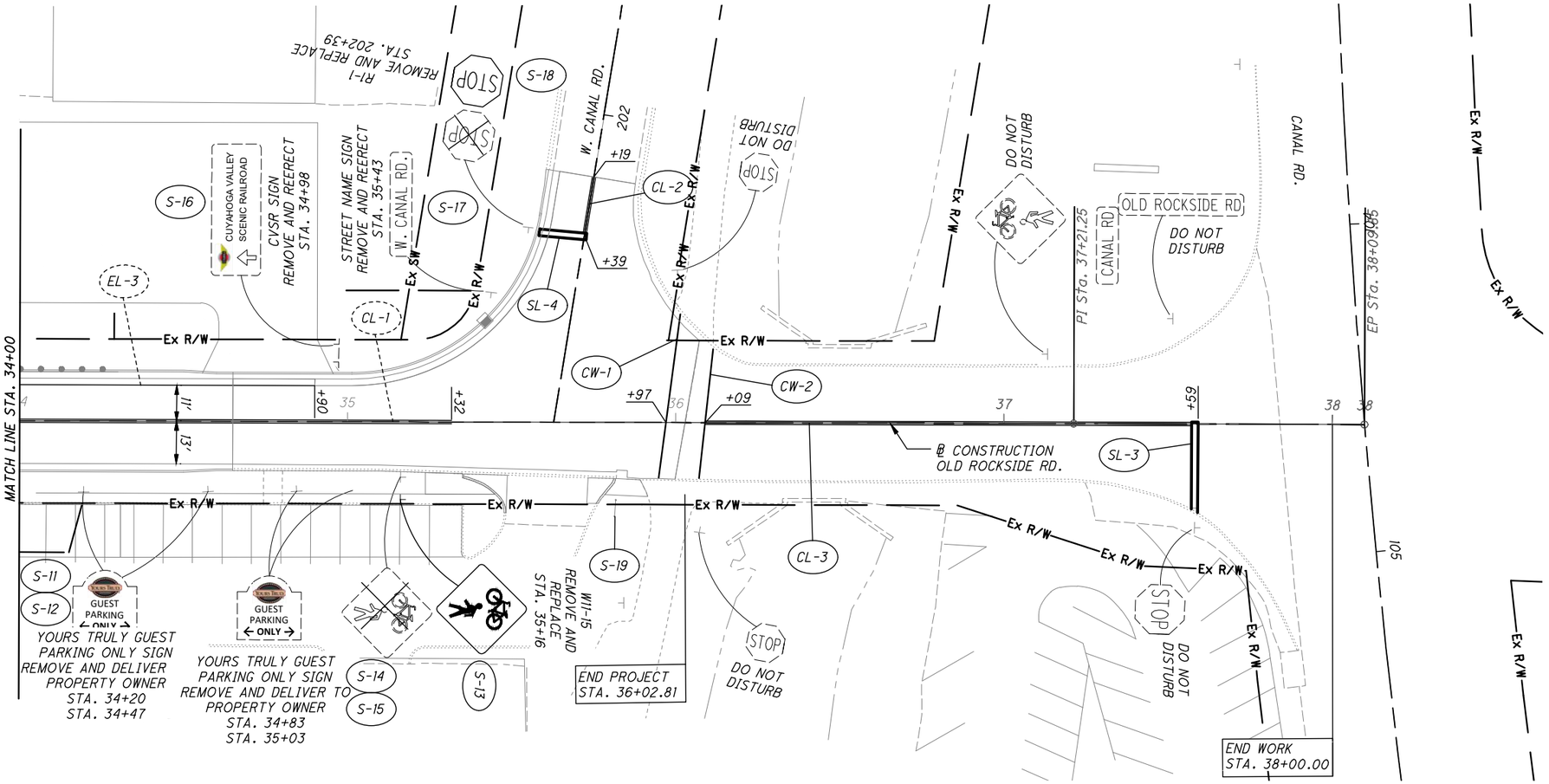

NOTE

SEE RESTORATION PLAN SHEET, PAGE 63 FOR PARKING LOT STALL MARKINGS

LEGEND

- EXISTING GROUND MOUNTED SIGN
- EXISTING SIGN, TO REMAIN
- EXISTING SIGN, TO BE REMOVED
- (S) PROPOSED SIGN

- (EL) ITEM 646 - EDGE LINE
- (CL) ITEM 646 - CENTER LINE
- (CW) ITEM 646 - CROSSWALK LINE
- (SL) ITEM 646 - STOP LINE
- (RR) ITEM 646 - RAILROAD SYMBOL MARKING

HORIZONTAL SCALE IN FEET
0 10 20 40

CALCULATED RMP
CHECKED JTP

PAVEMENT MARKING AND SIGNING PLAN
STA. 34+00 TO END

CUY - OLD ROCKSIDE ROAD

66
157

P:\PR57030\Cadd\Sheets\ORR_91563_TP003.dwg 02-Sep-21 6:40 PM

CALCULATED SAF CHECKED JTP

WATER WORK GENERAL NOTES

CUY - OLD ROCKSIDE ROAD

CLEVELAND WATER DEPARTMENT GENERAL NOTES

CONTRACTORS ARE TO ABIDE BY THE MOST CURRENT VERSION OF THE CLEVELAND WATER NOTES AND DETAILS. THE MOST UP-TO-DATE VERSION CAN BE FOUND AT WWW.CLEVELANDWATER.COM/CONSTRUCTION/

GENERAL

1. ALL WATER WORK REQUIRED, WHETHER SHOWN ON THE PLANS, INCLUDED IN THE FOLLOWING NOTES, AS DIRECTED BY CLEVELAND WATER, OR AS DIRECTED BY THE PROJECT ENGINEER, SHALL BE INCLUDED IN THE ASSOCIATED WATER WORK PAY ITEMS INCLUDED IN THESE PLANS.

2. THE INFORMATION SHOWN ON THE CLEVELAND DIVISION OF WATER'S SUMMARY OF WORK/CHARGE LETTER, STRIP MAPS, AS BUILT DRAWINGS, GIS, AND THESE PLANS ARE TAKEN FROM EXISTING AVAILABLE RECORDS, AND THEIR ACCURACY IS NOT GUARANTEED.

3. CALL THE INSPECTION AND ENFORCEMENT UNIT AT 216-664-2342 TO SCHEDULE A PRE-CONSTRUCTION MEETING AT LEAST ONE WEEK PRIOR TO STARTING WATER MAIN CONSTRUCTION. THE OPERATION OF ANY VALVE OR ALTERATION OF ANY PART OF THE WATER SYSTEM BY CONTRACTORS OR THEIR EMPLOYEES IS PROHIBITED WITHOUT THE SUPERVISION OF THE CLEVELAND DIVISION OF WATER INSPECTOR.

4. PRIOR TO REQUESTING CHLORINATION, THE CONTRACTOR SHALL SUPPLY THE CLEVELAND WATER INSPECTOR WITH REDLINE DRAWINGS SHOWING CHANGES MADE FROM THE APPROVED DESIGN DRAWINGS AND ACTUAL MEASUREMENTS. CHLORINATION SHALL NOT OCCUR BEFORE THESE DRAWINGS ARE SUBMITTED.

5. FOR THE PURPOSES OF CHLORINATION AND BACTERIOLOGICAL TESTING OF THE WATER MAINS THE CONTRACTOR SHALL PROVIDE AND INSTALL, AT EACH OF THE CHLORINATION PIT LOCATIONS SHOWN AND AT OTHER LOCATIONS DETERMINED BY CLEVELAND WATER. FLUSHING / SAMPLING TAP SIZES ARE TO BE DETERMINED BY CLEVELAND WATER. CHLORINATION PITS SHALL BE SIX (6) FOOT SQUARE AND ARE TO MEET OSHA STANDARDS. NO CUSTOMER TAPS SHALL BE INSTALLED PRIOR TO CHLORINATION.

6. A TWO YEAR WARRANTY, COMMENCING FROM THE DATE OF ACCEPTANCE OF THE FINAL CHLORINATION OF THE WATER MAIN INSTALLATION SHALL BE PROVIDED BY THE CONTRACTOR FOR ALL WATER MAINS AND SERVICE CONNECTION WORK PERFORMED BY THE CONTRACTOR, INCLUDING TAPS IF PERFORMED. SHOULD ANY LEAKS OCCUR AND REPAIRS BE REQUIRED DUE TO DEFECTIVE MATERIAL OR POOR WORKMANSHIP. A LETTER INDICATING THE COMMENCEMENT DATE AND END DATE OF THE WARRANTY SHALL BE INCLUDE WITH THE AS-BUILT SUBMISSION IN NOTE 12.

7. USE BACKFILL MATERIAL AS SPECIFIED AND COMPACT SUFFICIENTLY IN THOSE AREAS WHERE EXISTING MAINS AND WATER SERVICE CONNECTIONS ARE EXPOSED. (SEE CLEVELAND WATER STANDARD DETAIL STD-001 ON FOLLOWING PAGE)

8. ALL MATERIALS, INCLUDING BUT NOT LIMITED TO WATER MAINS, FIRE HYDRANTS, VALVES, CONNECTION MATERIALS AND OTHER WATER APPURTENANCES, SHALL BE NEW AND UNUSED AND SHALL CONFORM TO THE MOST CURRENT CLEVELAND WATER SPECIFICATIONS. ALL MATERIAL SHALL BE INSTALLED IN ACCORDANCE WITH CLEVELAND WATER'S STANDARDS. ALL MATERIALS MUST MEET THE BUY AMERICA REQUIREMENT.

9. THE CONTRACTOR SHALL BE RESPONSIBLE FOR ANY DAMAGE TO EXISTING WATER MAINS AND APPURTENANCES THEREOF WHEN CONSTRUCTING OR CONNECTING THE NEW WATER MAIN. THIS SHALL INCLUDE LEADED JOINTS IN EXISTING FITTINGS WHICH MAY REQUIRE REPLACEMENT FITTINGS AT THE DISCRETION OF THE INSPECTOR IF IT IS DETERMINED THEY WERE DISTURBED. ALL REPAIRS TO DAMAGED EXISTING FACILITIES SHALL BE MADE BY THE CONTRACTOR, AT THE PROJECT'S EXPENSE, TO THE SATISFACTION OF CLEVELAND WATER.

10. ALL HYDROSTATIC PRESSURE TESTING SHALL BE DONE BY THE CONTRACTOR IN THE PRESENCE OF THE CLEVELAND WATER INSPECTOR. THE HYDROSTATIC TEST PRESSURE SHALL BE 75 PSI ABOVE THE STATIC PRESSURE PREVAILING AT THE SITE, BUT IN NO CASE LESS THAN 150 PSI. THE PRESSURE TEST SHALL BE FOR A DURATION OF TWO (2) HOURS WITH THE PRESSURE BEING MAINTAINED WITHIN 5 PSI OF THE REQUIRED TEST PRESSURE. SHOULD THE PRESSURE TEST FAIL THE CONTRACTOR SHALL FIND AND CORRECT THE DEFICIENCY(IES) TO THE SATISFACTION OF CLEVELAND WATER AND REPEAT THE TWO (2) HOUR PRESSURE TEST.

11. ALL BURIED WATER MAINS, FITTINGS, VALVES, FIRE HYDRANT BRANCH PIPING AND APPURTENANCES SHALL BE ENCASED WITH POLYETHYLENE WRAPPING IN ACCORDANCE WITH THE MOST CURRENT REVISION OF ANSI/AWWA C-105/A21.5 INSTALLATION METHOD "A". ALTERNATE INSTALLATION METHOD A FOR WET TRENCH CONDITIONS SHALL BE USED WHEN WATER MAINS ARE INSTALLED IN UNPAVED LOCATIONS SUCH AS TREE LAWNS AND EASEMENTS TRAVERSING PRIVATE PROPERTY.

12. THE PROJECT'S PROFESSIONAL ENGINEER OR A DESIGNATED PROFESSIONAL SURVEYOR SHALL OBTAIN ACTUAL FIELD MEASUREMENTS OF THE MAIN DURING INSTALLATION AND SHALL FURNISH THE CLEVELAND WATER INSPECTOR WITH AS-BUILT DRAWINGS MEETING CLEVELAND WATER STANDARDS WITHIN 30 DAYS OF THE WATER MAIN GOING INTO SERVICE AND ALL TAPS/RETAPS BEING MADE. ONE HARD COPY AND ONE PDF COPY SHALL BE PROVIDED. DRAWINGS SHALL BE SIGNED, DATED, AND STAMPED WITH THE ENGINEER OR SURVEYOR'S SEAL. REDLINE DRAWINGS ARE NOT SUFFICIENT. CLEVELAND WATER RESERVES THE RIGHT TO WITHHOLD PAYMENT AND/OR APPROVAL OF FUTURE WORK IF AS-BUILTS ARE NOT SUBMITTED. THE COST OF RETAINING A PROFESSIONAL ENGINEER OR PROFESSIONAL SURVEYOR FOR THE WORK OUTLINED ABOVE AND THE COST TO PREPARE AND SUBMIT AS-BUILT DRAWINGS SHALL BE INCLUDED IN THE PERTINENT WATER ITEMS.

WATER MAINS

13. ALL PIPE, UNLESS OTHERWISE APPROVED BY CLEVELAND WATER, SHALL BE DUCTILE IRON, MINIMUM CLASS 52, CEMENT LINED HAVING PUSH-ON JOINTS WITH RADIALLY COMPRESSED RUBBER RING GASKET AND INSTALLED AS PER THE MOST CURRENT REVISION OF AWWA C600.

14. ALL FITTINGS, UNLESS OTHERWISE CALLED FOR, SHALL BE APPROVED DUCTILE IRON, CLASS 350, CEMENT LINED OR FUSION BONDED EPOXY COATED. ALL FITTINGS AND PIPE CONNECTED TO FITTINGS SHALL BE RESTRAINED USING A "RETAINED" MECHANICAL JOINT CONFORMING TO THE MATERIAL AND PERFORMANCE REQUIREMENTS OF ANSI/AWWA C-110/A21.10 AND ANSI/AWWA C-111/A21.11, OR "COMPACT" FITTINGS IN ACCORDANCE WITH ANSI/AWWA C-153/A21.53. EXCEPT FOR ANCHOR TEES, REDUCERS OR OTHER SPECIAL CIRCUMSTANCES WHEN BY CLEVELAND WATER, ALL FITTINGS ARE TO HAVE BELL ENDS.

15. ALL BOLTS AND NUTS ON ALL "RETAINED" MECHANICAL JOINTS SHALL HAVE FIELD APPLIED ONE (1) COAT OF BITUMASTIC PAINTING.

16. WHERE SHOWN ON THE PLANS, OR WHEN OTHERWISE CALLED FOR, PIPE AND FITTINGS SHALL HAVE AN APPROVED "TYPE I" OR "TYPE II" BOLTLESS RESTRAINED PUSH-ON JOINTS TO THE LIMITS SHOWN ON THE DRAWINGS.

17. AT THE END OF EACH WORKDAY, THE CONTRACTOR SHALL PLUG ALL OPEN PIPE ENDS WITH WATER TIGHT PLUGS AS PER THE "PREVENTITIVE AND CORRECTIVE MEASURES DURING CONSTRUCTION" SECTION OF THE MOST CURRENT REVISION OF AWWA C-651 AS TO PREVENT THE INFILTRATION OR INTRUSION OF ANY FOREIGN OBJECTS OR MATERIALS. DATE STAMPED DIGITAL PHOTOS SHALL BE PROVIDED FOR EACH WORKDAY DEMONSTRATING THAT PROPER AWWA C-651 METHODS WERE USED TO PLUG ALL OPEN WATER MAIN ENDS. EACH PHOTO SHALL CLEARLY IDENTIFY THE STATION AT WHICH THE PIPE IS PLUGGED. THE STATIONING SHALL BE SHOWN BY THE USE OF A STATION MARKER PLACED AT THE PLUGGED PIPE END.

PHOTOS SHALL BE SUBMITTED ON A DAILY BASIS UNLESS OTHERWISE DEFINED BY THE CLEVELAND WATER INSPECTOR OR ENGINEER. ALL PHOTOS TAKEN OVER THE COURSE OF THE PROJECT SHALL BE SUBMITTED BY THE CONTRACTOR AS PART OF THE AS-BUILT SUBMITTAL. PHOTOS ARE TO INCLUDE STATIONING MARKERS. AS-BUILTS SHALL BE DEEMED INCOMPLETE WITHOUT SAID COLLECTION OF DIGITAL PHOTOS.

HYDRANTS

18. IN ALL HYDRANT INSTALLATIONS THE CONTRACTOR SHALL FACE ALL HYDRANT'S 5" (STEAMER) NOZZLE TOWARD THE PAVEMENT PRIOR TO TESTING AND CHLORINATION OF WATER MAINS. ONLY CLEVELAND WATER APPROVED HYDRANT MODELS SHALL BE INSTALLED. CONTRACTOR SHALL CONSULT WITH THE LOCAL MUNICIPALITY'S ENGINEERING OR SERVICE DEPARTMENT TO OBTAIN HYDRANT NOZZLE THREAD REQUIREMENTS IF NOT INDICATED ON THE APPROVED PLANS.

VALVES

19. ALL VALVES SHALL BE AN APPROVED MODEL RESILIENT SEATED GATE VALVES AS PER THE MOST CURRENT VERSION OF AWWA C509 OR C515. VALVE OPERATING NUTS SHALL BE TAPERED (1 7/8" TO 2" FROM TOP TO BOTTOM) AND 2" DEEP. VALVES MORE THAN 10 YEARS OLD AT TIE IN POINTS TO EXISTING MAINS SHALL BE REPLACED AT THE PROJECT'S EXPENSE UNLESS OTHERWISE DIRECTED.

SERVICE CONNECTIONS

20. ANY CITYSIDE LEAD SERVICE CONNECTION ENCOUNTERED SHALL BE REPLACED WITH TYPE K COPPER OR OTHER APPROVED MATERIAL. IF OWNERSIDE LEAD WILL REMAIN, THE CONTRACTOR SHALL IMMEDIATELY NOTIFY CLEVELAND WATER DEPARTMENT BY CALLING 216-664-2882 AND LEAVING A CLEVELAND WATER DEPARTMENT SUPPLIED CUSTOMER NOTIFICATION DOOR-HANGER ON ALL ACCESSIBLE POINTS OF ENTRY TO THE HOME.

21. AS PART OF THE AS BUILT SUBMISSION IN NOTE 12, THE CONTRACTOR SHALL PROVIDE A TABLE SHOWING ALL EXISTING CONNECTIONS, IDENTIFIED BY CLEVELAND WATER CONNECTION NUMBER, SHOWING THE FOUND CONNECTION MATERIAL FOR BOTH THE CITYSIDE AND OWNERSIDE CONNECTION, AS WELL AS THE NEW CONNECTION MATERIAL FOR ALL CONNECTIONS REPLACED. THE TABLE SHALL ALSO NOTE ANY REVISED CONNECTION MEASUREMENTS AND SIZES. A SAMPLE TABLE WILL BE PROVIDED. THE SUBMISSION SHALL BE IN MICROSOFT EXCEL FORMAT. CLEVELAND WATER SHALL REQUIRE THE DELIVERY AND ACCEPTANCE OF THIS TABLE BEFORE THE PRESSURE TEST AND CHLORINATION / DISINFECTION OF THE MAIN WILL BE PERMITTED.

22. NEW WATER SERVICE CONNECTIONS LOCATIONS, IF ANY, SHOWN ON THESE DRAWINGS ARE FOR REFERENCE ONLY AND ARE NOT PART OF THE WATER MAIN APPROVAL. THE SPECIFIC LOCATION FOR EACH CONNECTION WILL BE DETERMINED BY CLEVELAND WATER PRIOR TO THE TAPS BEING INSTALLED. ALL PERMITS FOR TAPS AND METERS FOR PARCELS ASSOCIATED WITH THE WATER MAINS INSTALLED ON THIS PROJECT ARE TO BE OBTAINED BY THE LAND OWNER OF SAID IMPROVEMENT PLANS. IT IS THE LAND OWNERS RESPONSIBILITY TO ARRANGE FOR OBTAINING PERMITS FOR ALL WATER SERVICE CONNECTIONS BEFORE ANY SERVICE CONNECTION WORK MAY PROCEED. ALL FEES CAN BE OBTAINED FROM THE CLEVELAND WATER PERMITS AND SALES SECTION AT 216-664-3130, PROMPT #7 OR 216-664-2444 X75209.

ACCOUNTS SHALL BE INITIATED IN THE LAND OWNER'S NAME AS PART OF THE PERMITTING PROCESS. ALL RESPONSIBILITIES ASSOCIATED WITH EACH WATER SERVICE, INCLUDING, THE OWNER SIDE INSPECTIONS, METER SET / METER PIPING INSPECTION AND THE METER INSTALLATION SHALL BE THE RESPONSIBILITY OF SAID OWNER.

METERS INSTALLATIONS WILL NOT BE AUTHORIZED TO BE INSTALLED UNTIL ALL INSPECTIONS HAVE BEEN COMPLETED. ESTIMATED BILLS MAY ENSUE IF A HOME IS IDENTIFIED AS HAVING WATER SERVICE BUT NO METER HAS BEEN INSTALLED. IF NEW OWNERS, ONCE PARCELS ARE SOLD OFF AND TRANSFER TITLE, DO NOT CONTACT CLEVELAND WATER TO ESTABLISH ACCOUNTS IN THEIR NAME, ACCOUNTS AND THEIR ASSOCIATED BILLS WILL REMAIN IN THE NAME OF OUR LAST OWNER OF RECORD WHICH MAY BE THE DEVELOPER OR BUILDER. IT IS THE RESPONSIBILITY OF THE NEW OWNER TO TRANSFER ACCOUNTS INTO THEIR NAME WHEN THE PROPERTIES LEGALLY TRANSFER. UPON TRANSFER OF PROPERTY, SELLER OF PROPERTY MUST COMMUNICATE ALL UNCOMPLETED PORTIONS OF THE REFERENCED RESPONSIBILITIES TO THE NEW OWNER.

23. ONE INCH SERVICE CONNECTIONS SHALL BE PERMITTED TO SERVICE NEW HOMES (AS SHOWN ON APPROVED WATER MAIN EXTENSION PLANS) BASED ON THE FOLLOWING CRITERIA:

- PEAK FLOW DEMANDS DO NOT EXCEED 25 GALLONS PER MINUTE FOR AN INDIVIDUAL HOME/UNIT. INCLUSIVE OF ALL USAGE (DOMESTIC AND/OR IRRIGATION),
- LENGTH OF ONE INCH CONNECTION DOES NOT EXCEED 75 FEET AS MEASURED FROM THE MAIN TO THE POINT OF ENTRY INTO THE PROPOSED HOME/UNIT.
- THE CONNECTIONS DO NOT INCLUDE LIMITED AREA OR NFPA (NATIONAL FIRE PROTECTION ASSOCIATION) 13D SPRINKLER SYSTEMS

ANY SERVICE REQUESTS DIFFERING FROM THE STATED CRITERIA SHALL REQUIRE THE SUBMITTAL OF A COMPLETE WATER SERVICE APPLICATION FOR EACH WATER SERVICE REQUESTED.

24. ALL CURB VALVE BOXES & METER VAULTS WILL BE INSTALLED IN GRASS AREAS WHEN POSSIBLE. CURB VALVES IN EASEMENTS SHALL BE PLACED APPROXIMATELY 3 FEET OFF THE WATER MAIN. IF VALVE BOXES OR METER VAULTS ARE INSTALLED OUTSIDE OF A DEDICATED RIGHT OF WAY OR EASEMENT FOR THE PURPOSES OF WATER SUPPLY, A STANDARD CLEVELAND EASEMENT FOR A VAULT SHALL BE PROVIDED.

EMERGENCIES

25. IF A WATER MAIN OR SERVICE CONNECTION BREAK OCCURS DURING CONSTRUCTION AND EMERGENCY ASSISTANCE IS REQUIRED, PLEASE NOTIFY CLEVELAND WATER AT 216-664-3060. THIS LINE IS AVAILABLE 24/7/365

P:\PR57030\Cadd\Sheets\ORR_91563_UN001.dwg 02-Sep-21 6:41 PM

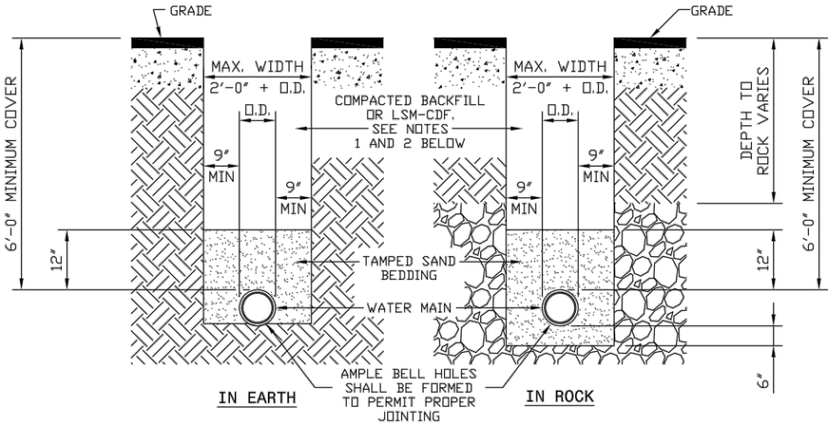

WATER MAIN TRENCH DETAILS

- NOT TO SCALE -

NOTES:
1) PREMIUM BACKFILL CONSISTING OF LOW STRENGTH MORTAR - CONTROLLED DENSITY FILL (LSM-CDF) "FLOWABLE FILL" IS REQUIRED:
   A) UNDER ALL EXISTING OR FUTURE PAVEMENTS, SIDEWALKS AND DRIVES WITHIN THE CITY OF CLEVELAND CORPORATION LIMITS.
   B) AS SPECIFIED IN LOCAL MUNICIPALITIES SERVED BY CWD (SEE LOCAL REQUIREMENTS)
2) WHEN PREMIUM BACKFILL IS REQUIRED BY THE LOCAL MUNICIPALITY FOR CASES OTHER THAN THOSE LISTED IN NOTE 1 ABOVE, IT SHALL BE LIMESTONE GRADED PER ODOT 304.02 OR ODOT 411. NO SLAG IS PERMITTED.
3) CONTRACTOR SHALL USE SPECIAL CARE IN PLACING THE SAND BEDDING, SO AS TO AVOID SCRAPING OF THE EXTERIOR COATING, INJURING THE PIPE, DISTORTING OR MOVING THE PIPE WHEN COMPACTING THE SAME. THE SAND BEDDING SHALL BE TAMPED IN SIX (6) INCH LAYERS, SIMULTANEOUSLY ON EACH SIDE OF THE PIPE, AND THOROUGHLY COMPACTED SO AS TO PROVIDE A SOLID BACKING AGAINST THE EXTERNAL SURFACE OF THE PIPE.
4) MINIMUM COMPACTION FOR ALL SAND BEDDING, BACKFILL AND PREMIUM BACKFILL SHALL BE 95% STANDARD PROCTOR.
5) PAVEMENT, SIDEWALK OR DRIVES TO BE INSTALLED IN ACCORDANCE WITH LOCAL MUNICIPALITY'S SPECIFICATIONS.

STD-001 | DATE: 6-21-2012

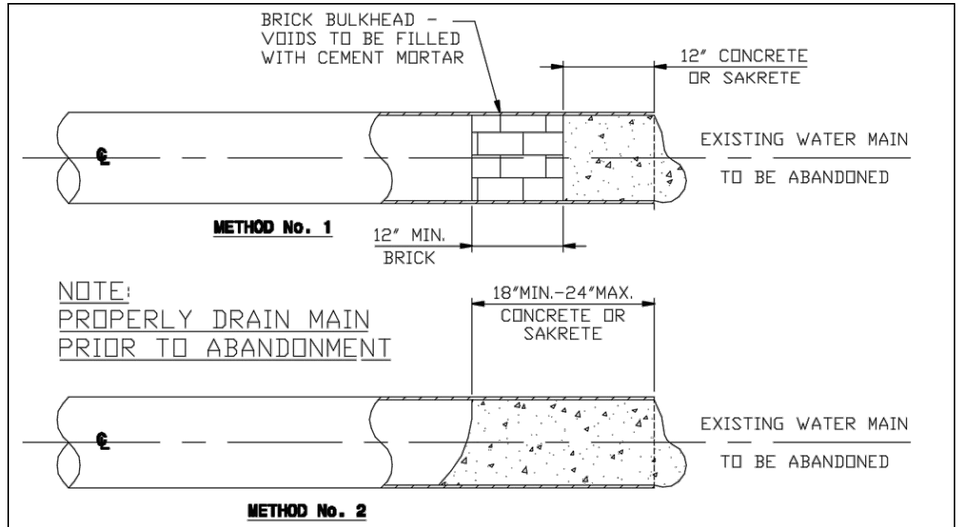

PLUGGING ABANDONED WATER MAIN ENDS

- NOT TO SCALE -

STD-004 | DATE: 10-1-97 | BY: RSK

*CONNECTION SHALL BE MADE WITH RETAINED MECHANICAL JOINT SOLID SLEEVES (SHORT OR LONG PATTERN) DUCTILE IRON CLASS 350 OR CAST IRON CLASS 250 OR COMPRESSION COUPLINGS.

COMPRESSION COUPLINGS SHALL BE OF A GASKETED, SLEEVE TYPE WITH DIAMETERS TO PROPERLY FIT PLAIN END IRON PIPE. EACH COUPLING SHALL CONSIST OF ONE (1) MIDDLE RING, WITHOUT STOPS; TWO (2) FOLLOWER GLANDS; TWO (2) RUBBER-COMPOUND BUNA-N BLEND, WEDGE SECTION GASKETS; AND SUFFICIENT TRACKHEAD STAINLESS STEEL BOLTS AND NUTS (ASTM A276/A193/194, TYPE 304, EXTRA HEAVY HEX) TO PROPERLY COMPRESS THE GASKETS.

MIDDLE RING AND FOLLOWER GLANDS SHALL BE OF EITHER STEEL OR DUCTILE IRON (ASTM-A536).

THE COMPRESSION COUPLING SHALL BE WITHOUT STOPS AND BE RATED FOR A MINIMUM WORKING PRESSURE OF 250 PSI AND SHALL BE EQUAL TO THE DRESSER STYLE No's 38, 138 OR 162 (TRANSITION TYPE), OR SMITH-BLAIR 441 STRAIGHT AND TRANSITION COUPLINGS.

ALL BOLTS AND NUTS ON ALL MECHANICAL JOINTS, INCLUDING THOSE ON THE 'RETAINED' TYPE, SHALL HAVE FIELD APPLIED ONE (1) COAT OF BITUMASTIC PAINTING FOLLOWED BY AN ENCASEMENT OF POLYETHYLENE WRAPPING IN ACCORDANCE WITH ANSI/AWWA C-105/A21.5-88, CLASS 'C', METHOD 'B'.

THE DIVISION OF WATER WILL DETERMINE THE FIELD LOCATION OF THE CUT-IN-VALVE ASSEMBLY. THE DIVISION OF WATER WILL ALSO SET THE TIME OF INSTALLATION OF THE CUT-IN-VALVE ASSEMBLY.

THE CONTRACTOR SHALL DO ALL PIPE CUTTING AND INSTALLATION. HOWEVER, THE INSTALLATION OF THE CUT-IN-VALVE ASSEMBLY SHALL BE DONE UNDER THE SUPERVISION OF THE DIVISION OF WATER.

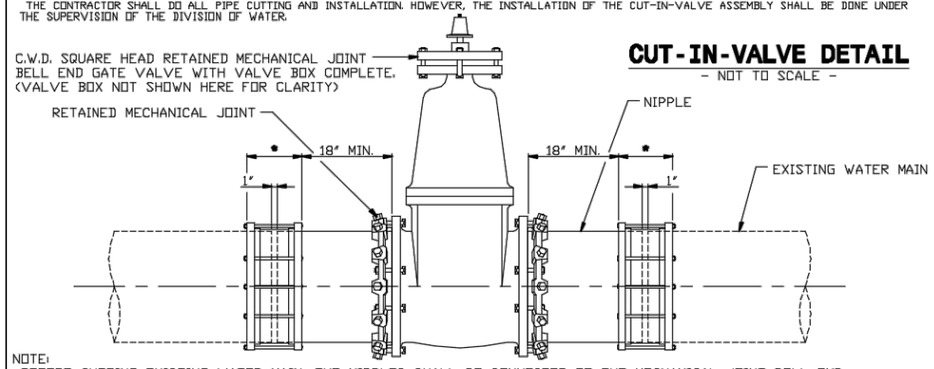

CUT-IN-VALVE DETAIL

- NOT TO SCALE -

NOTE:
BEFORE CUTTING EXISTING WATER MAIN, THE NIPPLES SHALL BE CONNECTED TO THE MECHANICAL JOINT BELL END GATE VALVE. AFTER CUTTING PIPE, FINAL CONNECTIONS SHALL BE MADE WITH COUPLINGS/SOLID SLEEVES AS SPECIFIED.

STD-005 | DATE: 10-1-97 | BY: RSK

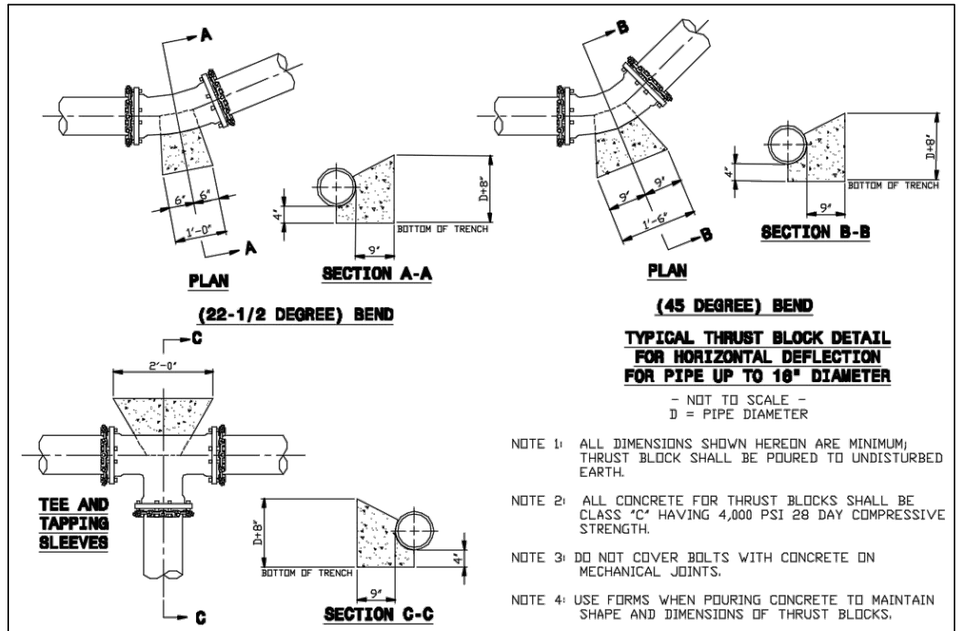

TYPICAL THRUST BLOCK DETAIL FOR HORIZONTAL DEFLECTION FOR PIPE UP TO 18" DIAMETER

- NOT TO SCALE -
D = PIPE DIAMETER

NOTE 1: ALL DIMENSIONS SHOWN HEREON ARE MINIMUM; THRUST BLOCK SHALL BE POURED TO UNDISTURBED EARTH.

NOTE 2: ALL CONCRETE FOR THRUST BLOCKS SHALL BE CLASS 'C' HAVING 4,000 PSI 28 DAY COMPRESSIVE STRENGTH.

NOTE 3: DO NOT COVER BOLTS WITH CONCRETE ON MECHANICAL JOINTS.

NOTE 4: USE FORMS WHEN POURING CONCRETE TO MAINTAIN SHAPE AND DIMENSIONS OF THRUST BLOCKS.

STD-006 | DATE: 1-15-98 | BY: RSK

CALCULATED SAF CHECKED JTP

WATER WORK DETAILS

CUY - OLD ROCKSIDE ROAD

68 157

P:\PR57030\Cadd\Sheets\ORR_91563_UD001.dwg 02-Sep-21 6:41 PM

✻ IF CUTS ARE REQUIRED BETWEEN THE TEE AND VALVE, TOTAL REPLACEMENT WILL BE REQUIRED. SEE DETAILS STD-H06 STD-H07.

✻✻ IF EXISTING HYDRANT BRANCH VALVE IS 4" IN DIAMETER TOTAL REPLACEMENT WILL BE REQUIRED UNLESS SPECIFIC PERMISSION IS GRANTED BY THE DIVISION OF WATER ON A CASE BY CASE BASIS.

CUT AT	SEE DETAIL
①	STD-H02 FOR STRAIGHT TYPE
②	STD-H03 FOR OFFSET TYPE 1
③	STD-H04 FOR OFFSET TYPE 2
④	STD-H05 FOR OFFSET TYPE 3
TOTAL REPLACEMENT	STD-H06 FOR STRAIGHT TYPE STD-H07 FOR OFFSET TYPE 1 & TYPE 2 & TYPE 3

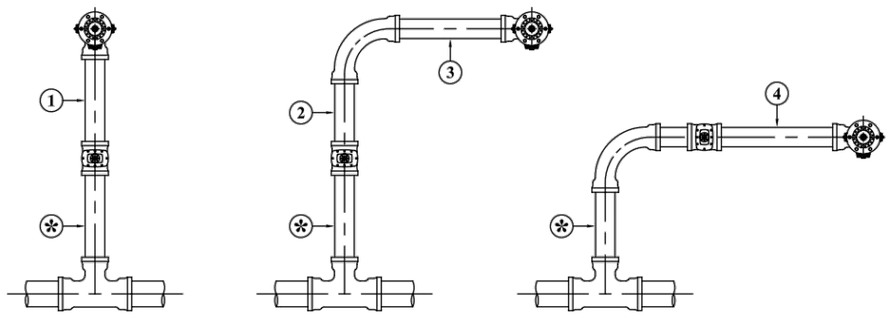

STRAIGHT TYPE OFFSET TYPE 1 & 2 OFFSET TYPE 3

DISTURBING EXISTING LEADED HYDRANTS AND LEADED FITTINGS

- NOT TO SCALE -

STD-H01 | DATE: 5-4-2006 | BY: RSK

INSTALL NEW 6" MECHANICAL JOINT HYDRANT. ADJUST HYDRANT TO GRADE TO MEET FIELD CONDITIONS TURN STEAMER NOZZLE TOWARD PAVEMENT.

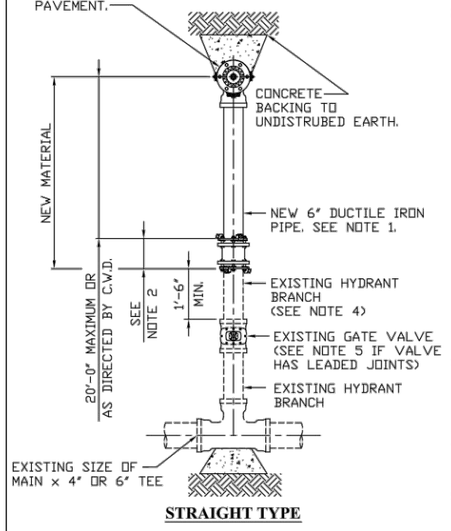

STRAIGHT TYPE

1) PLAIN END x PLAIN END DUCTILE IRON PIPE AS SPECIFIED (CUT TO SUIT).

2) CONNECTION SHALL BE MADE WITH RETAINED MECHANICAL JOINT SOLID SLEEVES (SHORT OR LONG PATTERN) DUCTILE IRON CLASS 350 OR CAST IRON CLASS 250, RETAINED MECHANICAL JOINT REDUCERS WHERE EXISTING PIPE IS 4" IN DIAMETER, OR COMPRESSION COUPLINGS WITH ROD AND CLAMPS AS DIRECTED BY C.W.D. INSPECTOR.

COMPRESSION COUPLINGS SHALL BE OF A GASKETED, SLEEVE TYPE WITH DIAMETERS TO PROPERLY FIT PLAIN END IRON PIPE. EACH COUPLING SHALL CONSIST OF ONE (1) MIDDLE RING, WITHOUT STOPS; TWO (2) FOLLOWER GLANDS; TWO (2) RUBBER-COMPOUND BUNA-N BLEND, WEDGE SECTION GASKETS; AND SUFFICIENT TRACKHEAD STAINLESS STEEL BOLTS AND NUTS (ASTM A276/A193/194, TYPE 304, EXTRA HEAVY HEX) TO PROPERLY COMPRESS THE GASKETS. MIDDLE RING AND FOLLOWER GLANDS SHALL BE OF EITHER STEEL OR DUCTILE IRON (ASTM-A536). THE COMPRESSION COUPLING SHALL BE WITHOUT STOPS AND BE RATED FOR A MINIMUM WORKING PRESSURE OF 250 PSI AND SHALL BE EQUAL TO THE DRESSER STYLE No's 38, 138 (STRAIGHT TYPE), 162 (TRANSITION TYPE), 253 (REDUCING TYPE); OR SMITH-BLAIR 441 (STRAIGHT AND TRANSITION TYPE), R441 (REDUCING TYPE); OR ROMAC STYLE 501 (STRAIGHT AND TRANSITION TYPE), STYLE RC501 (REDUCING TYPE).

IF THE BRANCH IS TO BE SHORTENED, NO NEW IS PIPE REQUIRED.

3) ALL BOLTS AND NUTS ON ALL MECHANICAL JOINTS, INCLUDING THOSE ON THE "RETAINED" TYPE, SHALL HAVE FIELD APPLIED ONE (1) COAT OF BITUMASTIC PAINTING FOLLOWED BY AN ENCASEMENT OF POLYETHYLENE WRAPPING IN ACCORDANCE WITH ANSI/AWWA C-105/A21.5-88, CLASS "C", METHOD "B".

4) IF EXISTING PIPING IS 4" USE 4" TO 6" REDUCING MJ REDUCER OR REDUCING TRANSITION COUPLING WITH ROD & CLAMP IF APPROVED BY CWD.

5) IN HIGH PRESSURE AREAS THE EXISTING VALVE MAY NEED TO BE RESTRAINED TO EXISTING TEE OR FITTING USING ROD & CLAMP AS DIRECTED BY CWD. SEE STD-H01 FOR EXISTING LEAD JOINT REQUIREMENTS.

EXTEND, SHORTEN AND ADJUST HYDRANT TO GRADE, STRAIGHT TYPE

- NOT TO SCALE -

STD-H02 | DATE: 8-20-2012 | BY: RSK

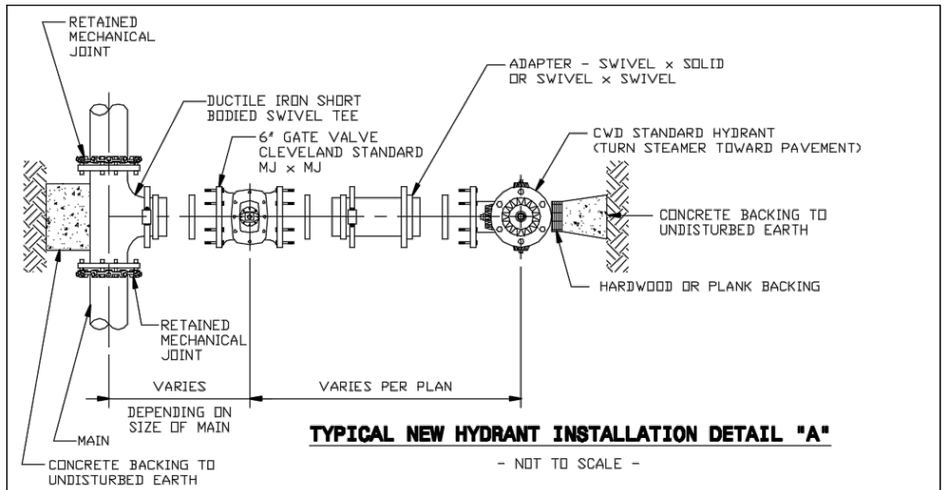

TYPICAL NEW HYDRANT INSTALLATION DETAIL "A"

- NOT TO SCALE -

NOTE: IN LIEU OF SWIVEL BRANCH TEES AND ADAPTERS CONTRACTORS MAY FURNISH HYDRANT BRANCHES HAVING RETAINED MECHANICAL JOINTS INCLUDING HYDRANT SHOE. ALL MECHANICAL JOINTS SHALL HAVE FIELD APPLIED ONE (1) COAT OF BITUMASTIC PAINT. ALL MECHANICAL JOINTS SHALL BE POLYETHYLENE WRAPPED IN ACCORDANCE WITH AWWA C-1-5/A21.5-88 CLASS "C" METHOD "B".

ALL BOLTS AND NUTS FURNISHED WITH RETAINED MECHANICAL JOINTS INCLUDING RETAINER OR WEDGE ACTION TYPE GLANDS SHALL BE COPPER-BEARING DUCTILE IRON, OR EQUIVALENT HIGH STRENGTH, LOW ALLOY CORROSION RESISTANT STEEL.

STD-H09 | DATE: 3-4-2002 | BY: RSK

NOTE:
IN LIEU OF SWIVEL BRANCH TEES AND ADAPTERS CONTRACTORS MAY FURNISH HYDRANT BRANCHES HAVING RETAINED MECHANICAL JOINTS INCLUDING HYDRANT SHOE. ALL MECHANICAL JOINTS SHALL HAVE FIELD APPLIED ONE (1) COAT OF BITUMASTIC PAINT. ALL MECHANICAL JOINTS SHALL BE POLYETHYLENE WRAPPED IN ACCORDANCE WITH AWWA C-105/A21.5-88 CLASS "C" METHOD "B".

ALL BOLTS AND NUTS FURNISHED WITH RETAINED MECHANICAL JOINTS INCLUDING RETAINER OR WEDGE ACTION TYPE GLANDS SHALL BE COPPER-BEARING DUCTILE IRON, OR EQUIVALENT HIGH STRENGTH, LOW ALLOY CORROSION RESISTANT STEEL.

ALL FIRE HYDRANTS AND VALVE BOXES SHALL BE SECURELY BRACED WHEN SET AND BACKFILLED. ALL FIRE HYDRANTS, VALVES, VALVE BOXES AND FITTINGS SHALL MEET THE LATEST STANDARD SPECIFICATIONS FOR CONSTRUCTING WATER MAINS AND APPURTENANCES OF THE CLEVELAND WATER DEPARTMENT.

NOTE:
SEE TYPICAL NEW HYDRANT INSTALLATION STD-H09, STD-H10 OR STD-H11

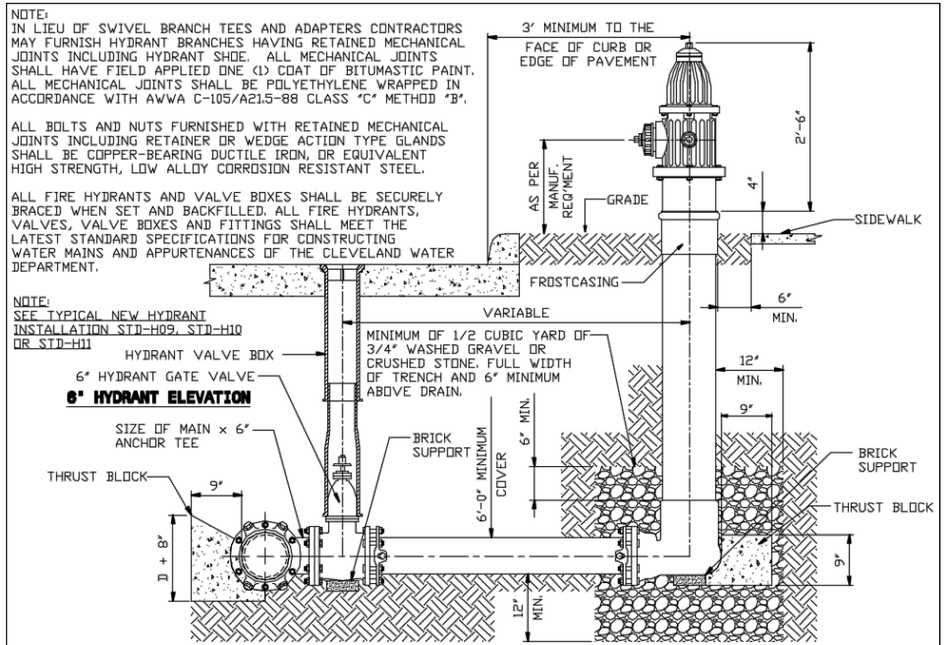

STD-H13 | DATE: 2-23-2005 | BY: RSK

CALCULATED SAF CHECKED JTP

WATER WORK DETAILS

CUY - OLD ROCKSIDE ROAD

69
157

P:\PR57030\Cadd\Sheets\ORR_91563_UD002.dwg 02-Sep-21 6:41 PM

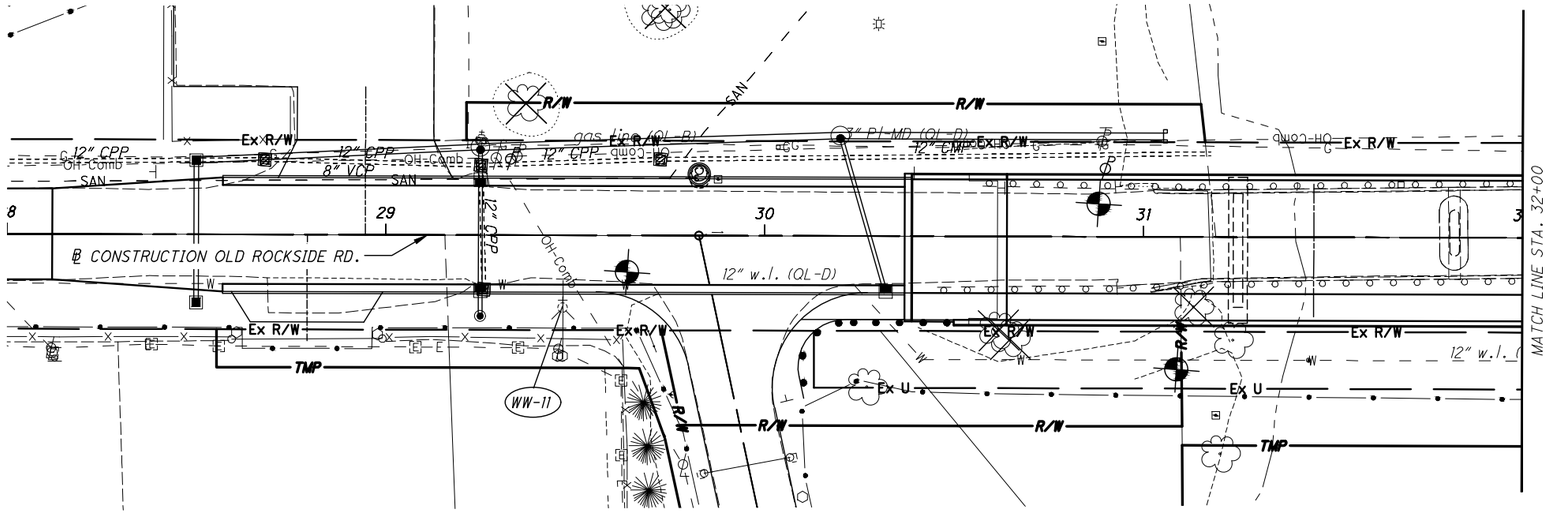

NOTE:
SEE SHEET 47 FOR DRAINAGE
STRUCTURE CALL-OUTS

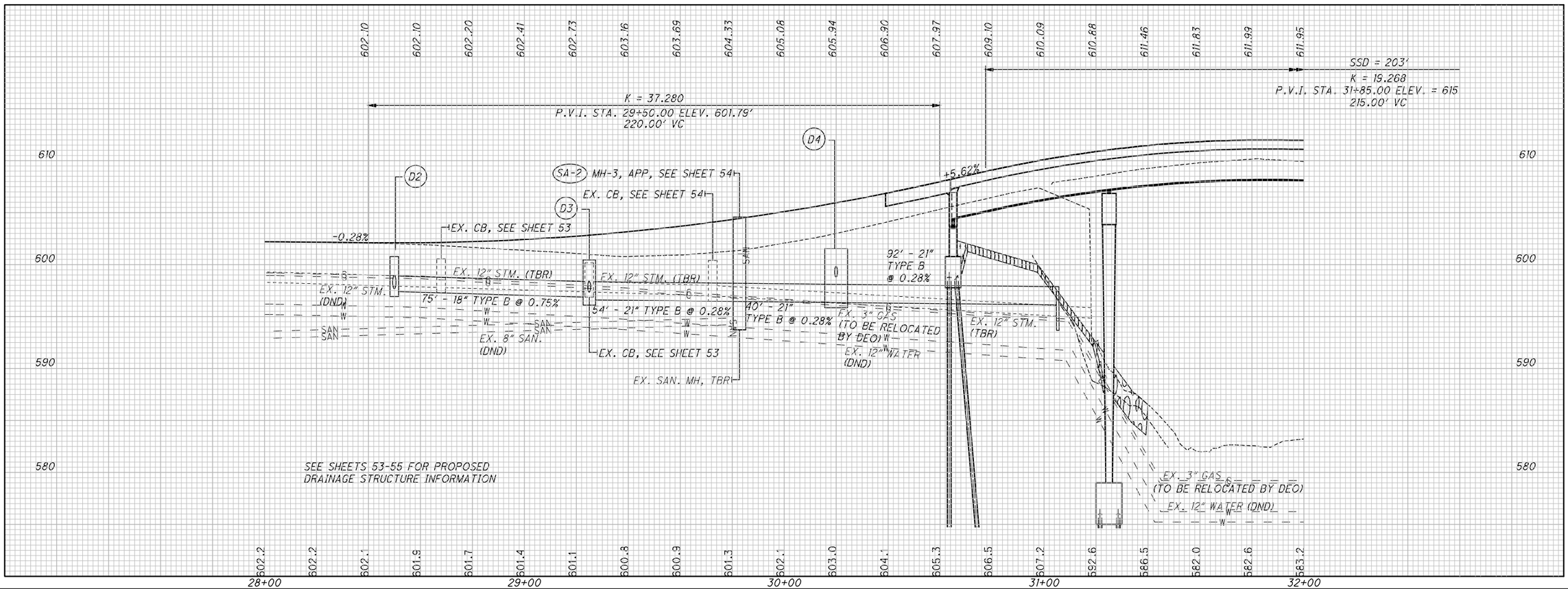

HORIZONTAL SCALE IN FEET
0 10 20 40

CALCULATED SAF
CHECKED JTP

WATER WORK PLAN AND PROFILE
STA. 28+00 TO 32+00

CUY - OLD ROCKSIDE ROAD

70
157

P:\PR57030\Cadd\Sheets\ORR_91563_UP002.dwg 02-Sep-21 6:42 PM

WATER APPURTENANCE SCHEDULE			
STATION	OFFSET	STREET	DESCRIPTION
32+69.00	32.50' RT	OLD ROCKSIDE RD.	12" INSERTING VALVE AND VALVE BOX
33+15.00	32.50' RT	OLD ROCKSIDE RD.	12" INSERTING VALVE AND VALVE BOX
34+04.00	32.50' RT	OLD ROCKSIDE RD.	12" 45° BEND
34+18.50	23.50' RT	OLD ROCKSIDE RD.	6" HYDRANT ASSEMBLY
34+32.27	21.23' LT	OLD ROCKSIDE RD.	6" HYDRANT ASSEMBLY
34+56.43	19.93' LT	OLD ROCKSIDE RD.	12" 45° BEND
35+35.24	19.84' LT	OLD ROCKSIDE RD.	12" GATE VALVE

NOTES:
1. CONTRACTOR SHALL INSTALL HYDRANTS WW-9 AND WW-10 SUCH THAT THE NOZZLES ARE WITHIN THE RIGHT OF WAY AND DO NOT ENCROACH ON THE SIDEWALK

2.SEE SHEET 50 FOR DRAINAGE STRUCTURE CALL-OUTS

*SEQUENCE OF CONSTRUCTION NOTE:
HYDRANT TO BE SET DURING PHASE 3

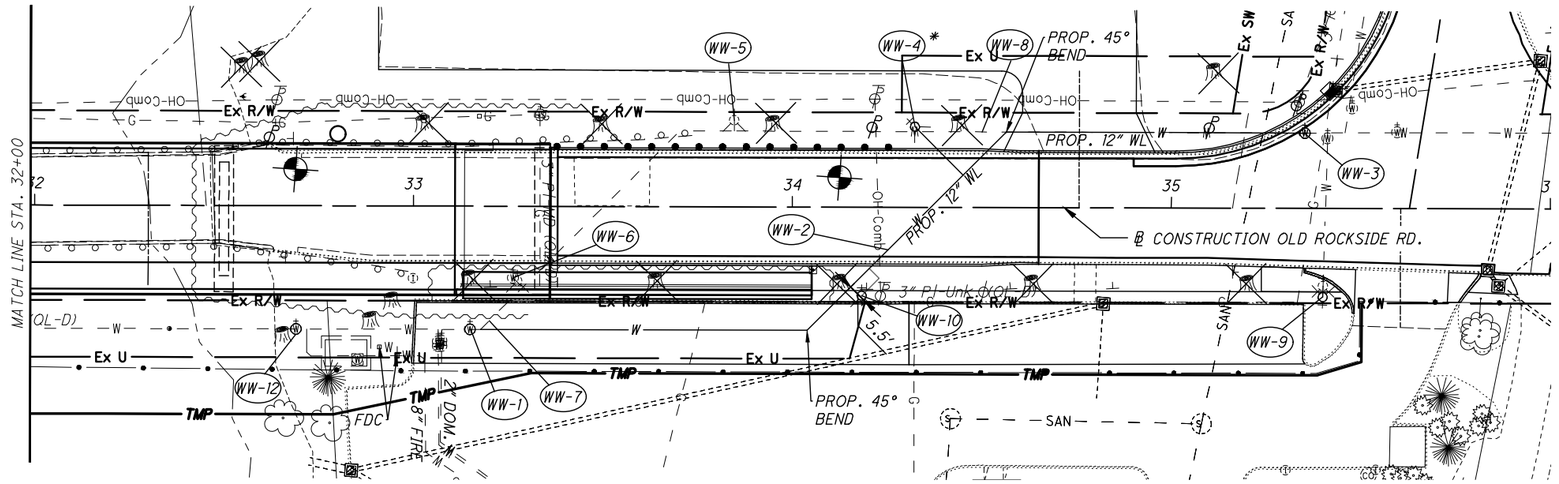

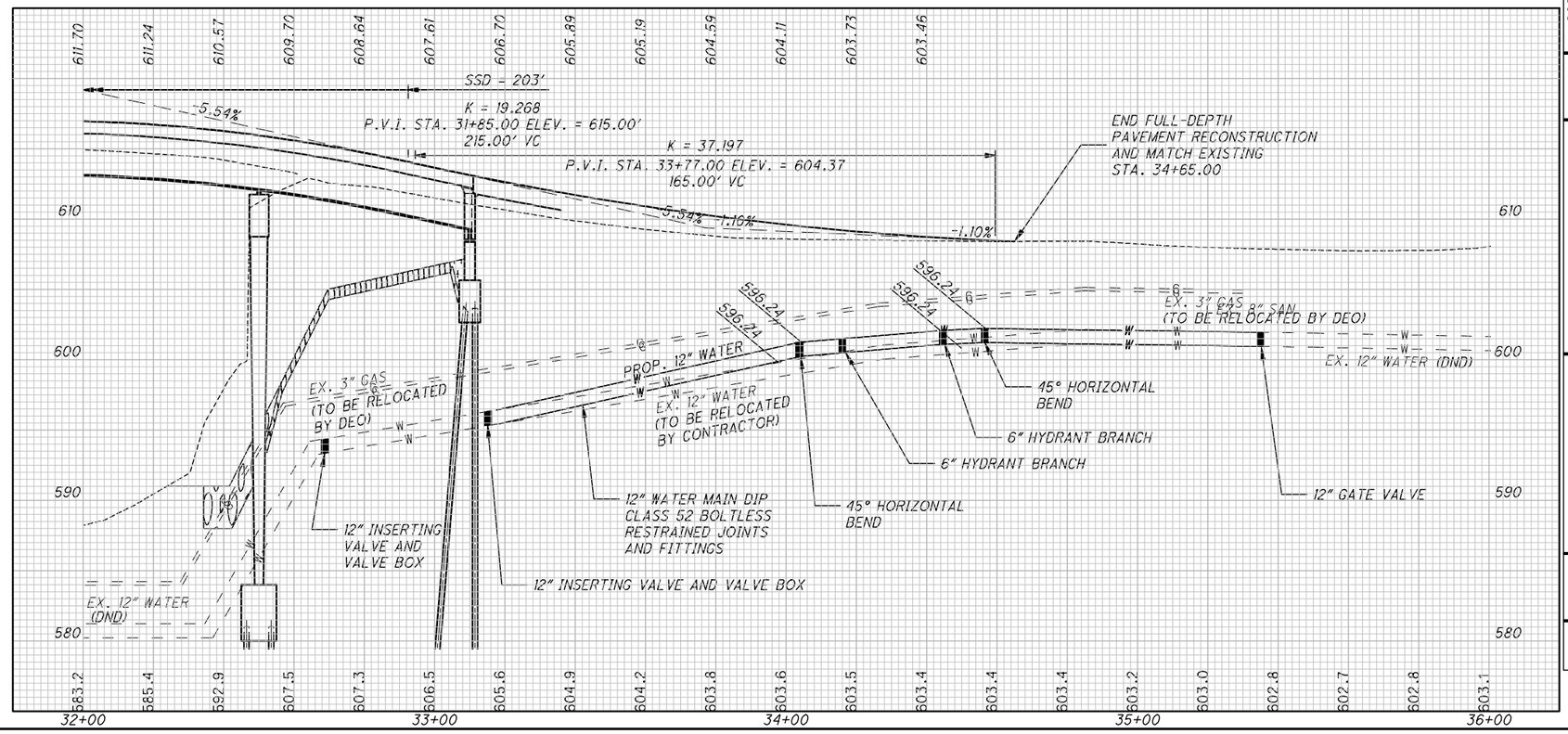

SHEET NO.	REFERENCE NO.	LOCATION	STATION FROM	STATION TO	SIDE	202 VALVE BOX REMOVED	638 12" INSERTING VALVE AND VALVE BOX	638 12" GATE VALVE	638 FIRE HYDRANT EXTENDED AND ADJUSTED TO GRADE	638 FIRE HYDRANT ADJUSTED TO GRADE	638 FIRE HYDRANT REMOVED AND DISPOSED OF	638 SPECIAL - 12" WATER MAIN DIP CLASS 52 BOLTLESS RESTRAINED JOINTS AND FITTINGS	638 SPECIAL - 6" FIRE HYDRANT FURNISHING AND SETTING, COMPLETE	638 SPECIAL - CUT AND PLUG EXISTING 12" WATER LINE
						EACH	EACH	EACH	EACH	EACH	EACH	FT	EACH	EACH
71	WW-1	OLD ROCKSIDE ROAD	33+15.00		RT.		1					240		
71	WW-2	OLD ROCKSIDE ROAD	33+17.78	35+35.28	LT./RT.			1			1		1	
71	WW-3	OLD ROCKSIDE ROAD	35+35.28		LT.	1				1				
71	WW-4	OLD ROCKSIDE ROAD	34+32.17		LT.						1			
71	WW-5	OLD ROCKSIDE ROAD	33+84.60		LT.									1
71	WW-6	OLD ROCKSIDE ROAD	33+27.48		RT.				1	1				
71	WW-7	OLD ROCKSIDE ROAD	33+20.00		RT.									
71	WW-8	OLD ROCKSIDE ROAD	34+50.00		LT.									
71	WW-9	OLD ROCKSIDE ROAD	35+40.00		23.5' RT.									
71	WW-10	OLD ROCKSIDE ROAD	34+15.50		RT.									
70	WW-11	OLD ROCKSIDE ROAD	29+46.84		LT.									
71	WW-12	OLD ROCKSIDE ROAD	32+69.00		RT.									
		TOTALS CARRIED TO GENERAL SUMMARY				1	2	1	1	1	2	240	2	2

HORIZONTAL SCALE IN FEET
0 10 20 40

CALCULATED SAF
CHECKED JTP

WATER WORK PLAN AND PROFILE
STA. 32+00 TO 36+00
CUY - OLD ROCKSIDE ROAD

71
157

P:\PR57030\Cadd\Sheets\ORR_91563_UP001.dwg 02-Sep-21 6:44 PM

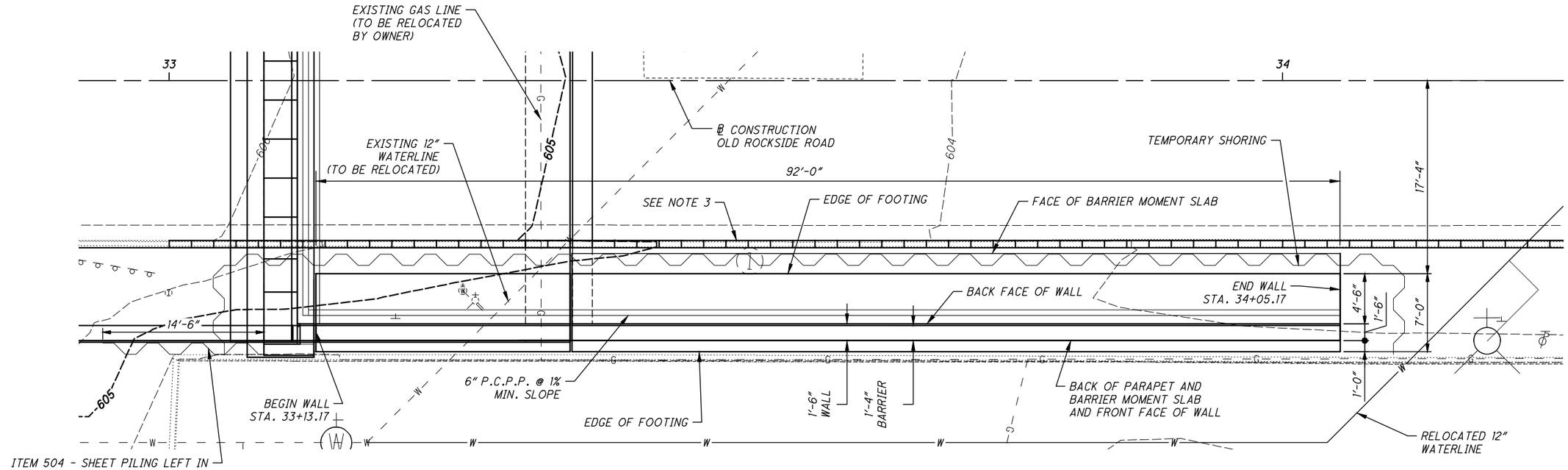

NOTES:

1. SEE BRIDGE 00.42 SHEETS 41/44 AND 42/44 FOR APPROACH SLAB DETAILS.
2. SEE SHEETS 7/9 AND 8/9 FOR BARRIER MOMENT SLAB AND RAILING DETAILS.
3. PORTABLE BARRIER PER PCB-91 FROM STA. 33+00.00 TO STA. 34+50.00. SEE SHEET 2/9 FOR NOTES AND SEE ROADWAY PLANS FOR PAYMENT.
4. THE PROFILE OF THE TOP OF THE WALL IS RELATIVE TO THE ROADWAY PROFILE. THE BARRIER MOMENT SLAB VARIES FROM 1'-2" THICK TO 1'-0" THICK FROM STA. 33+38.00 TO STA. 33+48.00 AND THIS CHANGE IS REFLECTED IN THE TOP OF WALL ELEVATIONS GIVEN AT THOSE LOCATIONS.
5. ELEVATIONS GIVEN ARE FOR THE TOP OF RETAINING WALL UNLESS NOTED OTHERWISE.

DESIGN AGENCY
BURGESS & NIPLE
100 WEST ERIE STREET
PAINESVILLE, OHIO 44077

DESIGNED	DRAWN	REVIEWED	DATE
KMA	WTB	DWL	09/2021
CHECKED	REVISED		STRUCTURE FILE NUMBER
MAB			

RETAINING WALL PLAN & ELEVATION

REINFORCED CONCRETE RETAINING WALL
STA. 33+13.17 TO STA. 34+05.17

CUY - OLD ROCKSIDE ROAD

P:\PR57030\Cadd\Sheets\ORR_91563_WP001.dwg 02-Sep-21 6:50 PM

REFER TO THE FOLLOWING ODOT STANDARD BRIDGE DRAWINGS:

BR-2-15 DATED 07-17-15

AND TO THE FOLLOWING ODOT SUPPLEMENTAL SPECIFICATIONS:

800 DATED 04-17-20

AND TO THE FOLLOWING CUYAHOGA COUNTY DEPARTMENT OF PUBLIC WORKS STANDARD BRIDGE DRAWINGS:

BR-2-15C REVISED 12-07-16
CP-1C REVISED 2-13-13
PRF-1C REVISED 2-8-12

SPECIFICATIONS AND STANDARD CONSTRUCTION DRAWINGS:

THE STATE OF OHIO DEPARTMENT OF TRANSPORTATION, CONSTRUCTION AND MATERIALS SPECIFICATIONS, DATED JANUARY 1, 2020, AND THE NOTED STANDARD CONSTRUCTION DRAWINGS SHALL GOVERN THIS IMPROVEMENT. WHEREVER THE WORD "STATE" OCCURS, IT IS TO MEAN CUYAHOGA COUNTY. WHEREVER THE WORD "DEPARTMENT" OCCURS, IT IS TO MEAN THE BOARD OF COUNTY COMMISSIONERS OF CUYAHOGA COUNTY, OHIO, AND WHEREVER THE WORD "DIRECTOR" OCCURS, IT IS TO MEAN COUNTY ENGINEER, AND/OR THEIR DESIGNATED REPRESENTATIVE, LIMITED TO THE PARTICULAR DUTIES ENTRUSTED TO THEM.

DESIGN SPECIFICATIONS:

THIS STRUCTURE CONFORMS TO THE 8TH EDITION OF THE "LRFD BRIDGE DESIGN SPECIFICATIONS" ADOPTED BY THE AMERICAN ASSOCIATION OF STATE HIGHWAY AND TRANSPORTATION OFFICIALS, 2017, THE ODOT BRIDGE DESIGN MANUAL, 2020, AND THE CURRENT CUYAHOGA COUNTY DEPARTMENT OF PUBLIC WORKS' SUPPLEMENT THERETO.

OPERATIONAL IMPORTANCE:

A LOAD MODIFIER OF 1.0 HAS BEEN ASSUMED FOR THE DESIGN OF THIS STRUCTURE IN ACCORDANCE WITH THE AASHTO LRFD BRIDGE DESIGN SPECIFICATIONS, ARTICLE 1.3.5 AND THE ODOT BRIDGE DESIGN MANUAL, 2020.

DESIGN LOADING:

AASHTO TRAFFIC RAILING LOADING
LIVE LOAD SURCHARGE = 2 FEET

DESIGN DATA:

CONCRETE CLASS QC1 - COMPRESSIVE STRENGTH 4000 PSI
CONCRETE CLASS QC2 - COMPRESSIVE STRENGTH 4500 PSI

REINFORCING STEEL - MINIMUM YIELD STRENGTH 60,000 PSI

MAINTENANCE OF TRAFFIC:

SEE THE ROADWAY PLANS FOR MAINTENANCE OF TRAFFIC REQUIREMENTS.

UTILITY LINES:

THE ULTILITY(IES) EXCEPT CLEVELAND WATER SHALL BEAR ALL EXPENSE INVOLVED IN RELOCATING OR INSTALLING THE AFFECTED UTILITY LINES. THE CONTRACTOR AND UTILITY(IES) ARE TO COOPERATE BY ARRANGING THEIR WORK IN SUCH A MANNER THAT INCONVENIENCES TO EITHER WILL BE HELD TO A MINIMUM.

LIMITATIONS OF OPERATIONS:

THE CONTRACTOR'S ACTIVITIES AND WORK SCHEDULE SHALL BE CONSTRAINED BY THE FOLLOWING SPECIAL LIMITATIONS:

1. ENVIRONMENTAL COMMITMENTS (SEE ROADWAY PLANS).
2. CONCRETE SHALL BE IN PLACE AT LEAST 30 DAYS PRIOR TO SEALING.
3. NO EQUIPMENT OR MATERIALS WILL BE STORED ON PARK PROPERTY

SPREAD FOOTING FOUNDATIONS

RETAINING WALL FOOTINGS, AS DESIGNED, PRODUCE A MAXIMUM SERVICE LIMIT STATE BEARING PRESSURE OF 1.23 KIPS PER SQUARE FOOT AND A MAXIMUM STRENGTH LIMIT STATE BEARING PRESSURE OF 2.58 KIPS PER SQUARE FOOT. THE FACTORED BEARING RESISTANCE IS 2.627 KIPS PER SQUARE FOOT.

PROJECT SEQUENCE OF CONSTRUCTION:

SEE MOT NOTES IN ROADWAY PLANS ESPECIALLY PRE-PHASE 1A ON SHEET 14.

RETAINING WALL SEQUENCE OF CONSTRUCTION

1. AFTER RELOCATING THE WATERLINE, REMOVE THE SOUTH CONCRETE CURB AND GUTTER FROM STA. 33+00 TO STA. 34+10 USING FLAGGER CLOSURES.

2. BACKFILL WITH COMPACTED ITEM 304 AGGREGATE BASE TO THE ROAD SURFACE.

3. INSTALL PORTABLE BARRIER FROM STA. 33+00 TO STA. 34+50 AT 12 FEET RT FROM BASELINE OF OLD ROCKSIDE ROAD.

4. INSTALL TEMPORARY SHORING ALONG THE PORTABLE BARRIER.

5. CONSTRUCT THE RETAINING WALL.

6. BACKFILL TO THE BOTTOMS OF THE APPROACH SLAB AND BARRIER MOMENT SLAB AND REMOVE THE TEMPORARY SHORING.

7. COMPLETE PRE-PHASE 1A RESTORATION WORK. SEE ROADWAY SHEET 14/157 FOR SEQUENCE OF CONSTRUCTION.

8. PROCEED TO PHASE 1A. SEE ROADWAY SHEET 14/157 FOR SEQUENCE OF CONSTRUCTION.

ITEM 503 - UNCLASSIFIED EXCAVATION, AS PER PLAN:

UNCLASSIFIED EXCAVATION SHALL BE IN ACCORDANCE WITH CMS ITEM 503 EXCEPT THAT THE BACKFILL MATERIAL SHALL BE MATERIAL CONFORMING TO CMS 703.17 (CMS 304 MATERIAL) AND MEET THE COMPACTION REQUIREMENTS OF CMS 304.05. IN ADDITION, THE BACKFILL MATERIAL SHALL BE PLACED AND COMPACTED IN 6" LIFTS.

ITEM 509 - EPOXY COATED REINFORCING STEEL, AS PER PLAN

IN ADDITION TO THE PROVISIONS OF ITEM 509, FIELD BEND AND/OR FIELD CUT THE REINFORCING STEEL DESIGNATED IN THE PLANS, AS NECESSARY, IN ORDER TO MAINTAIN THE REQUIRED CLEARANCES AND BAR SPACINGS. REPAIR ALL DAMAGE TO THE EPOXY COATING, AS A RESULT OF THIS WORK, ACCORDING TO 709.00.

ITEM 511 - CLASS QC1 CONCRETE WITH QC/QA, RETAINING/WINGWALL INCLUDING FOOTING, AS PER PLAN:

ITEM 511 - CLASS QC2 CONCRETE, MISC.: MOMENT SLAB WITH QC/QA, AS PER PLAN:

ALL COARSE AGGREGATE SHALL HAVE AN ABSORPTION OF 1.00% OR GREATER AS DEFINED BY ASTM C127.

BASIS OF PAYMENT: PAYMENT FOR THE ABOVE COMPLETED AND ACCEPTED QUANTITIES WILL BE MADE AT THE CONTRACT ID PRICE FOR:

ITEM	UNITS	DESCRIPTION
511	CU YD	CLASS QC1 CONCRETE WITH QC/QA, RETAINING/WINGWALL INCLUDING FOOTING, AS PER PLAN
511	CU YD	CLASS QC2 CONCRETE WITH QC/QA, MOMENT SLAB, AS PER PLAN

ITEM 511 - CONCRETE, MISC.: ARCHITECTURAL TREATMENT

A. GENERAL

THE WORK TO BE DONE UNDER THIS ITEM SHALL INCLUDE THE CONSTRUCTION OF TEXTURED AND COLORED CONCRETE SURFACES USING FORM LINERS AND A COLOR STAIN SYSTEM DESIGNED TO DUPLICATE CLOSELY THE APPEARANCE OF NATURAL STONE.

THE MANUFACTURER(S) OF THE FORM LINER AND COLOR STAIN SYSTEM SHALL HAVE FIVE (5) YEARS EXPERIENCE MAKING FORM LINERS AND COLOR STAINS TO MATCH NATURAL STONE SHAPES, SURFACE TEXTURES AND COLORS. THE PATTERN AND COLORING SHALL FOLLOW THE MANUFACTURER"S STANDARD DETAILS AND SPECIFICATIONS FOR THE CHOSEN DESIGN. THE CONTRACTOR SHALL HAVE A MINIMUM OF FIVE (5) YEARS EXPERIENCE WITH CONSTRUCTING VERTICALLY FORMED ARCHITECTURAL CONCRETE AND SHALL BE TRAINED IN THE MANUFACTURER"S SPECIAL TECHNIQUES IN ORDER TO ACHIEVE THE DESIRED CONCRETE APPEARANCE.

THE FORM LINER PATTERN TO BE USED ON THE PARAPETS SHALL BE "RUSTIC ASHLAR #11003" AS MANUFACTURED BY CUSTOM ROCK INTERNATIONAL, INCRETE SYSTEMS, WWW.INCRETE.COM, GREENSTREAK, WWW.GREENSTREAK.COM, OR APPROVED EQUAL. THE LOCAL REPRESENTATIVE FOR CUSTOM ROCK INTERNATIONAL IS BOMANITE DESIGNS, INC., 6001 PINECONE DRIVE, MENTOR, OHIO 44060, PH: (440) 350-3900. THE ARCHITECTURAL RELIEF SHALL NOT EXCEED 2". THERE SHALL BE A 4" SIMULATED SANDSTONE OR CONCRETE CAP ON ALL THE PARAPETS AS DETAILED IN THE PLANS.

THE FORM LINER PATTERN TO BE USED ON THE RETAINING WALL SHALL BE "GEORGIA ASHLAR #16999" AS MANUFACTURED BY FITZGERALD FORMLINERS 1500 E. CHESTNUT AVENUE, SANTA ANA, CALIFORNIA, 92701, PH: (800) 547-7760, INCRETE SYSTEMS, WWW.INCRETE.COM, GREENSTREAK, WWW.GREENSTREAK.COM, OR APPROVED EQUAL. THE PART (PATTERN) SIZE SHALL BE 72"WX24"H. THE ARCHITECTURAL RELIEF SHALL NOT EXCEED 2".

B. PRODUCTS

FORM LINERS SHALL BE REUSABLE, MADE OF HIGH STRENGTH URETHANE AND BE EASILY ATTACHABLE TO CONCRETE FORMS. THEY SHALL NOT COMPRESS MORE THAN ONE-QUARTER INCH (1/4") WHEN CONCRETE IS POURED AT A RATE OF TEN VERTICAL FEET (10'-0") PER HOUR. FORM LINERS SHALL BE REMOVABLE WITHOUT CAUSING DETERIORATION OF THE CONCRETE SURFACE OR ANY UNDERLINING CONCRETE. USE A RELEASE AGENT THAT IS COMPATIBLE WITH THE FORM LINER AND WITH THE COLOR STAIN SYSTEM TO BE APPLIED TO THE CONCRETE SURFACES AND PROVIDE THE ENGINEER WITH THE MANUFACTURER'S SPECIFICATIONS FOR PRODUCT APPLICATION.

METAL OR FIBERGLASS FORM TIES SHALL BE USED. FORM TIES SHALL BE DESIGNED TO SEPARATE A MINIMUM OF ONE INCH (1") BACK FROM THE FINISHED SURFACE LEAVING ONLY A NEAT HOLE THAT CAN BE PLUGGED WITH PATCHING MATERIAL. A SAMPLE AND/OR DESCRIPTION OF THE FORM TIE SHOWING ITS METHOD OF SEPARATION WHEN FORMS ARE REMOVED SHALL BE SUPPLIED TO THE ENGINEER FOR APPROVAL PRIOR TO USE.

THE COLOR STAIN MIX SHALL BE AN ACRYLIC RESIN-BASED OR ACID-BASED STAIN FORMULATED TO PENETRATE FINISHED CONCRETE SURFACES. UNLESS OTHERWISE SPECIFIED IN THE PLAN DETAILS, THE COLOR(S) NEEDED SHALL BE THOSE REQUIRED TO ACHIEVE A NATURAL STONE COLOR VARIATION IN THE FINISHED CONCRETE TO COMPLEMENT THE SITE AND ITS SURROUNDINGS. THESE COLORS WOULD TYPICALLY INCLUDE A RANGE OF BROWNS, TANS, BUFFS, GRAYS, WHITES AND BLACKS.

THE STAIN MIX SHALL CREATE A SURFACE FINISH THAT IS BREATHABLE (WILL ALLOW WATER VAPOR TRANSMISSION) AND THAT RESISTS DETERIORATION FROM WATER, ACID, ALKALI, FUNGI AND SUNLIGHT (UV). IT SHALL ALSO MEET MILDEW RESISTANCE REQUIREMENTS IN ACCORDANCE WITH FEDERAL TEST METHOD STD. 141, METHOD 6271.2, AND REQUIREMENTS FOR WEATHERING RESISTANCE OF A MINIMUM OF 1000 HOURS ACCELERATED EXPOSURE MEASURED IN ACCORDANCE WITH ASTM G152, G153, G154 OR G155.

THE MANUFACTURER OF THE COLOR STAIN SHALL ALSO SUPPLY OR RECOMMEND A COMPATIBLE CLEAR SEALER TO BE APPLIED TO ALL TEXTURED AND COLOR STAINED CONCRETE SURFACES. THE ENGINEER SHALL BE PROVIDED WITH THE MANUFACTURER'S SPECIFICATIONS FOR APPLYING THE STAIN AND CLEAR SEALER.

C. SHOP DRAWINGS AND MOCKUPS

IT SHALL BE UNDERSTOOD THAT ANY ARCHITECTURAL TREATMENT(S) GRAPHICALLY SHOWN THROUGHOUT THE PLAN DETAILS ARE FOR ILLUSTRATIVE PURPOSES ONLY AND MAY NOT REPRESENT THE ACTUAL PATTERN LAYOUT, SCALE, ETC. OF THE FINISHED WORK. PRIOR TO BEGINNING ANY WORK, THE CONTRACTOR SHALL BE RESPONSIBLE FOR SUBMITTING REPRESENTATIVE SHOP DRAWINGS SCALED SUFFICIENTLY ENOUGH TO DETAIL THE LAYOUT OF THE FINISHED PATTERN AND JOINT LOCATIONS, FORM TIE LOCATIONS, AREAS OF FORM LINER TERMINATION INCLUDING PLACEMENT OF POLYSTYRENE FOAM FILLER MATERIAL BETWEEN FORMWORK AND STRUCTURAL CONCRETE SURFACES, END, EDGE, CORNER AND OTHER SPECIAL CONDITIONS TO THE ENGINEER FOR ACCEPTANCE. A PREINSTALLATION MEETING SHALL BE SCHEDULED WITH THE ENGINEER, CONTRACTOR AND MANUFACTURER"S REPRESENTATIVE TO ASSURE THE UNDERSTANDING OF FORM LINER USE, POLYSTYRENE FOAM USE, COLOR APPLICATION, REQUIREMENTS FOR CONSTRUCTING THE MOCKUPS AND COORDINATION OF THE WORK.

ONCE THE REPRESENTATIVE SHOP DRAWINGS HAVE BEEN ACCEPTED, THE CONTRACTOR SHALL CONSTRUCT A MINIMUM OF TWO (2) MOCKUPS ON SITE BEFORE ANY PERMANENT ARCHITECTURAL TREATMENT IS ADDED TO THE STRUCTURE. THE MOCKUPS MUST UTILIZE THE SAME MATERIALS, METHODS AND WORK FORCE THAT WILL BE USED FOR THE PROJECT. THE ENGINEER, MUNICIPALITY AND/OR THE STAKEHOLDERS MAY DETERMINE ANY SPECIFIC REQUIREMENTS, LOCATION OR SPECIAL CONSIDERATIONS TO BE INCORPORATED IN THE MOCKUPS. THE MOCKUPS MUST DEMONSTRATE THE FOLLOWING:

1. BE OF SUFFICIENT SIZE TO ADEQUATELY SHOW THE SELECTED PATTERN, TEXTURE AND COLORATION.

2. FORM LINER BUTT JOINTS AND, IF APPROPRIATE, CONTINUATION OF THE PATTERN THROUGH AN EXPANSION JOINT.

3. CONTINUATION OF THE PATTERN AND TEXTURE AROUND CORNERS OF ADJOINING SURFACES.

4. APPLICATION OF THE COLOR STAIN AND CLEAR SEALER. ALL CONCRETE WORK MUST BE COMPLETED AND CURED FOR A MINIMUM OF 28 DAYS BEFORE THE STAIN IS APPLIED.

AFTER THE TEXTURE AND COLORING ARE COMPLETE, THE MUNICIPALITY, STAKEHOLDERS AND THE ENGINEER SHALL EVALUATE THE MOCKUPS. THEY MAY REQUEST CHANGES OF COLOR, APPLICATION TECHNIQUE, ETC. IF NOT COMPLETELY SATISFIED WITH WHAT IS PRESENTED. ONCE SATISFIED, THEY SHALL CHOOSE WHICH MOCKUP WILL SERVE AS THE QUALITY CONTROL STANDARD FOR THE PROJECT. DISPOSE OF ALL MOCKUPS AFTER COMPLETION OF THE PROJECT.

DESIGN AGENCY
BURGESS & NIPLE
100 WEST ERIE STREET
PAINESVILLE, OHIO 44077

DESIGNED	DRAWN	REVIEWED	DATE
RMP	RMP	DWL	09/2021
CHECKED	REVISED	STRUCTURE FILE NUMBER	
MAB			

RETAINING WALL NOTES 1 OF 2
REINFORCED CONCRETE RETAINING WALL
STA. 33+13.17 TO STA. 34+05.17

CUY - OLD ROCKSIDE ROAD

P:\PR57030\Cadd\Sheets\ORR_91563_WN001.dwg 14-Sep-21 2:55 PM

D. CONSTRUCTION

SCHEDULE COLOR STAIN APPLICATION AFTER ADJACENT EARTHWORK IS COMPLETED TO AVOID CONTAMINATING OR DAMAGING THE CONCRETE SURFACES. DELAY ADJACENT PLANTINGS UNTIL COLOR STAIN AND CLEAR SEALER APPLICATIONS HAVE BEEN COMPLETED AND CURED. COORDINATE ALL WORK TO PERMIT COLORING AND SEALING WITHOUT INTERFERENCE FROM OTHER TRADES.

PREPARE THE FORM LINERS BY CLEANING AND REMOVING ALL BUILD-UP AND FOREIGN MATTER PRIOR TO EACH CONCRETE POUR. THE FORM LINERS SHALL BE INSPECTED FOR ANY BLEMISHES OR TEARS. REPAIR ANY SUCH DEFECTS PER MANUFACTURER'S RECOMMENDATIONS. REPLACE ANY FORM LINER IF, AFTER BEING REPAIRED, IT YIELDS A CONCRETE TEXTURE THAT IS INCONSISTENT WITH THE APPROVED MOCKUP. REPLACE ANY FORM LINER THAT CANNOT BE REPAIRED AT NO ADDITIONAL COST TO THE PROJECT.

PLACE ADJACENT FORM LINERS WITH LESS THAN ONE-QUARTER INCH (1/4") SEPARATION BETWEEN EACH LINER WHILE MAINTAINING THE CONTINUITY OF THE FORMED PATTERN. WHERE THE PATTERN IS TO CONTINUE AROUND ADJOINING SIDES OF THE PARAPET, WALL, ETC., CAREFULLY ALIGN THE MORTAR JOINTS AND RUSTICATIONS ON EACH SIDE AND PROVIDE AS MUCH RELIEF AS POSSIBLE TO ACHIEVE A REALISTIC APPEARANCE OF THE FINISHED SURFACES. SECURELY ATTACH LINERS TO FORMWORK AS PER THE MANUFACTURER'S RECOMMENDATIONS. APPLY A FORM LINER RELEASE AGENT PER THE MANUFACTURER'S RECOMMENDATIONS. PLACE FORM TIES AT THE THINNEST POINTS OF THE FORM LINER (HIGH POINTS OF THE FINISHED SURFACE).

FOR CONCRETE SURFACE AREAS THAT DO NOT REQUIRE FORM LINER TREATMENT (E.G. NON-VISIBLE SURFACES BELOW FINAL GRADE), THE VOID BETWEEN THE STRUCTURAL CONCRETE SURFACES AND THE FORMWORK DUE TO THE DISCONTINUED USE OF THE FORM LINERS SHOULD BE FILLED WITH A POLYSTYRENE FOAM MATERIAL (E.G. STYROFOAM) EQUAL IN THICKNESS TO THE FORM LINER BEING USED. SHOULD THE CONTRACTOR CHOOSE NOT TO USE A FILLER MATERIAL IN THESE AREAS, FAVORING INSTEAD TO ALLOW POURED CONCRETE TO FILL THE VOIDS, THE QUANTITY OF CONCRETE USED FOR THIS PURPOSE WILL BE CONSIDERED INCIDENTAL TO WHAT IS REQUIRED TO ACHIEVE THE DESIRED AESTHETIC TREATMENT AND SHALL NOT WARRANT ADDITIONAL COMPENSATION BEYOND THE UNIT PRICE BID FOR THIS ITEM OF WORK.

FORM STRIPPING AND RELATED CONSTRUCTION SHALL AVOID CREATING DEFECTS IN THE FINISHED CONCRETE SURFACES. WHERE FORM LINERS ABUT, CAREFULLY BLEND THE CONCRETE TO MATCH THE BALANCE OF THE PATTERN, AVOIDING VISIBLE SEAMS, FORM MARKS AND ROUGH EDGES. NEATLY PATCH ALL SURFACE VOIDS AND THE HOLES REMAINING AFTER DISENGAGING THE PROTRUDING PORTION OF THE FORM TIES SO THAT THEY WILL NOT BE VISIBLE AFTER COLORING THE CONCRETE SURFACE.

WHERE AN EXPANSION JOINT MUST OCCUR AT A POINT OTHER THAN AT A MORTAR JOINT OR SIMILAR RUSTICATION, SUCH AS AT THE FACE OF CONCRETE TEXTURE THAT IS TO HAVE THE APPEARANCE OF STONE, THE CONTRACTOR SHALL CONTACT THE MANUFACTURER FOR THE PROPER TREATMENT OF THE EXPANSION MATERIAL.

CLEAN SURFACE PRIOR TO APPLYING THE COLOR STAIN TO ASSURE THAT THE SURFACE IS FREE OF LATENCE, DIRT, DUST, GREASE, EFFLORESCENCE, PAINT, OR FOREIGN MATERIAL FOLLOWING THE MANUFACTURER'S INSTRUCTIONS FOR SURFACE PREPARATION. THE PREFERRED METHOD TO REMOVE LAITANCE IS PRESSURE WASHING WITH CLEAN WATER AT A MINIMUM OF 3000 PSI USING A FAN NOZZLE PERPENDICULAR TO AND AT A DISTANCE OF 12"-24" FROM THE CONCRETE SURFACE. THE COMPLETED SURFACE SHALL BE FREE OF BLEMISHES, DISCOLORATION AND UNNATURAL FORM MARKS. SANDBLASTING IS PROHIBITED. ETCHING IS NOT REQUIRED. IF THE CONCRETE SURFACE BECOMES SOILED AFTER ITS INITIAL CLEANING AND PRIOR TO RECEIVING STAIN, OR IF THE COLOR STAIN SYSTEM HAS NOT BEEN APPLIED TO THE CONCRETE SURFACE WITHIN 14 DAYS AFTER ITS INITIAL CLEANING, THE CONCRETE SURFACE SHALL AGAIN BE CLEANED TO THE ENGINEER'S SATISFACTION PRIOR TO APPLYING THE STAIN.

THE COLOR STAIN SYSTEM AND CLEAR SEALER SHALL BE APPLIED PER THE MANUFACTURER'S SPECIFICATIONS FOR EACH PRODUCT. APPLY THE PRODUCTS IN DRY WEATHER CONDITIONS WHEN THE AMBIENT AIR TEMPERATURE IS BETWEEN 50°F AND 90°F. SHOULD WEATHER CONDITIONS DIFFER FROM THESE REQUIREMENTS OR FROM THE MANUFACTURER'S SPECIFICATIONS, CONSULT THE MANUFACTURER FOR PROPER APPLICATION RECOMMENDATIONS.

USE THE COLORS AND APPLICATION TECHNIQUES AS APPROVED FOR THE FINAL MOCKUP. THE DESIRED FINISH COLOR EFFECT SHALL BE ACHIEVED BY APPLYING ONE COLOR, ONE COLOR OVER ANOTHER OR BY INTER-MIXING SEVERAL COLORS OF STAIN, AS PER MANUFACTURER'S SPECIFICATIONS. GROUT PATTERN JOINTS SHALL DISPLAY A UNIFORM COLOR AND APPEARANCE OF MORTARED JOINTS.

TEMPORARILY COVER THE COMPLETED WORK WHERE EXPOSED SOIL OR PAVEMENT MAY SPLATTER DIRT OR SOIL FROM RAINFALL, OR WHERE THE SURFACES MAY RECEIVE OVERSPRAY FROM OTHER PROCESSES, UNTIL THE STAIN AND SEALER HAVE CURED.

PROVIDE THE ENGINEER WITH PRODUCT DATA SHEETS AND SAMPLES OF ALL COLOR STAINS AND THE CLEAR SEALER USED TO PRODUCE THE FINISHED COLOR EFFECT. ALL SAMPLES SHALL BE IN THEIR ORIGINAL CONTAINERS IF POSSIBLE.

E. PAYMENT

PAYMENT FOR ALL WORK DESCRIBED HEREIN, INCLUDING ANY ADDITIONAL CONCRETE NEEDED TO CREATE THE FORMLINED AESTHETIC TREATMENT AND THAT DOES NOT CONTRIBUTE TO THE CORE DESIGN OF THE PARAPET OR WALL, ETC. TO WHICH IT IS APPLIED, SHALL BE MADE PER THE SQUARE FOOT UNIT PRICE BID FOR

ITEM 511 - CONCRETE, MISC.: ARCHITECTURAL TREATMENT

ITEM SPECIAL - SEALING: ELASTOMERIC PROTECTIVE AND DECORATIVE CONCRETE COATING

THIS ITEM SHALL CONFORM TO "ITEM SPECIAL - SEALING, ELASTOMERIC PROTECTIVE AND DECORATIVE COATING" AS CONTAINED IN "SECTION 400 PROPOSAL NOTES" OF THE CUYAHOGA COUNTY ENGINEER SPECIFICATION BOOKLET.

THE COLOR OF THE PROPOSED SEALER SHALL BE AS FOLLOWS:

BEIGE, FEDERAL STANDARD COLOR NO. 595-26555 FOR THE SIMULATED STONE PARAPET CAP AND THE OUTSIDE FACE OF THE BARRIER MOMENT SLAB/CONCRETE SIDEWALK.

THE CONTRACTOR SHALL TAKE ALL PRECAUTIONS NECESSARY TO PREVENT ELASTOMERIC SEALER, PAINT, OR OTHER MATERIAL USED TO CLEAN, SEAL, OR TREAT ANY STRUCTURE FROM ENTERING ANY STREAMS, WETLANDS OR OTHER WATERS OF THE UNITED STATES AND TAKE APPROPRIATE ACTIONS IN THE EVENT OF A RELEASE.

ITEM 512 - SEALING OF CONCRETE SURFACES (NON EPOXY)

THIS ITEM OF WORK SHALL BE USED TO SEAL SIDEWALKS. PAYMENT SHALL BE MADE AT THE CONTRACT PRICE BID FOR ITEM 512 - SEALING OF CONCRETE SURFACES (NON-EPOXY). THIS PRICE AND PAYMENT SHALL INCLUDE ALL LABOR, MATERIALS, EQUIPMENT, AND INCIDENTALS NECESSARY TO COMPLETE THE WORK TO THE SATISFACTION OF THE ENGINEER.

ITEM 516 - 1" PREFORMED EXPANSION JOINT FILLER, AS PER PLAN

SEAL ALL RETAINING WALL EXPANSION JOINTS WITH NON-SAG POLYURETHANE SEALANT CONFORMING TO ASTM C920, TYPE S. LEAVE THE BOTTOM ½" UNSEALED TO ALLOW ANY WATER WHICH MAY ENTER THE JOINT TO ESCAPE.

THIS ITEM SHALL INCLUDE, BUT IS NOT LIMITED TO THE PEJF AND JOINT SEAL NECESSARY TO FORM AND PLACE THE RETAINING WALL EXPANSION JOINTS. PAYMENT FOR THIS ITEM SHALL INCLUDE ALL OTHER NECESSARY MATERIAL, LABOR, AND EQUIPMENT AND SHALL BE INCLUDED IN THE UNIT PRICE BID PER FOOT FOR ITEM 516 - 1" PREFORMED EXPANSION JOINT FILLER, AS PER PLAN.

ITEM 517 - RAILING (CONCRETE PARAPET WITH TWIN STEEL TUBE RAILING), AS PER PLAN

CONCRETE SHALL BE ITEM 511 - CLASS QC2 CONCRETE WITH QC/QA, AS PER PLAN. THE COST OF THE LIGHTING CONDUITS, IF REQUIRED, IN THE RAILING, AND RAILING ON THE BARRIER MOMENT SLABS SHALL BE INCLUDED IN THIS ITEM.

THE STRUCTURAL STEEL RAILINGS AND RAIL POSTS SHALL NOT BE GALVANIZED OR METALIZED. INSTEAD, A THREE-COAT PAINT SYSTEM CONSISTING OF AN INORGANIC ZINC PRIME COAT, AN EPOXY INTERMEDIATE COAT AND A URETHANE FINISH COAT AS PER CMS 514 SHALL BE APPLIED TO THESE STEEL ELEMENTS. THE COLOR OF THE URETHANE FINISH COAT SHALL BE BLACK, FEDERAL STANDARD COLOR NO. 27038, UNLESS DIRECTED OTHERWISE BY THE ENGINEER. ALL NUTS, BOLTS AND OTHER RAILING APPURTENANCES SHALL ALSO BE PAINTED TO MATCH THE FINAL COLOR OF THE STEEL RAILINGS AND POSTS.

IN ADDITION TO THE VOLUME OF CONCRETE REQUIRED PER ODOT STANDARD DRAWING BR-2-15 FOR CONSTRUCTION OF PARAPETS, ANY ADDITIONAL CONCRETE NEEDED TO CREATE THE FORMLINED AESTHETIC TREATMENT SHALL BE INCLUDED WITH ITEM 511 - CONCRETE MISC.: ARCHITECTURAL TREATMENT FOR PAYMENT. ALL MATERIALS AND LABOR REQUIRED FOR THE APPLICATION OF THE FORMLINERS AND CONCRETE STAIN SHALL ALSO BE INCLUDED WITH ITEM 511 - CONCRETE MISC.: ARCHITECTURAL TREATMENT FOR PAYMENT.

ITEM 518 - POROUS BACKFILL WITH GEOTEXTILE FABRIC, AS PER PLAN

POROUS BACKFILL WITH GEOTEXTILE FABRIC, AS PER PLAN SHALL BE 2 FEET THICK AND EXTENDED UP TO 1 FOOT BELOW THE EMBANKMENT SURFACE AND LATERALLY TO THE ENDS OF THE WINGWALLS. TURN GEOTEXTILE FABRIC UP TO 6 INCHES AGAINST RETAINING WALL.

MATERIAL FOR POROUS BACKFILL SHALL BE LIMITED TO STONE. USE OF SLAG, IN ANY FORM, IS NOT PERMITTED.

ITEM SPECIAL - STRUCTURES: PROTECTION OF FACILITIES

THIS ITEM SHALL CONSIST OF FURNISHING ALL NECESSARY LABOR, MATERIALS, AND EQUIPMENT TO PROTECT EXISTING FACILITIES AS APPROVED AND DIRECTED BY THE ENGINEER DURING CONSTRUCTION.

THE CONTRACTOR IS REMINDED THAT ALL EXISTING COMPONENTS AND SYSTEMS ARE TO REMAIN IN USE DURING AND AFTER THIS PROJECT AND REQUIRE PROTECTION. THIS WORK INCLUDES, BUT IS NOT LIMITED TO:

1. ELECTRIC AND FIBER OPTIC CABLES, LINES AND POLES
2. CUYAHOGA VALLEY NATIONAL PARK PROPERTY
3. DRIVEWAYS TO THORNBURG STATION AND E-CHECK.
4. GAS LINE.
5. WATER LINE.

IT IS THE CONTRACTOR'S RESPONSIBILITY TO PROTECT THESE SYSTEMS AND COMPONENTS FOR THE DURATION OF THE CONTRACT. THE CONTRACTOR IS DIRECTED TO SECTION 107 AND PARTICULARLY TO SECTION 107.12 OF THE CONSTRUCTION AND MATERIAL SPECIFICATIONS.

PAYMENT SHALL BE MADE AT THE LUMP SUM PRICE BID FOR ITEM SPECIAL - STRUCTURES: PROTECTION OF FACILITIES. THIS SHALL INCLUDE ALL NECESSARY TOOLS, LABOR, EQUIPMENT, AND MATERIALS NECESSARY TO SUCCESSFULLY PERFORM THIS ITEM OF WORK.

P:\PR57030\Cadd\Sheets\ORR_91563_WN002.dwg 02-Sep-21 6:51 PM

DESIGN AGENCY
BURGESS & NIPLE
100 WEST ERIE STREET
PAINESVILLE, OHIO 44077

DESIGNED	DRAWN	REVIEWED	DATE
RMP	RMP	DWL	09/2021
CHECKED	REVISED	STRUCTURE FILE NUMBER	
MAB			

RETAINING WALL NOTES 2 OF 2
REINFORCED CONCRETE RETAINING WALL
STA. 33+13.17 TO STA. 34+05.17

CUY - OLD
ROCKSIDE ROAD

ESTIMATED QUANTITIES							
REF NO.	ITEM	ITEM EXT.	TOTAL	UNIT	DESCRIPTION	TOTAL	REF. SHEET
107	503	11100	LS	-	COFFERDAMS AND EXCAVATION BRACING	LS	
108	503	21301	LS	-	UNCLASSIFIED EXCAVATION, AS PER PLAN	LS	2/9
109	504	11100	125	SF	SHEET PILING LEFT IN PLACE (MINIMUM SECTION MODULUS OF 30 CUBIC INCHES PER FOOT OF WALL)	125	
110	509	10001	10644	LB	EPOXY COATED REINFORCING STEEL, AS PER PLAN	10644	2/9
111	511	46213	68	CY	CLASS QC1 CONCRETE WITH QC/QA, RETAINING/WINGWALL INCLUDING FOOTING, AS PER PLAN	68	2/9
112	511	53012	21	CY	CLASS QC2 CONCRETE, MISC.: MOMENT SLAB WITH QC/QA, AS PER PLAN	21	2/9
113	511	71200	543	SF	CONCRETE, MISC.: ARCHITECTURAL TREATMENT	543	2/9
114	512	10050	50	SY	SEALING OF CONCRETE SURFACES (NON-EPOXY)	50	3/9
115	512	33000	2	SY	TYPE 2 WATERPROOFING	2	
116	512	33300	35	SY	TYPE A WATERPROOFING	35	
117	512	44400	2	SY	TYPE B WATERPROOFING	2	
118	SPECIAL	51275500	22	SY	SEALING: ELASTOMERIC PROTECTIVE AND DECORATIVE CONCRETE COATING	22	3/9
119	516	13200	71	SF	1/2" PREFORMED EXPANSION JOINT FILLER	71	
120	516	13601	6	SF	1" PREFORMED EXPANSION JOINT FILLER, AS PER PLAN	6	3/9
121	517	75121	69	FT	RAILING (CONCRETE PARAPET WITH TWIN STEEL TUBE RAILING), AS PER PLAN	69	3/9
122	518	21201	25	CY	POROUS BACKFILL WITH GEOTEXTILE FABRIC, AS PER PLAN	25	3/9
123	518	40000	92	FT	6" PERFORATED CORRUGATED PLASTIC PIPE	92	
124	SPECIAL	53000200	LS	-	STRUCTURES: PROTECTION OF FACILITIES	LS	3/9

P:\PR57030\Cadd\Sheets\ORR_91563_WN003.dwg 02-Sep-21 6:51 PM

DESIGN AGENCY
BURGESS & NIPLE
100 WEST ERIE STREET
PAINESVILLE, OHIO 44077

DESIGNED	DRAWN	REVIEWED	DATE
RMP	RMP	DWL	09/2021
CHECKED	REVISED	STRUCTURE FILE NUMBER	
MAB			

ESTIMATED QUANTITIES
REINFORCED CONCRETE RETAINING WALL
STA. 33+13.17 TO STA. 34+05.17

CUY - OLD
ROCKSIDE ROAD

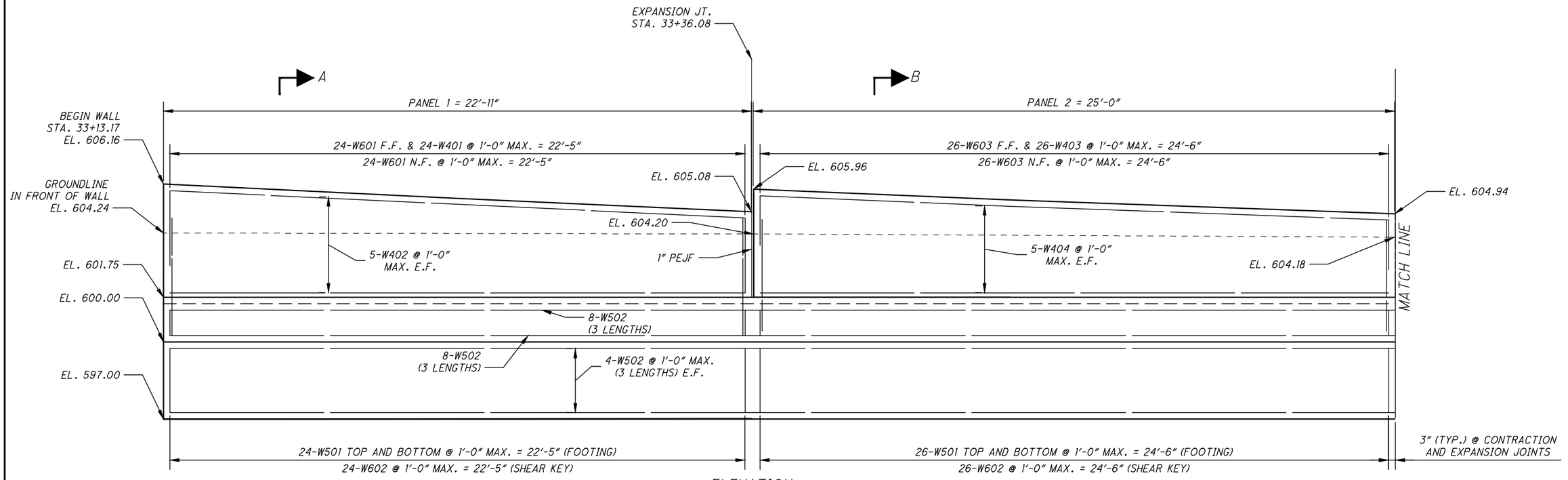

ELEVATION

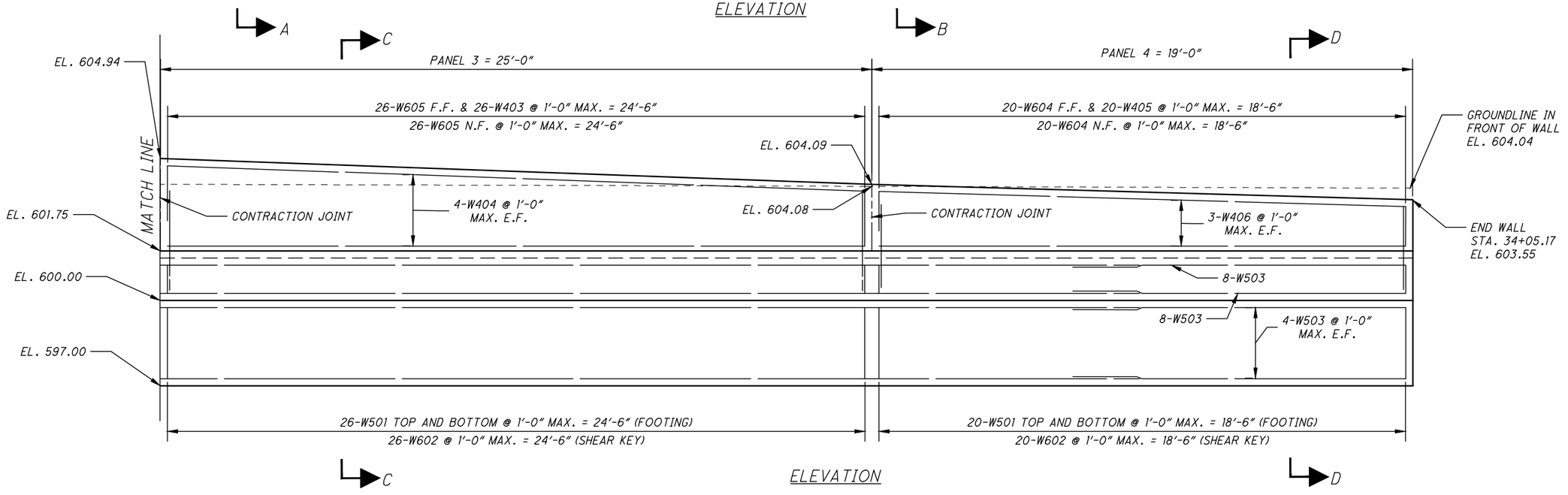

ELEVATION

NOTES:

1. MINIMUM REINFORCING LAP LENGTHS:
   #5 BAR = 2'-5"

2. SEE SHEET 6/9 FOR RETAINING WALL DETAILS AND SECTIONS.

DESIGN AGENCY
BURGESS & NIPLE
100 WEST ERIE STREET
PAINESVILLE, OHIO 44077

DESIGNED	DRAWN	REVIEWED	DATE
KMA	WTB	DWL	09/2021
CHECKED	REVISED	STRUCTURE FILE NUMBER	
MAB			

RETAINING WALL ELEVATION
REINFORCED CONCRETE RETAINING WALL
STA. 33+13.17 TO STA. 34+05.17

CUY - OLD
ROCKSIDE ROAD

P:\PR57030\Cadd\Sheets\ORR_91563_WE001.dwg 02-Sep-21 6:52 PM

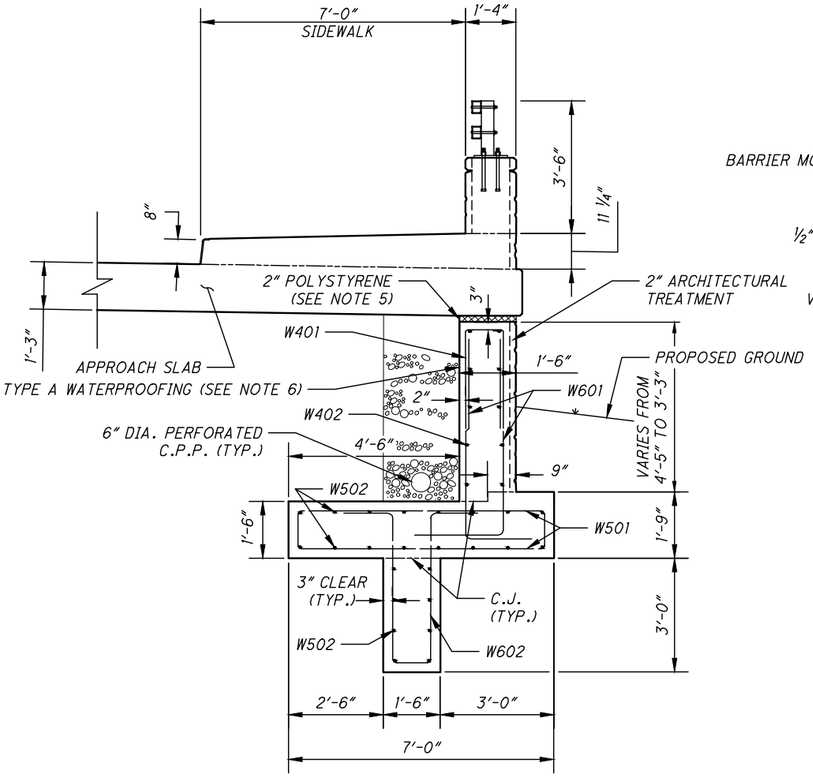

SECTION A-A
SEE NOTES 1 & 2

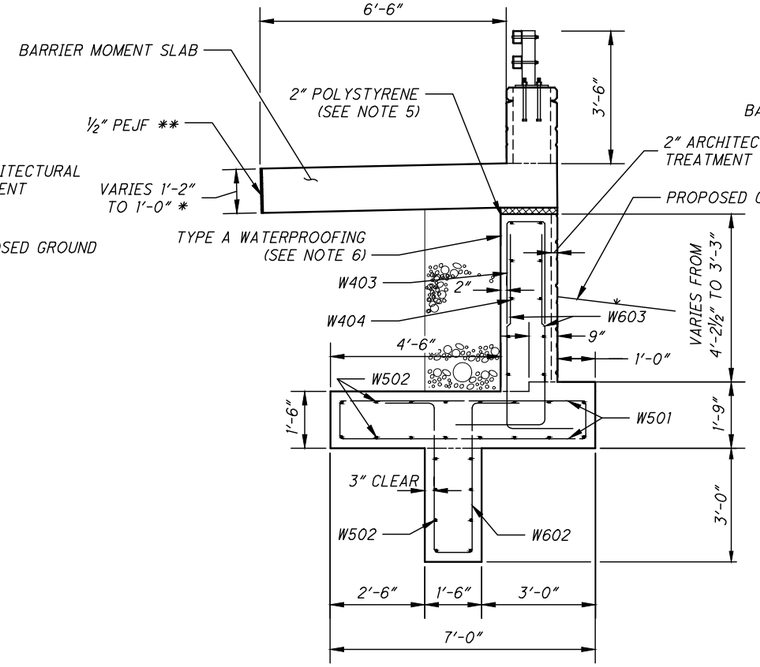

SECTION B-B
SEE NOTES 2 & 4

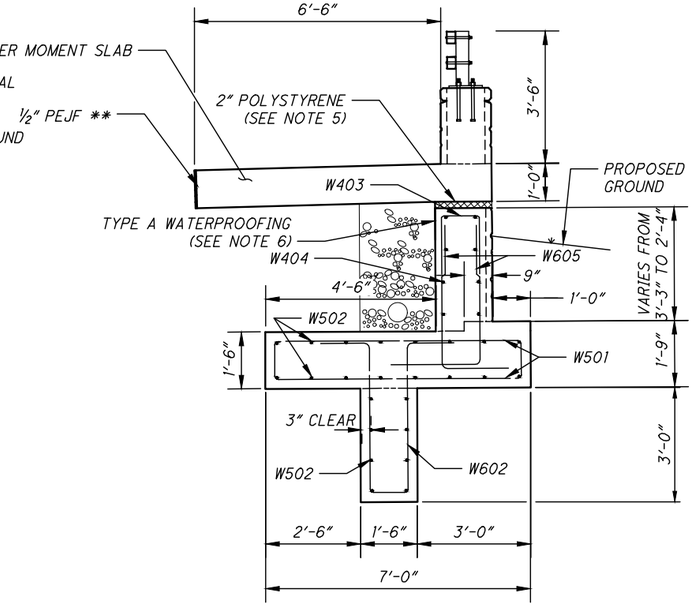

SECTION C-C
SEE NOTE 2

LEGEND:

* = TAPER FROM 1'-2" @ STA. 33+38.00 TO 1'-0" @ STA. 33+48.00

** = BETWEEN BARRIER MOMENT SLAB AND ROADWAY TYPE 2 CURB AND GUTTER.

NOTES:

1. SEE BRIDGE 00.42 SHEETS 41/44 AND 42/44 FOR APPROACH SLAB DETAILS.
2. SEE SHEETS 7/9 AND 8/9 FOR RAILING AND PARAPET DETAILS.
3. SEE SHEETS 7/9 AND 8/9 FOR BARRIER MOMENT SLAB DETAILS.
4. TYPE 2 CURB HEIGHT VARIES FROM 8 INCHES TO 6 INCHES (SEE ROADWAY PLANS).
5. POLYSTYRENE IS INCLUDED FOR PAYMENT WITH ITEM 511 - CLASS QC1 CONCRETE WITH QC/QA, RETAINING/WINGWALL INCLUDING FOOTING, AS PER PLAN
6. PROVIDE TYPE A WATERPROOFING FROM TOP OF FOOTING TO BOTTOM OF APPROACH SLAB AND BARRIER MOMENT SLAB AT VERTICAL JOINTS.
7. SEE SHEET 8/9 FOR SEALING AND ARCHITECTURAL TREATMENT DETAILS.

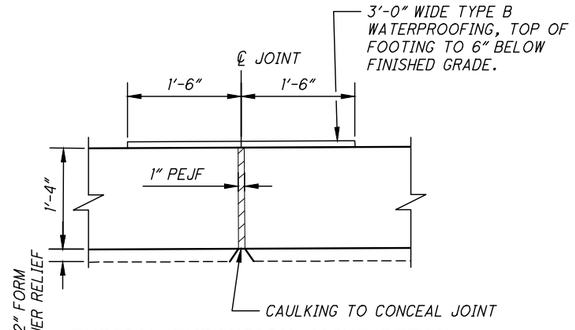

TYPICAL EXPANSION JOINT DETAIL

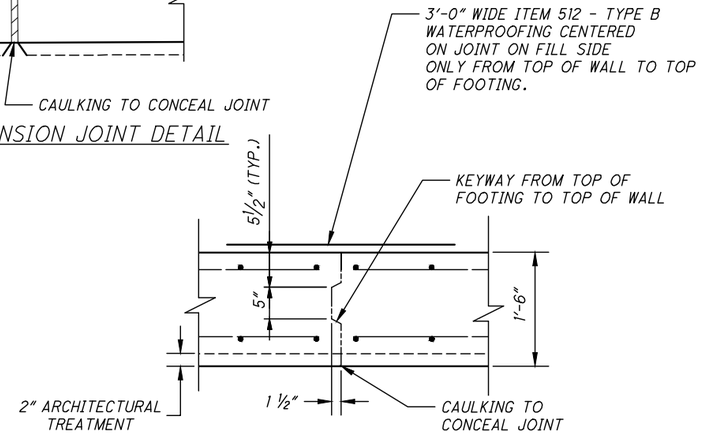

CONTRACTION JOINT PLAN DETAIL

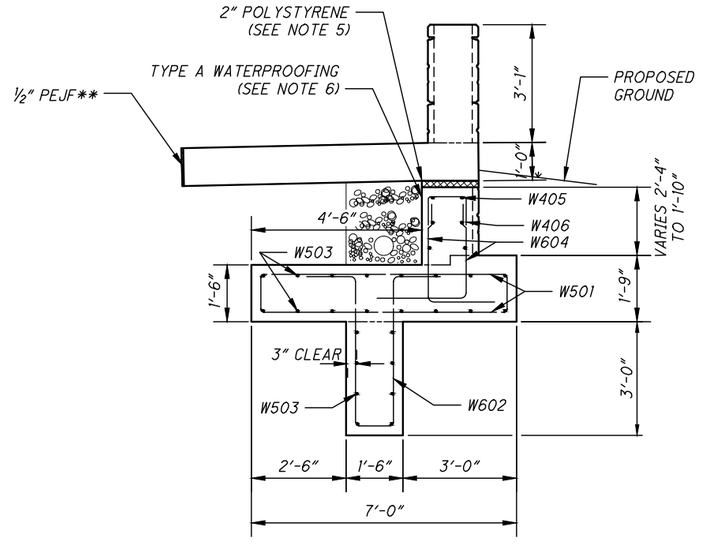

SECTION D-D
SEE NOTE 2

DESIGN AGENCY
BURGESS & NIPLE
100 WEST ERIE STREET
PAINESVILLE, OHIO 44077

DESIGNED	DRAWN	REVIEWED	DATE
KMA	WTB	DWL	09/2021
CHECKED	REVISED	STRUCTURE FILE NUMBER	
MAB			

RETAINING WALL DETAILS
REINFORCED CONCRETE RETAINING WALL
STA. 33+13.17 TO STA. 34+05.17

CUY - OLD ROCKSIDE ROAD

6 / 9

77
157

P:\PR57030\Cadd\Sheets\ORR_91563_WD001.dwg 02-Sep-21 6:52 PM

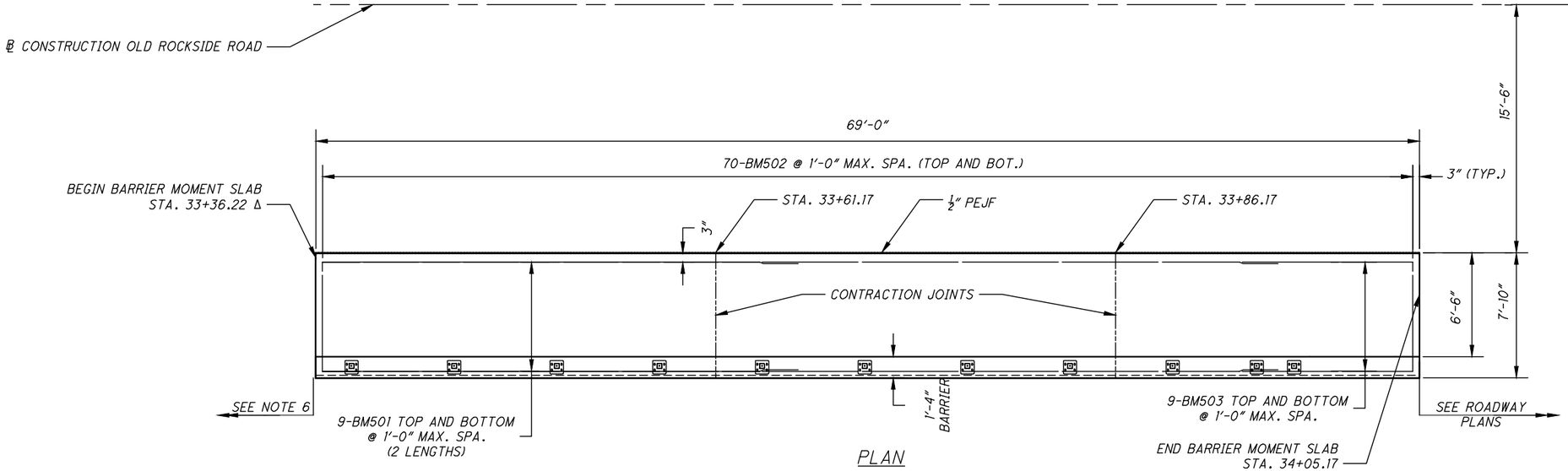

PLAN

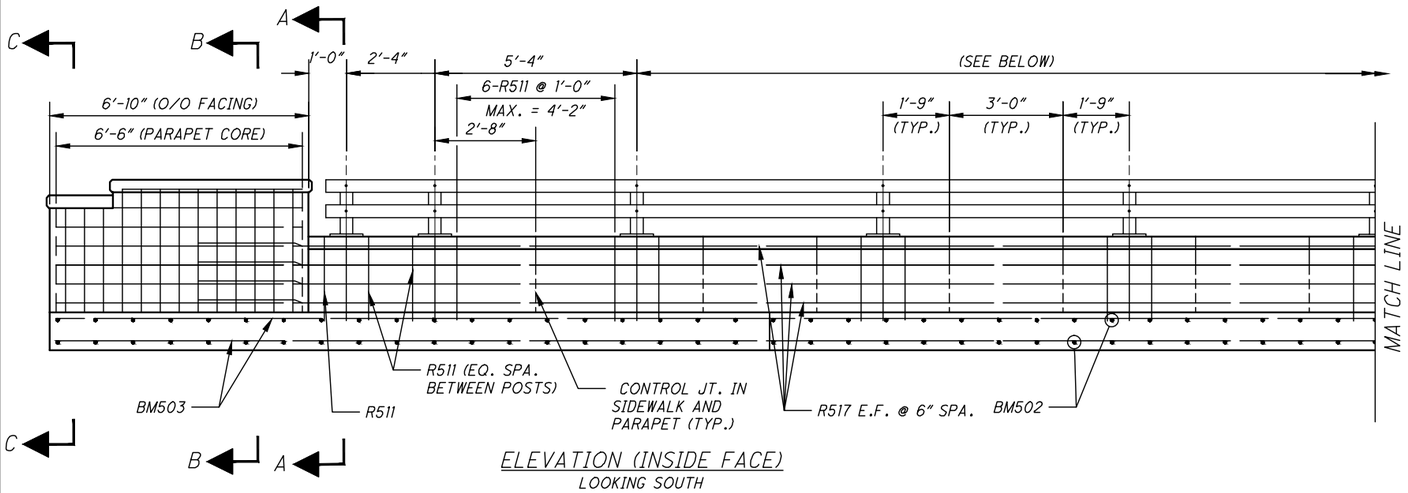

ELEVATION (INSIDE FACE)
LOOKING SOUTH

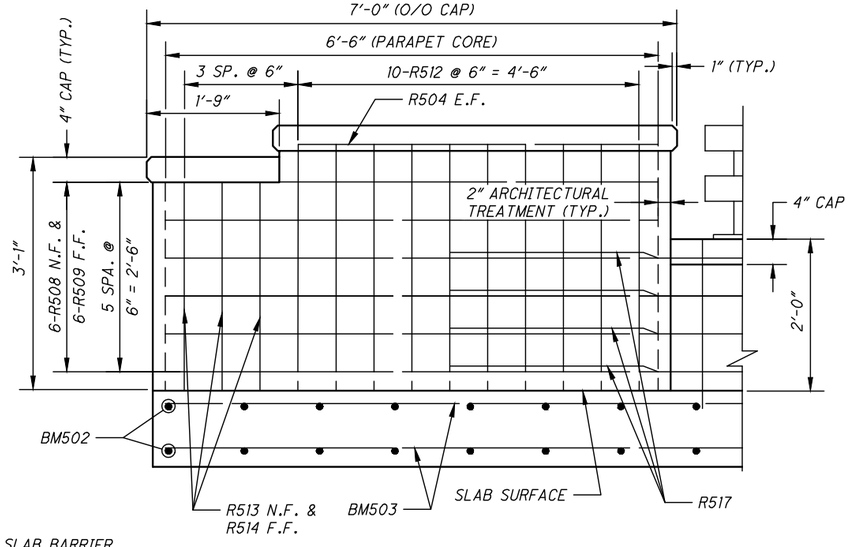

PARAPET END DETAIL (TYPICAL)

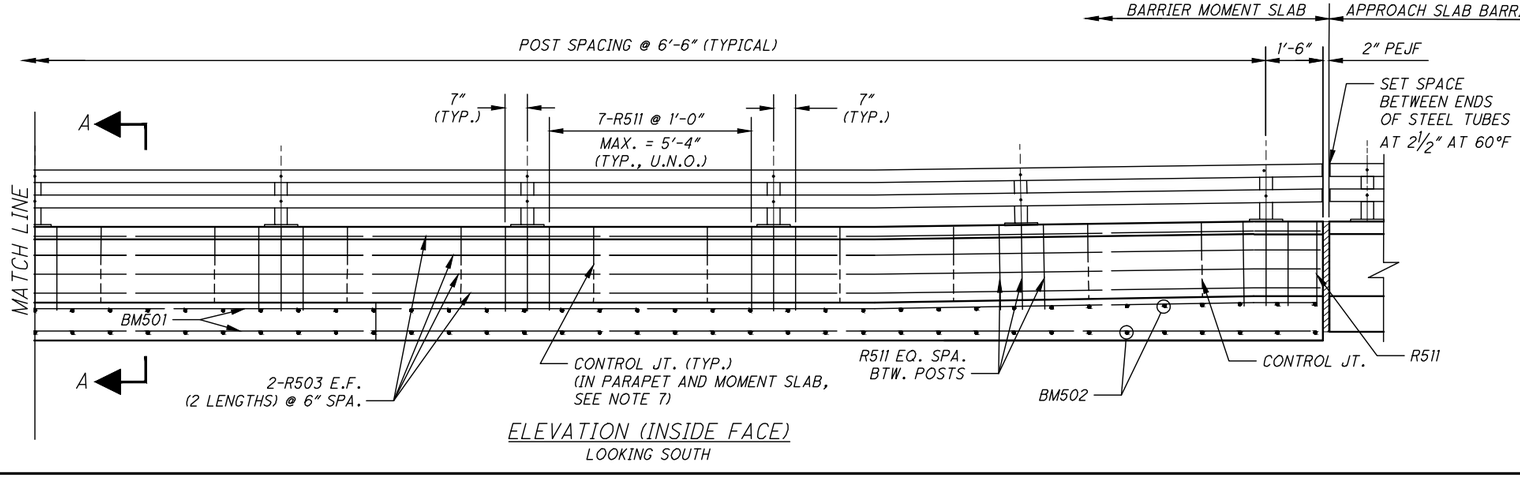

ELEVATION (INSIDE FACE)
LOOKING SOUTH

LEGEND:

Δ = GIVEN BEGIN BARRIER MOMENT SLAB STATION IS AT 60° F. SEE ODOT STD. BRIDGE DWG. AS-2-15 FOR JOINT OPENING DETAILS.

NOTES:

1. SEE SHEET 8/9 FOR BARRIER MOMENT SLAB DETAILS.
2. MINIMUM REINFORCING LAP LENGTHS:
   #5 BARS = 2'-5"
3. SEE SHEET 8/9 FOR SECTIONS A-A, B-B, AND C-C.
4. SEE CUYAHOGA COUNTY STANDARD DRAWING PRF-1C AND BR-2-15C AND ODOT STANDARD BRIDGE DRAWING BR-2-15 FOR ADDITIONAL INFORMATION.
5. DEPTH OF RELIEF OF AESTHETIC FACING IS A NOMINAL 2".
6. SEE BRIDGE 00.42 SHEETS 41/44 TO 42/44 FOR APPROACH SLAB DETAILS.
7. PROVIDE CONTROL JOINTS PER THE SIDEWALK CONTROL JOINT SHOWN IN CUYAHOGA COUNTY STD. DWG. PRF-1C.

DESIGN AGENCY
BURGESS & NIPLE
100 WEST ERIE STREET
PAINESVILLE, OHIO 44077

DESIGNED	DRAWN	REVIEWED	DATE
KMA	WTB	DWL	09/2021
CHECKED	REVISED	STRUCTURE FILE NUMBER	
MAB			

BARRIER MOMENT SLAB PLAN AND ELEVATION

REINFORCED CONCRETE RETAINING WALL
STA. 33+13.17 TO STA. 34+05.17

CUY - OLD
ROCKSIDE ROAD

P:\PR57030\Cadd\Sheets\ORR_91563_WM001.dwg 02-Sep-21 6:52 PM

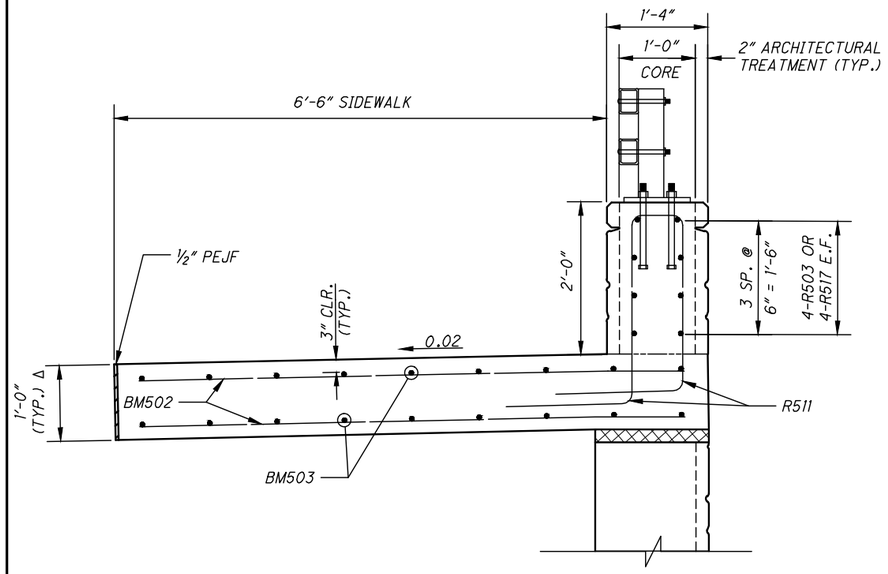

SECTION A-A

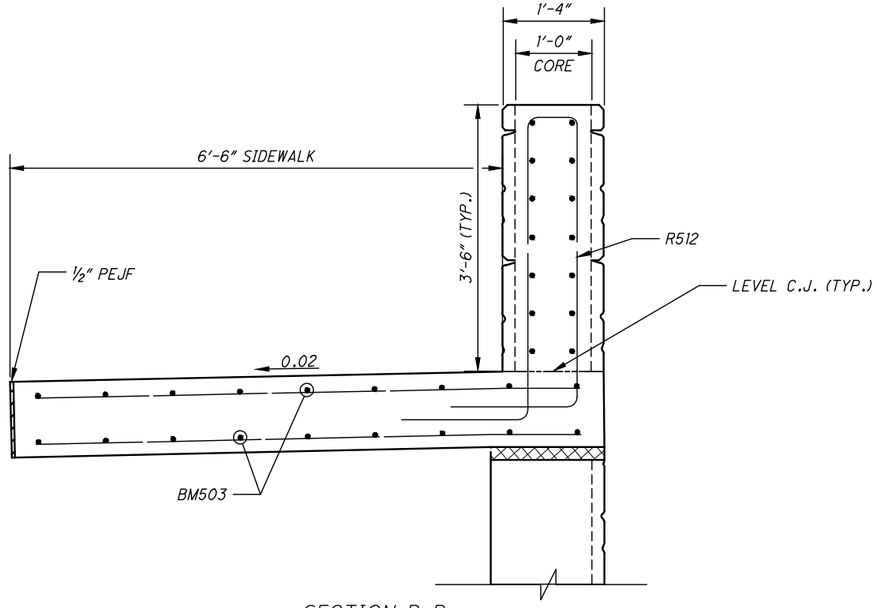

SECTION B-B

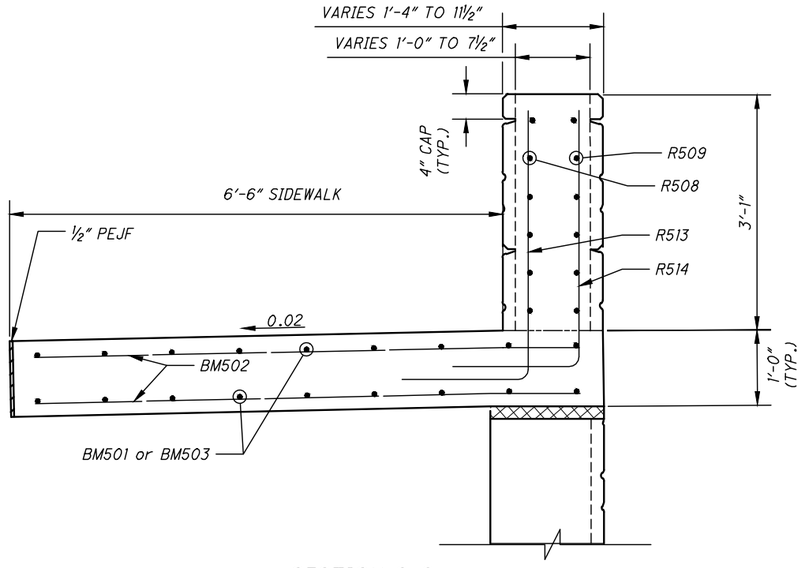

SECTION C-C

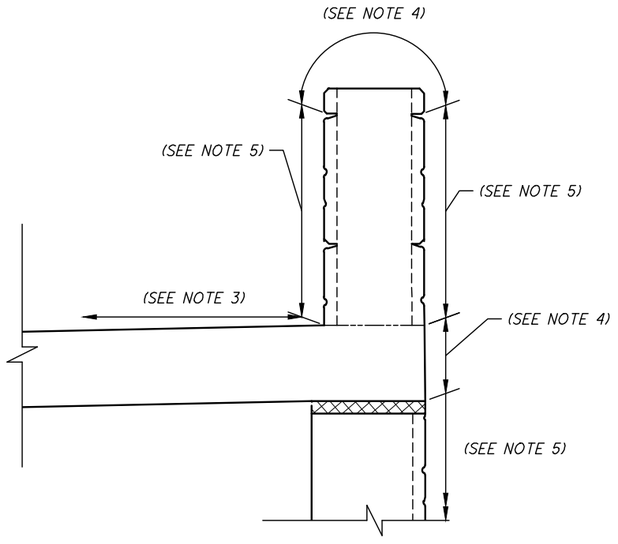

TYPICAL SEALING AND ARCHITECTURAL TREATMENT LIMITS

LEGEND:

Δ = TAPER BARRIER MOMENT SLAB THICKNESS FROM 1'-2" AT STA. 33+38.00 TO 1'-0" AT STA. 33+48.00

NOTES:

1. SEE CUYAHOGA COUNTY STANDARD DRAWINGS AS-1C, CP-1C, BR-2-15C AND PRF-1C AND ODOT STANDARD DRAWING BR-2-15 FOR ADDITIONAL INFORMATION.
2. SEE SHEET 7/9 FOR THE LOCATIONS OF SECTIONS A-A, B-B, AND C-C.
3. ITEM 512 - SEALING OF CONCRETE SURFACES (NON-EPOXY)
4. ITEM SPECIAL - SEALING MISC.: ELASTOMERIC PROTECTIVE AND DECORATIVE CONCRETE COATING (COLOR XXX)
5. ITEM 511 - CONCRETE, MISC.: ARCHITECTURAL TREATMENT (SEE SHEETS 2/9 AND 3/9 FOR NOTES.)

DESIGN AGENCY
BURGESS & NIPLE
100 WEST ERIE STREET
PAINESVILLE, OHIO 44077

DESIGNED	DRAWN	REVIEWED	DATE
KMA	WTB	DWL	09/2021
CHECKED	REVISED	STRUCTURE FILE NUMBER	
MAB			

BARRIER MOMENT SLAB DETAILS
REINFORCED CONCRETE RETAINING WALL
STA. 33+13.17 TO STA. 34+05.17

CUY - OLD ROCKSIDE ROAD

P:\PR57030\Cadd\Sheets\ORR_91563_WM002.dwg 02-Sep-21 6:53 PM

RETAINING WALL										
MARK	NO.	LENGTH	WEIGHT (LBS)	TYPE	DIMENSIONS					
					A	B	C	D	E	INC.
W401	24	7'-0"	112	18	1'-2"	3'-0"	3'-0"			
W402	10	22'-7"	151	STR						
W403	52	5'-0"	174	18	1'-2"	2'-0"	2'-0"			
W404	18	24'-7"	296	STR						
W405	20	3'-11"	52	18	1'-2"	1'-5 1/2"	1'-5 1/2"			
W406	6	18'-8"	75	STR						
W501	192	8'-3"	1652	18	6'-6"	1'-0"	1'-0"			
W502	72	30'-0"	2253	STR						
W503	24	9'-3"	232	STR						
W601	48	6'-5"	463	1	2'-0"	4'-7"				
W602	96	10'-10"	1562	13	3'-11"	1'-0"	1'-4"			
W603	52	6'-2"	482	1	2'-0"	4'-4"				
W604	40	4'-9"	285	1	2'-0"	2'-11"				
W605	52	5'-4"	417	1	2'-0"	3'-6"				
	TOTAL	WEIGHT	8206							

BARRIER MOMENT SLAB										
MARK	NO.	LENGTH	WEIGHT (LBS)	TYPE	DIMENSIONS					
					A	B	C	D	E	INC.
BM501	36	30'-0"	1126	STR						
BM502	140	7'-3"	1059	STR						
BM503	18	13'-6"	253	STR						
R503	16	30'-0"	501	STR						
R504	2	4'-6"	9	STR						
R508	6	6'-2"	39	20	0'-5"	1'-4"	4'-9"			
R509	6	6'-2"	39	STR						
R511	85	7'-10"	694	34	2'-3"	2'-5"	0'-8"	1'-6"	1'-6"	
R512	10	10'-10"	113	34	3'-9"	3'-11"	0'-8"	1'-6"	1'-6"	
R513	3	4'-11"	15	1	1'-6"	3'-6"				
R514	3	4'-9"	15	1	1'-6"	3'-4"				
R517	8	9'-3"	77	STR						
	TOTAL	WEIGHT	2438							
	TOTAL	WEIGHT	*							

* RXXX MARKED BARS INCLUDED FOR PAYMENT IN ITEM 517 - RAILING (CONCRETE PARAPET WITH TWIN STEEL TUBE RAILING), AS PER PLAN

NOTES:

1. BAR SIZE: THE BAR SIZE IS INDICATED IN THE BAR MARK. THE MARK BEGINS WITH ONE OR TWO LETTERS THAT IDENTIFY THE BAR LOCATION. THE NEXT ONE OR TWO DIGITS IS THE BAR SIZE. THE FINAL TWO DIGITS ARE THE SEQUENCE NUMBERS.

   EXAMPLE: A501
   A = ABUTMENT
   5 = #5 BAR
   01 = SEQUENCE NUMBER

2. BAR DIMENSIONS SHOWN ARE OUT TO OUT UNLESS OTHERWISE INDICATED.
3. STR IN THE BAR TYPE COLUMN INDICATES A STRAIGHT BAR.
4. S.O. INDICATES A SERIES OF BARS.
5. INCR. INDICATES THE LENGTH OF INCREMENT FOR SERIES BARS.
6. RAD. INDICATES THE RADIUS OF A BAR.
7. ALL REINFORCING STEEL IS TO BE EPOXY COATED.
8. MARKS R501, R502, R505, R506, R507, R510, R515, AND R516 NOT USED.

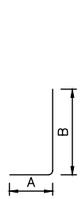

TYPE 1

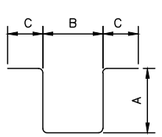

TYPE 13

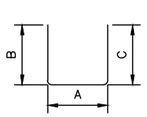

TYPE 18

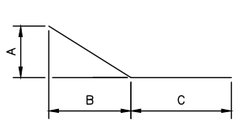

TYPE 20

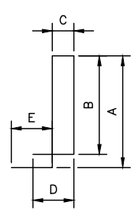

TYPE 34

P:\PR57030\Cadd\Sheets\ORR_91563_WL001.dwg 02-Sep-21 6:53 PM

DESIGN AGENCY
BURGESS & NIPLE
100 WEST ERIE STREET
PAINESVILLE, OHIO 44077

DESIGNED	DRAWN	REVIEWED	DATE
KMA	KMA	DWL	09/2021
CHECKED	REVISED	STRUCTURE FILE NUMBER	
MAB			

REINFORCING STEEL
REINFORCED CONCRETE RETAINING WALL
STA. 33+13.17 TO STA. 34+05.17

CUY - OLD ROCKSIDE ROAD

9 / 9

80
157

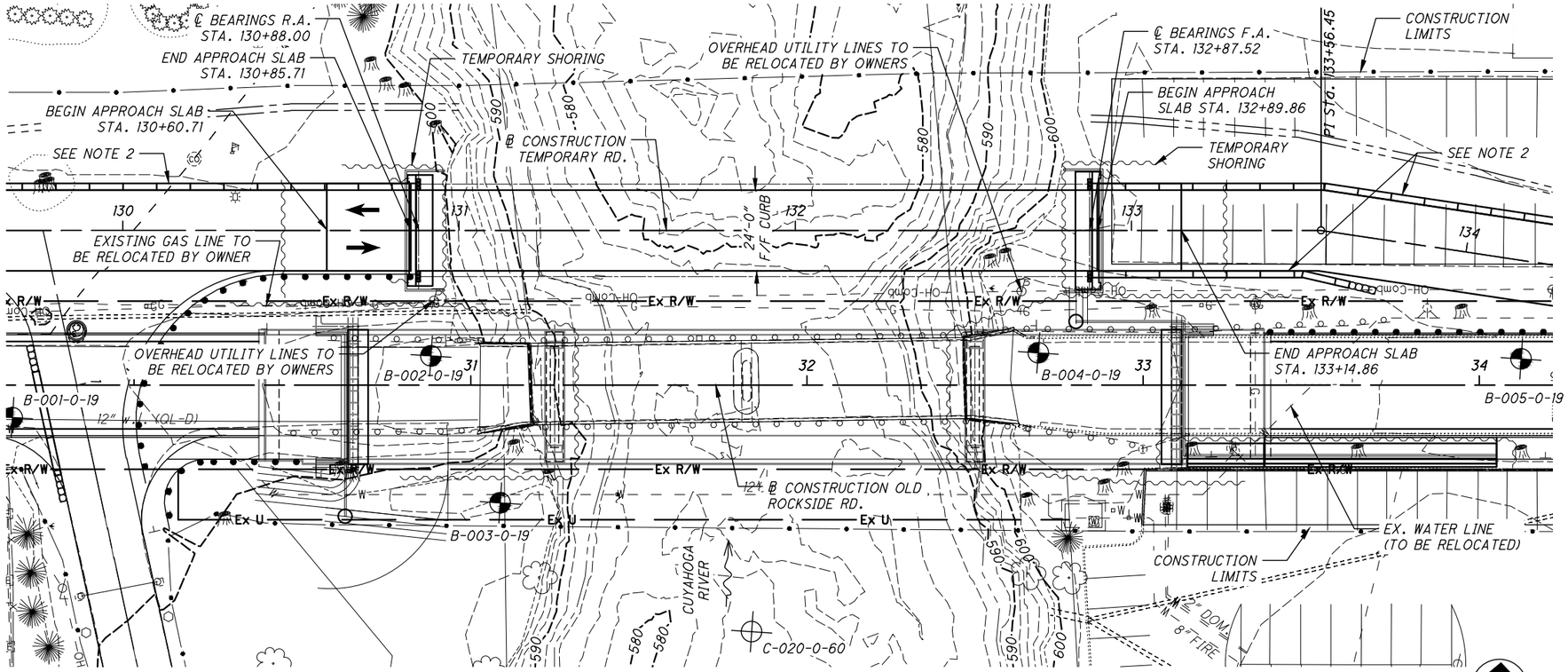

PLAN

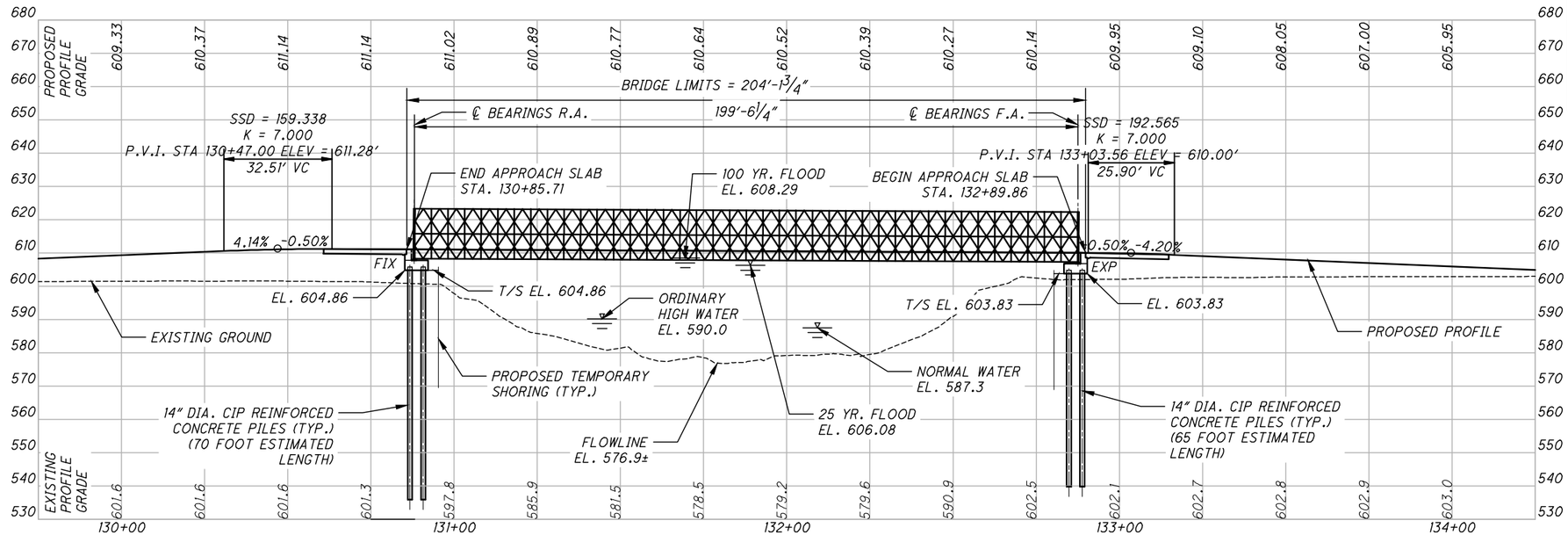

PROFILE ALONG ℄ CONSTRUCTION TEMPORARY RD.

BENCHMARKS

BENCHMARK BM5
DESCRIPTION: BENCHTIE IN TPP
NORTHING: 630757.00
EASTING: 2207232.93
STA. 29+34.76 (19.96' LT)
ELEVATION = 602.05

BENCHMARK BM6
DESCRIPTION: BENCHTIE IN
TLP 803301
NORTHING: 630804.44
EASTING: 2207829.72
STA. 35+33.38 (27.23' LT)
ELEVATION = 605.18

SOIL BORING INFORMATION

BORING NO.	B-002-0-19	B-003-0-19	B-004-0-19
STATION:	30+88.24	31+08.81	32+68.84
OFFSET:	8.64 LT	35.01 RT	9.60 LT
LATITUDE:	41.3946000	41.394500	41.394650
LONGITUDE:	-81.629600	-81.629500	-81.628950
ELEVATION:	606.97'	599.61'	607.71'

HYDRAULIC DATA

DRAINAGE AREA: 703 SQ. MI.

INTERVAL YEAR	Q CFS	V FPS	FREEBOARD
25	17,500	4.16	NONE
100	21,900	3.35	

TRAFFIC DATA

CURRENT ADT (2019): 1,800

TEMPORARY STRUCTURE

TYPE: SINGLE SPAN MODULAR STEEL TRUSS WITH EPOXY COATED STEEL DECK AND REINFORCED CONCRETE ABUTMENTS.

SKEW: NONE

SPAN: 199'-6¼" C/C BEARINGS

ROADWAY: 24'-0" F/F CURB/RAILING MINIMUM

LOADING: HL-93 AND ALL CRANE LOADS

WEARING SURFACE: NON-SKID EPOXY COATING

APPROACH SLABS: 25' LONG (AS-1-15)

ALIGNMENT: TANGENT

CROWN: NONE

LEGEND:

= PROJECT SOIL BORING

= HISTORIC SOIL BORING

= PORTABLE BARRIER

NOTES:

1. EARTHWORK LIMITS SHOWN ARE APPROXIMATE. ACTUAL SLOPES SHALL CONFORM TO PLAN CROSS SECTIONS.
2. PORTABLE BARRIER PER PCB-91. SEE ROADWAY PLANS FOR DETAILS AND PAYMENT.
3. REMOVE TEMPORARY BRIDGE AFTER TRAFFIC IS RETURNED TO ORIGINAL ALIGNMENT.

BURGESS & NIPLE
100 WEST ERIE STREET
PAINESVILLE, OHIO 44077

DESIGNED KMA | DRAWN KMA | REVIEWED DWL | DATE 09/2021
CHECKED GJL | REVISED | STRUCTURE FILE NUMBER

CUYAHOGA COUNTY
STA. 130+85.71
STA. 132+89.86

SITE PLAN
TEMPORARY BRIDGE 00.42 T
OVER CUYAHOGA RIVER

CUY - OLD
ROCKSIDE ROAD

P:\PR57030\Cadd\Sheets\ORR_91563_TEMP_SP002.dwg 13-Sep-21 11:10 AM

REFER TO THE FOLLOWING ODOT STANDARD BRIDGE DRAWINGS:

AS-1-15 REVISED 07-17-15

AND TO THE FOLLOWING ODOT SUPPLEMENTAL SPECIFICATIONS:

800 DATED 07-16-21

AND TO THE FOLLOWING CUYAHOGA COUNTY DEPARTMENT OF PUBLIC WORKS STANDARD BRIDGE DRAWINGS:

AS-1C REVISED 07-14-16

DESIGN SPECIFICATIONS:

THIS STRUCTURE CONFORMS TO THE 8TH EDITION OF THE "LRFD BRIDGE DESIGN SPECIFICATIONS" ADOPTED BY THE AMERICAN ASSOCIATION OF STATE HIGHWAY AND TRANSPORTATION OFFICIALS, 2017, THE ODOT BRIDGE DESIGN MANUAL, 2020, AND THE CURRENT CUYAHOGA COUNTY DEPARTMENT OF PUBLIC WORKS' SUPPLEMENT THERETO.

DESIGN DATA:

CLASS QC1 CONCRETE - COMPRESSIVE STRENGTH 4.0 KSI (SUBSTRUCTURE)

REINFORCING STEEL - MINIMUM YIELD STRENGTH 60 KSI
STRUCTURAL STEEL - ASTM A709 GRADE 50 - YIELD STRENGTH 50 KSI
STRUCTURAL STEEL - ASTM A252, GRADE 2 - YIELD STRENGTH 35 KSI (14" DIAMETER CAST-IN-PLACE REINFORCED CONCRETE PILES)

DESIGN LOADING:

HL-93

ALL CRANE LOADING:

ALL CRANE - 250T 6250L-8 164000

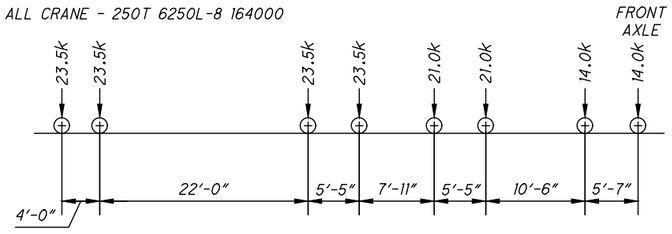

ALL CRANE - 300T LTM 1250-6.1

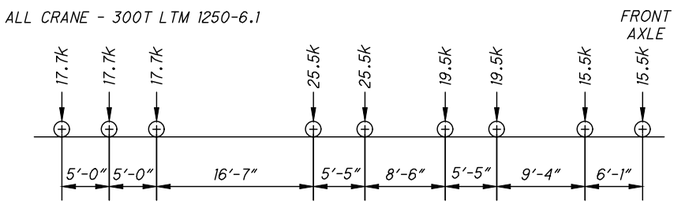

ALL CRANE - GRT 9165 WITH TIRES AND BOOM

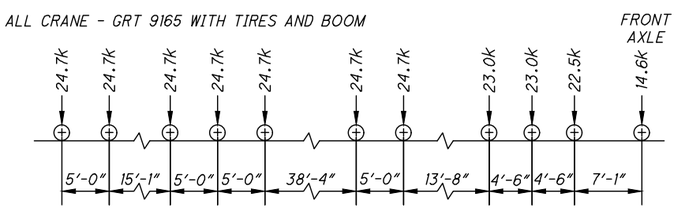

ALL CRANE - LTM1450-8.1 CRANE WITH BOOM

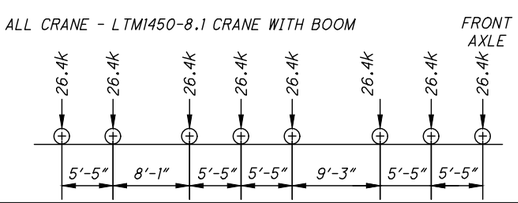

ABUTMENT PILE DESIGN LOADS (ULTIMATE BEARING VALUE):

THE ULTIMATE BEARING VALUE IS 240 KIPS PER PILE FOR THE REAR AND FORWARD ABUTMENT PILES.

REAR ABUTMENT PILES:
12 - 14" CAST-IN-PLACE REINFORCED CONCRETE PILES 75 FEET LONG, ORDER LENGTH
1 DYNAMIC LOAD TESTING ITEM

FORWARD ABUTMENT PILES:
12 - 14" CAST-IN-PLACE REINFORCED CONCRETE PILES 70 FEET LONG, ORDER LENGTH
1 DYNAMIC LOAD TESTING ITEM

PILE DRIVING:

THE MINIMUM RATED ENERGY OF THE HAMMER USED TO INSTALL THE PILES SHALL BE 11,000 FOOT-POUNDS. ENSURE THAT STRESSES IN THE PILES DURING DRIVING DO NOT EXCEED 31,500 POUNDS PER SQUARE INCH.THE MINIMUM WALL THICKNESS PER CMS 507.06 FOR THE PROPOSED 14" CAST-IN-PLACE REINFORCED CONCRETE PILES ARE AS FOLLOWS:

0.4" FOR THE REAR ABUTMENT AND FORWARD ABUTMENT PILES

PILE DRIVING CONSTRAINTS:

PRIOR TO DRIVING PILES, CONSTRUCT THE SPILL THROUGH SLOPES AND THE BRIDGE APPROACH EMBANKMENT BEHIND THE ABUTMENTS UP TO THE LEVEL OF THE SUBGRADE ELEVATION FOR A MINIMUM DISTANCE OF 200 FEET BEHIND EACH ABUTMENT. DO NOT BEGIN THE EXCAVATION FOR THE ABUTMENT FOOTINGS AND THE INSTALLATION OF THE ABUTMENT PILES UNTIL AFTER THE ABOVE REQUIRED EMBANKMENT HAS BEEN CONSTRUCTED AND A 60 CALENDAR DAY WAITING PERIOD HAS ELAPSED. THE ENGINEER MAY ADJUST THE LENGTH OF THE WAITING PERIOD BASED ON SETTLEMENT PLATFORM READINGS. AFTER THE SPECIFIED WAITING PERIOD HAS ELAPSED, DRIVE ABUTMENT PILES TO THE UBV.

SEQUENCE OF CONSTRUCTION:

SEE ROADWAY SHEET 14/157 FOR SEQUENCE OF CONSTRUCTION.

SPECIFICATIONS AND STANDARD CONSTRUCTION DRAWINGS:

THE STATE OF OHIO DEPARTMENT OF TRANSPORTATION, CONSTRUCTION AND MATERIALS SPECIFICATIONS, DATED JANUARY 1, 2020, AND THE NOTED STANDARD CONSTRUCTION DRAWINGS SHALL GOVERN THIS IMPROVEMENT. WHEREVER THE WORD "STATE" OCCURS, IT IS TO MEAN CUYAHOGA COUNTY. WHEREVER THE WORD "DEPARTMENT" OCCURS, IT IS TO MEAN THE BOARD OF COUNTY COMMISSIONERS OF CUYAHOGA COUNTY, OHIO, AND WHEREVER THE WORD "DIRECTOR" OCCURS, IT IS TO MEAN COUNTY ENGINEER, AND/OR THEIR DESIGNATED REPRESENTATIVE, LIMITED TO THE PARTICULAR DUTIES ENTRUSTED TO THEM. WHEREVER THE WORD "ENGINEER" OCCURS, IT REFERS TO THE PROJECT ENGINEER.

MAINTENANCE OF TRAFFIC:

SEE THE ROADWAY PLANS FOR MAINTENANCE OF TRAFFIC REQUIREMENTS.

UTILITY LINES:

THE ULTILITY(IES) SHALL BEAR ALL EXPENSE INVOLVED IN RELOCATING OR INSTALLING THE AFFECTED UTILITY LINES. THE CONTRACTOR AND UTILITY(IES) ARE TO COOPERATE BY ARRANGING THEIR WORK IN SUCH A MANNER THAT INCONVENIENCES TO EITHER WILL BE HELD TO A MINIMUM.

LIMITATIONS OF OPERATIONS:

THE CONTRACTOR'S ACTIVITIES AND WORK SCHEDULE SHALL BE CONSTRAINED BY THE FOLLOWING SPECIAL LIMITATIONS:
1. ENVIRONMENTAL COMMITMENTS (SEE ROADWAY PLANS).
2. NO EQUIPMENT OR MATERIALS WILL BE STORED ON PARK PROPERTY

STEEL TIE RODS

THIS WORK CONSISTS OF DRILLING THROUGH SOIL AND THE PROPOSED TEMPORARY SHORING, FURNISHING AND INSTALLING PERMANENT TIE RODS WITH A MINIMUM ULTIMATE LOAD CAPACITY OF 100 KIPS AND ALL LABOR, EQUIPMENT AND ALL OTHER HARDWARE AND MATERIALS NECESSARY TO COMPLETE THE INSTALLATIONS TO THE SATISFACTION OF THE ENGINEER. STEEL SHALL BE GALVANIZED PER 711.02. POSITIVE LOCK OFF SHALL BE PROVIDED TO PREVENT LOOSENING WHILE IN SERVICE. THREADED BAR SHALL CONFORM TO ASTM A615. NUTS SHALL BE TORQUED TO A SNUG TIGHT CONDITION PRIOR TO BACKFILLING. THE TIE ROD SYSTEM SHALL BE SUPPLIED BY DYWIDAG-SYSTEMS INTERNATIONAL, WILLIAMS FORM ENGINEERING CORP. OR AN APPROVED EQUAL TIE ROD SYSTEM MANUFACTURER.

ALL COSTS FOR THE ABOVE WORK SHALL BE INCLUDED IN THE LUMP SUM CONTRACT PRICE BID FOR ITEM 503 - COFFERDAMS AND EXCAVATION BRACING, AS PER PLAN.

DESIGN AGENCY
BURGESS & NIPLE
100 WEST ERIE STREET
PAINESVILLE, OHIO 44077

DESIGNED	DRAWN	REVIEWED	DATE
RMP	RMP	DWL	09/2021
CHECKED	REVISED	STRUCTURE FILE NUMBER	
JAA			

STRUCTURE NOTES 1 OF 4
TEMPORARY BRIDGE 00.42 T
OVER CUYAHOGA RIVER

CUY - OLD
ROCKSIDE ROAD

P:\PR57030\Cadd\Sheets\ORR_91563_TEMP_SN001.dwg 14-Sep-21 2:56 PM

ITEM SPECIAL - SETTLEMENT PLATFORMS

GENERAL:
BASED ON THE SOIL TYPES ENCOUNTERED AND THE AMOUNT OF PROPOSED FILL, IT IS ANTICIPATED THAT LARGE AMOUNTS OF SETTLEMENT COULD OCCUR AT THE PROPOSED TEMPORARY BRIDGE APPROACHES. IN THESE LOCATIONS, SETTLEMENT OF THE UNDERLYING SOILS SHOULD BE MONITORED BY MEANS OF SETTLEMENT PLATFORMS. SETTLEMENT PLATFORMS SHALL BE PLACED AT THE FOLLOWING LOCATIONS (BASED ON ℄ CONSTRUCTION TEMPORARY RD.):

- REAR APPROACH
  STA. 129+50.00, OFFSET 12' LT
- REAR ABUTMENT
  STA. 130+50.00, OFFSET 6' RT
- FORWARD ABUTMENT
  STA. 133+15.00, OFFSET 12' LT
- FORWARD APPROACH
  STA. 134+25.00, OFFSET 12' RT

CONTRACTOR HAS THE OPTION OF USING EITHER STEEL OR PLYWOOD PLATFORM BASE.

CONTRACTOR SHALL FURNISH MATERIALS AND LABOR TO EXTEND PIPE THROUGH THE ENTIRE FILL.

SETTLEMENT PLATFORMS SHALL BE ANCHORED BY STAKES DRIVEN AT EACH CORNER TO PREVENT OVERTURNING.

DESCRIPTION:
THIS ITEM CONSISTS OF FURNISHING, CONSTRUCTING, AND MAINTAINING SETTLEMENT PLATFORMS AND OBTAINING SETTLEMENT READINGS AS REQUIRED BY THE PLANS OR AS DIRECTED BY THE ENGINEER. AT THE OPTION AND EXPENSE OF THE CONTRACTOR, ADDITIONAL SETTLEMENT PLATFORMS MAY BE INSTALLED AT LOCATIONS APPROVED BY THE ENGINEER.

SETTLEMENT READINGS SHALL BE TAKEN WEEKLY DURING CONSTRUCTION AND DURING ANY SPECIFIED WAITING PERIOD. THE READINGS SHALL BE PLOTTED ON GRAPH PAPER PRESENTING DEFORMATION (ON THE NEGATIVE Y-AXIS) AND FILL HEIGHT (ON THE POSITIVE Y-AXIS) VERSUS TIME (ON THE X-AXIS). A COPY OF EACH CUMULATIVE PLOT SHALL BE SENT TO THE COUNTY GEOTECHNICAL ENGINEER AND THE PROJECT ENGINEER AFTER EACH SETTLEMENT READING IS RECORDED.

THE CONTRACTOR SHALL IDENTIFY, SET, AND MAINTAIN AN APPROPRIATE NUMBER OF FIXED BENCHMARKS, REFERENCE POINTS, ETC. TO FACILITATE THE SURVEYING OF THE SETTLEMENT PLATFORMS. ALL FIXED POINTS SHALL BE LOCATED NOT LESS THAN 150 FEET FROM THE TOE OF THE PROPOSED EMBANKMENT FILL AT ANY LOCATION.

MATERIALS:
SOUND LUMBER SUCH AS ¾" EXTERIOR GRADE PLYWOOD SHALL BE USED FOR THE BASE. THE PIPE SHALL BE 2½" STANDARD BLACK PIPE WITH THREADED FITTINGS AS SHOWN ON THE PLANS. A STEEL PLATE 3'-0"x3'-0"x⅛" MAY BE SUBSTITUTED FOR THE LUMBER FOR THE PLATFORMS, AT THE CONTRACTOR'S OPTION.

CONSTRUCTION METHODS:
THE PLATFORM SHALL CONFORM TO THE DETAILS SHOWN ON THE PLANS. IF EXISTING PAVEMENT IS ENCOUNTERED AT THE SPECIFIED LOCATIONS, THE PAVEMENT (INCLUDING ANY BASE MATERIAL) SHALL BE REMOVED AND THE SETTLEMENT PLATFORM SHALL BE SET ON THE EXPOSED SUBGRADE. THE PLATFORM SHALL BE SET ON A LEVEL SURFACE. THE PIPE SHALL BE FIRMLY SECURED TO THE PLATFORM AND SHALL BE MAINTAINED IN A PLUMB POSITION DURING THE PLACEMENT OF THE EMBANKMENT. THE PIPE SHALL BE MARKED AT INTERVALS TO FACILITATE MEASUREMENT OF THE DEPTH OF FILL.

THE CONTRACTOR SHALL PROTECT SETTLEMENT PLATFORMS FROM CONSTRUCTION TRAFFIC/ACTIVITIES USING APPROPRIATE METHODS SUCH AS BARRICADES, CONES, ETC. THE CONTRACTOR SHALL STOP WORK IN ANY LOCATION WHERE THE SETTLEMENT PLATFORM HAS BEEN DISTURBED OR DAMAGED. PLATFORMS OR PIPES DAMAGED OR DISPLACED DURING CONSTRUCTION SHALL BE RESTORED TO THEIR PROPER CONDITION AT THE CONTRACTOR'S EXPENSE.

PRIOR TO PAVING:
THE TOP OF THE SETTLEMENT PLATFORM PIPE SHALL BE CUT OFF TWO FEET BELOW THE FINISHED SURFACE OF THE SUBGRADE OR FINISHED GROUND SURFACE, WHICHEVER IS APPLICABLE.

WAITING PERIOD:
THE WAITING PERIOD SHALL NOT BE CONSIDERED TO BEGIN UNTIL ALL FILL FOR THE LOADING HAS BEEN PLACED. AT ANY LOCATION ON THE PROJECT, THE LOADING FILL SHALL CONSIST OF THE PROPOSED EMBANKMENT CONSTRUCTED TO THE ENTIRE PROPOSED LATERAL EXTENTS AND TO WITHIN ONE FOOT OF THE PROPOSED VERTICAL EXTENTS.

NO CONSTRUCTION OF STRUCTURES (INCLUDING FOUNDATIONS, PILE DRIVING, AND TEMPORARY SHORING) OR PAVING OF ROADWAYS SHALL BEGIN UNTIL CONFIRMATION HAS BEEN RECEIVED FROM THE ENGINEER THAT THE CRITERIA TO END THE WAITING PERIOD HAVE BEEN MET.

WAITING PERIOD CRITERIA:
THE ANTICIPATED WAITING PERIOD IN CALENDAR DAYS IS 60 DAYS FOR ALL LOCATIONS.

THE ENGINEER WILL CONSIDER THE WAITING PERIOD COMPLETE WHEN CONSECUTIVE SETTLEMENT READINGS, RECORDED AFTER EMBANKMENT CONSTRUCTION IS COMPLETE AND AT LEAST ONE WEEK (168 HOURS) APART, RESULT IN ELEVATION DIFFERENCES EQUAL TO OR LESS THAN ⅛".

METHOD OF MEASUREMENT:
THE NUMBER OF SETTLEMENT PLATFORMS TO BE PAID FOR WILL BE THE ACTUAL NUMBER OF SETTLEMENT PLATFORMS COMPLETED, MAINTAINED, AND ACCEPTED BY THE ENGINEER.

THE COUNTY WILL CONSIDER VIBRATING WIRE SETTLEMENT MONITORING PLATFORMS IN LIEU OF THE CONVENTIONAL SETTLEMENT PLATFORMS. THE CONTRACTOR SHOULD PROVIDE DETAILS OF THE PROPOSED VIBRATING WIRE SETTLEMENT PLATFORMS AS WELL AS DESIGN DRAWINGS OF THE PROPOSED PLATFORM AND CABLING LAYOUT TO THE ENGINEER AT LEAST 30 DAYS PRIOR TO CONSTRUCTION. THE COUNTY WILL REQUIRE 10 WORKING DAYS FOR REVIEW AND APPROVAL.

THE DESIGN DRAWINGS SHOULD ILLUSTRATE THE PROPOSED SETTLEMENT VIBRATING WIRE SETTLEMENT PLATFORM LOCATIONS WITH ALL EXISTING AND PROPOSED SITE FEATURES TO VERIFY THE PROPOSED CABLING WILL NOT CONFLICT WITH EXISTING FACILITIES, PROPOSED FACILITIES, OR UTILITIES. NO ADDITIONAL PAYMENT WILL BE PROVIDED IF THE CONTRACTOR ELECTS TO UTILIZE VIBRATING WIRE SETTLEMENT PLATFORMS.

BASIS OF PAYMENT:
PAYMENT WILL BE MADE AT THE CONTRACT BID UNIT BID PRICE PER EACH ITEM SPECIAL - SETTLEMENT PLATFORM WHICH IS COMPENSATION FOR CONSTRUCTING, MAINTAINING, AND MONITORING THE SETTLEMENT PLATFORMS INCLUDING FURNISHING ALL LABOR, EQUIPMENT, MATERIALS, AND INCIDENTALS NECESSARY TO COMPLETE THIS WORK. PAYMENT WILL NOT BE MADE FOR SETTLEMENT PLATFORMS WHICH BECOME USELESS BECAUSE OF DAMAGE CAUSED BY THE CONTRACTOR'S OPERATIONS.

THE FOLLOWING ESTIMATED QUANTITY HAS BEEN INCLUDED IN THE ESTIMATED QUANTITIES FOR USE TO COMPLETE THE WORK NOTED ABOVE:

ITEM SPECIAL - SETTLEMENT PLATFORM	4 EACH

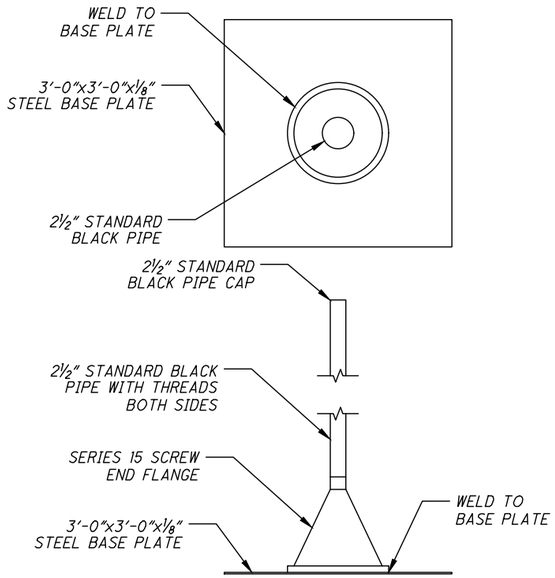

STEEL SETTLEMENT PLATFORM DETAIL

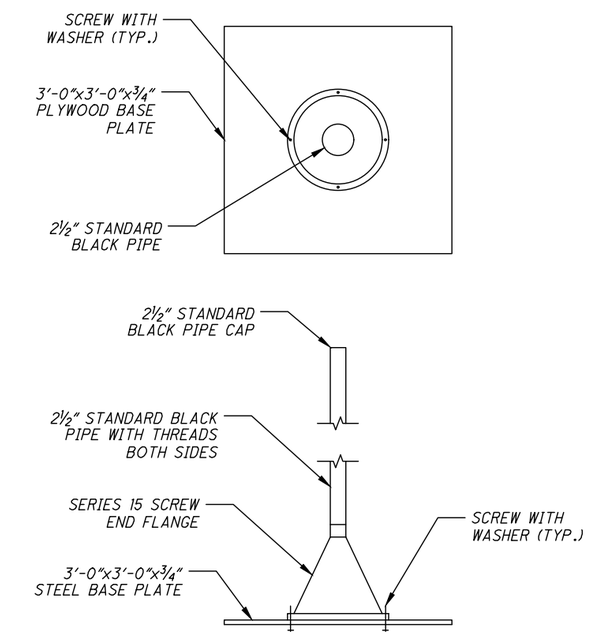

PLYWOOD SETTLEMENT PLATFORM DETAIL

DESIGN AGENCY
BURGESS & NIPLE
100 WEST ERIE STREET
PAINESVILLE, OHIO 44077

DESIGNED	DRAWN	REVIEWED	DATE
RMP	RMP	DWL	09/2021
CHECKED	REVISED	STRUCTURE FILE NUMBER	
JAA			

STRUCTURE NOTES 2 OF 4
TEMPORARY BRIDGE 00.42 T
OVER CUYAHOGA RIVER

CUY - OLD ROCKSIDE ROAD

3 / 18

83
157

P:\PR57030\Cadd\Sheets\ORR_91563_TEMP_SN002.dwg 13-Sep-21 11:11 AM

ITEM 208 - VIBRATION CONTROL AND MONITORING, AS PER PLAN

STRUCTURES OF INTEREST INCLUDE, BUT ARE NOT LIMITED TO THE FOLLOWING:

- BUILDING AT 8111 ROCKSIDE RD, CLEVELAND, OH 44125
- BUILDING AT 8001 ROCKSIDE RD, CLEVELAND, OH 44125
- BUILDING AT 6150 W CANAL RD, VALLEY VIEW, OH 44125
- BUILDING AT 7919 OLD ROCKSIDE RD, CLEVELAND, OH 44125
- EXISTING/RELOCATED GAS LINE ALONG THE NORTH SIDE OF OLD ROCKSIDE RD
- EXISTING/RELOCATED WATER LINE SOUTH OF OLD ROCKSIDE RD

MONITOR GROUND VIBRATIONS CAUSED BY PILE DRIVING TO MINIMIZE THE POTENTIAL DAMAGE TO EXISTING STRUCTURES.

RETAIN AN EXPERIENCED VIBRATION SPECIALIST TO ESTABLISH THE ACCEPTABLE VIBRATION LIMITS AND TO PERFORM THE VIBRATION MONITORING. USE A VIBRATION SPECIALIST THAT IS AN EXPERT IN THE INTERPRETATION OF VIBRATION DATA, AND WHO MEETS ONE OF THE FOLLOWING CRITERIA: 1) IS A REGISTERED ENGINEER WITH AT LEAST TWO YEARS OF PROVEN EXPERIENCE IN MONITORING VIBRATIONS ON SIMILAR CONSTRUCTION PROJECTS, OR 2) HAS AT LEAST FIVE YEARS OF PROVEN EXPERIENCE IN MONITORING VIBRATIONS ON SIMILAR CONSTRUCTION PROJECTS. DO NOT USE A VIBRATION SPECIALIST THAT IS AN EMPLOYEE OF THE CONTRACTOR.

SUBMIT A RESUME OF THE CREDENTIALS OF THE PROPOSED VIBRATION SPECIALIST AT OR BEFORE THE PRECONSTRUCTION MEETING. INCLUDE IN THE RESUME A LIST OF CONSTRUCTION PROJECTS ON WHICH THE VIBRATION SPECIALIST WAS RESPONSIBLY IN CHARGE OF MONITORING THE VIBRATIONS. LIST A DESCRIPTION OF THE PROJECTS, WITH DETAILS OF THE VIBRATION INTERPRETATIONS MADE ON THE PROJECT. LIST THE NAMES AND TELEPHONE NUMBERS OF PROJECT OWNERS WITH SUFFICIENT KNOWLEDGE OF THE PROJECTS TO VERIFY THE SUBMITTED INFORMATION. OBTAIN THE ENGINEER'S ACCEPTANCE OF THE VIBRATION SPECIALIST BEFORE BEGINNING ANY PILE DRIVING WORK. ALLOW 30 DAYS FOR THE REVIEW OF THIS DOCUMENTATION.

USE SEISMOGRAPHS CAPABLE OF CONTINUOUSLY RECORDING THE PEAK PARTICLE VELOCITY FOR THREE MUTUALLY PERPENDICULAR COMPONENTS OF VIBRATION, AND OF PROVIDING A PERMANENT RECORD OF THE ENTIRE VIBRATION EVENT. USE A SUFFICIENT NUMBER OF SEISMOGRAPHS TO PROVIDE REDUNDANCY IN CASE ONE DEVICE SHOULD FAIL. SUBMIT A PLAN OF THE PROPOSED SEISMOGRAPH LOCATIONS TO THE ENGINEER FOR REVIEW.

THE VIBRATION SPECIALIST SHALL PERFORM THE FOLLOWING:

1. MEASURE THE AMBIENT GROUND VIBRATIONS NEAR EXISTING STRUCTURES BEFORE PILE DRIVING BEGINS.
2. ESTABLISH VIBRATION LIMITS TO MINIMIZE POTENTIAL DAMAGE TO EXISTING STRUCTURES AND EXPLAIN WHY THEY ARE BEING USED TO THE ENGINEER BEFORE DRIVING PILES NEAR EXISTING STRUCTURES.
3. MONITOR GROUND VIBRATIONS DURING PILE DRIVING.
4. IMMEDIATELY INFORM THE CONTRACTOR AND ENGINEER IF THE VIBRATION LIMITS ARE REACHED OR EXCEEDED.
5. FURNISH THE DATA RECORDED AND INCLUDE THE FOLLOWING:
   A. IDENTIFICATION OF SEISMOGRAPH.
   B. DISTANCE AND DIRECTION OF SEISMOGRAPH FROM PILE DRIVING.
   C. START TIME AND DURATION OF PILE DRIVING.
   D. LIST OF PILES DRIVEN DURING EACH MONITORING INTERVAL.

IMMEDIATELY SUSPEND ALL PILE DRIVING IF THE VIBRATION LIMITS ARE REACHED OR EXCEEDED. EVALUATE ALTERNATIVE CONSTRUCTION PROCEDURES, SUCH AS PREBORED HOLES, TO REDUCE THE VIBRATIONS.

SUBMIT THREE COPIES OF THE FINAL REPORT WHICH CONTAINS ALL MEASUREMENTS, INTERPRETATIONS, AND RECOMMENDATIONS TO THE ENGINEER.

THE COUNTY WILL PAY FOR THIS ITEM AT THE CONTRACT LUMP SUM PRICE FOR ITEM 208 - VIBRATION CONTROL AND MONITORING, AS PER PLAN. THE COUNTY WILL PAY THE FINAL TWENTY PERCENT AFTER THE ENGINEER RECEIVES THE FINAL REPORT.

THE COUNTY WILL PAY ACCORDING TO C&MS 109.05 FOR ALTERNATIVE CONSTRUCTION PROCEDURES THAT THE ENGINEER DETERMINES ARE NECESSARY TO REDUCE VIBRATIONS AND ARE NOT A CONTINGENCY QUANTITY IN THESE PLANS.

ITEM 503 - COFFERDAMS AND EXCAVATION BRACING, AS PER PLAN

THE DESIGN SHOWN ON THE PLANS FOR TEMPORARY SUPPORT OF ABUTMENT EXCAVATION IS ONE REPRESENTATIVE DESIGN THAT MAY BE USED TO CONSTRUCT THE PROJECT. THE CONTRACTOR MAY CONSTRUCT THE DESIGN SHOWN ON THE PLANS OR PREPARE AN ALTERNATE DESIGN TO SUPPORT THE SIDES OF EXCAVATIONS. IF CONSTRUCTING AN ALTERNATE DESIGN FOR TEMPORARY SUPPORT OF EXCAVATION, PREPARE AND PROVIDE PLANS IN ACCORDANCE WITH CMS 501.05. THE COUNTY WILL PAY FOR THE TEMPORARY SUPPORT OF EXCAVATION AT THE CONTRACT LUMP SUM PRICE FOR ITEM 503 - COFFERDAMS AND EXCAVATION BRACING, AS PER PLAN. NO ADDITIONAL PAYMENT WILL BE MADE FOR PROVIDING AN ALTERNATE DESIGN.

ITEM 503 - UNCLASSIFIED EXCAVATION, AS PER PLAN

ALL PROVISIONS OF CMS 503 SHALL APPLY EXCEPT THAT THE USE OF SLAG AS BACKFILL MATERIAL IN ANY FORM (503.08, 203.02.R, AND 703.16) IS NOT PERMITTED.

THE BACKFILL MATERIAL SHALL BE MATERIAL CONFORMING TO CMS 703.17 (CMS 304 MATERIAL) AND MEET THE COMPACTION REQUIREMENTS OF CMS 304.05. IN ADDITION, THE BACKFILL MATERIAL SHALL BE PLACED AND COMPACTED IN 6" LIFTS.

ITEM 507 - 14" CAST-IN PLACE REINFORCED CONCRETE PILES, DRIVEN, AS PER PLAN

PILE DRIVING PROCEDURES SHALL CONSIDER VIBRATIONS TRANSMITTED TO ADJACENT BUILDINGS AND ALTERED AS NECESSARY TO REDUCE PEAK PARTICLE VELOCITY AT NO ADDITIONAL COST TO THE COUNTY. A CONTINGENCY QUANTITY OF 300 FEET HAS BEEN INCLUDED IN THE ESTIMATED QUANTITIES.

ITEM 507 - 14" CAST-IN-PLACE REINFORCED CONCRETE PILES, FURNISHED, AS PER PLAN

STEEL PIPE SHALL BE ASTM A252, GRADE 2 YIELD STRENGTH 35 KSI (14" DIAMETER CAST-IN-PLACE REINFORCED CONCRETE PILES).

THIS ITEM SHALL INCLUDE SPLICES AND SHALL BE USED WHEN PREBORING IS REQUIRED AND THE PILE NEEDS TO BE LENGTHENED TO OBTAIN THE ULTIMATE BEARING VALUE SPECIFIED. A CONTINGENCY QUANTITY OF 300 FEET HAS BEEN INCLUDED IN THE ESTIMATED QUANTITIES.

ITEM 507 - PREBORED HOLES, AS PER PLAN

IF THE VIBRATION LEVELS ON THE STRUCTURES BEING MONITORED DURING PILE DRIVING OPERATIONS EXCEED THE ALLOWABLE PEAK PARTICLE VELOCITY LIMITS DETERMINED BY THE VIBRATION SPECIALIST, PREBORED HOLES MAY BE USED AT THE DIRECTION OF THE VIBRATION SPECIALIST AND THE ACCEPTANCE OF THE ENGINEER. THE DIAMETER OF THE PREBORED HOLE SHALL NOT BE LESS THAN THE DIAMETER OF THE PILE NOR GREATER THAN 2 INCHES MORE THAN THE PILE DIAMETER. A CONTINGENCY QUANTITY OF 300 FEET HAS BEEN INCLUDED IN THE ESTIMATED QUANTITIES. MEASUREMENT AND PAYMENT WILL BE ACCORDING TO CMS ITEM 507.

ITEM 509 - EPOXY COATED REINFORCING STEEL, AS PER PLAN

IN ADDITION TO THE PROVISIONS OF ITEM 509, FIELD BEND AND/OR FIELD CUT THE REINFORCING STEEL DESIGNATED IN THE PLANS, AS NECESSARY, IN ORDER TO MAINTAIN THE REQUIRED CLEARANCES AND BAR SPACINGS. REPAIR ALL DAMAGE TO THE EPOXY COATING, AS A RESULT OF THIS WORK, ACCORDING TO 709.00.

ITEM 510 - DOWEL HOLES WITH NONSHRINK, NONMETALLIC GROUT, AS PER PLAN

THIS WORK INCLUDES THE DRILLING OF THE HOLES INTO THE CONCRETE AND FURNISHING AND PLACING EPOXY GROUT INTO THE HOLES FOR BOTH THE ABUTMENT REINFORCING AND BEARING ANCHOR RODS.

PRIOR TO DRILLING DOWEL HOLES, THE CONTRACTOR SHALL LOCATE ALL REINFORCING STEEL BARS IN THE AREA OF THE HOLE WITH THE AID OF A REINFORCING STEEL BAR LOCATOR, SUCH AS A PACHOMETER.

THE CONTRACTOR SHALL DEMONSTRATE HIS ABILITY TO DRILL THE DOWEL HOLES WITHOUT DAMAGING THE SURROUNDING CONCRETE. SHOULD SUCH DAMAGE OCCUR, THE CONTRACTOR IS DIRECTED TO REPAIR THE DAMAGE AT HIS EXPENSE AND TO CORE DRILL THE REMAINING HOLES. DEPTH OF HOLES SHALL BE AT LEAST 16 TIMES THE DOWEL DIAMETER UNLESS OTHERWISE SHOWN ON THE PLANS.

PAYMENT FOR DRILLING HOLES AND FURNISHING AND PLACING MATERIALS SHALL BE INCLUDED IN THE CONTRACT BID PRICE FOR ITEM:

ITEM	UNITS	DESCRIPTION
510	EACH	DOWEL HOLES WITH NONSHRINK, NONMETALLIC GROUT, AS PER PLAN

PILES DRIVEN TO FULL ESTIMATED LENGTH WITH PILE/SOIL SETUP

THE ULTIMATE BEARING VALUE (UBV) IS 240 KIPS PER PILE FOR THE 12" CAST-IN-PLACE REINFORCED CONCRETE REAR AND FORWARD ABUTMENT PILES. PART OF THE UBV WILL BE ACHIEVED THROUGH PILE/SOIL SETUP, WHICH IS A TIME DEPENDENT INCREASE IN RESISTANCE THAT OCCURS IN SOME SOILS.

NOTIFY THE ENGINEER AT LEAST 5 DAYS BEFORE DRIVING PILES SO THAT THE ENGINEER CAN NOTIFY THE DISTRICT GEOTECHNICAL ENGINEER, THE OFFICE OF CONSTRUCTION ADMINISTRATION, AND THE OFFICE OF GEOTECHNICAL ENGINEERING.

DRIVE THE FIRST TWO PILES AT THE REAR AND FORWARD ABUTMENT TO THE FULL ESTIMATED LENGTH OF 70 FEET AND 65 FEET RESPECTIVELY. PERFORM DYNAMIC LOAD TESTING ON BOTH PILES WHILE DRIVING. AFTER DRIVING AND TESTING THE FIRST TWO PILES, DRIVE THE REMAINING PILES IN THE SUBSTRUCTURE TO THE SAME DEPTH AS THE FIRST TWO PILES. AFTER DRIVING ALL PILES TO THE ESTIMATED LENGTH, CEASE ALL DRIVING OPERATIONS AT THE SUBSTRUCTURE FOR A PERIOD OF 14 DAYS. INCLUDE THE WAITING PERIOD AS A SEPARATE ACTIVITY IN THE PROGRESS SCHEDULE. AFTER THE WAITING PERIOD, PERFORM PILE RESTRIKES ON BOTH OF THE FIRST TWO PILES (ONE RESTRIKE ITEM).

SUBMIT ALL TEST RESULTS TO THE ENGINEER. IF THE RESTRIKE TEST RESULTS INDICATE THAT BOTH PILES ACHIEVED THE REQUIRED UBV, ALL PILES IN THE SUBSTRUCTURE MAY BE ACCEPTED BY THE ENGINEER.

IF THE RESTRIKE TEST RESULTS INDICATE THAT EITHER OF THE TWO PILES DID NOT ACHIEVE THE REQUIRED UBV, IMMEDIATELY NOTIFY THE ENGINEER SO THAT THE ENGINEER CAN NOTIFY THE DISTRICT GEOTECHNICAL ENGINEER, THE OFFICE OF CONSTRUCTION ADMINISTRATION, AND THE OFFICE OF GEOTECHNICAL ENGINEERING. THE ENGINEER WILL REVIEW THE TEST RESULTS AND ESTABLISH ADDITIONAL RESTRIKE TESTING OR DRIVING CRITERIA FOR THE PILING IN THE SUBSTRUCTURE WITH THE ASSISTANCE OF THE DISTRICT GEOTECHNICAL ENGINEER, THE OFFICE OF CONSTRUCTION ADMINISTRATION, AND THE OFFICE OF GEOTECHNICAL ENGINEERING.

IF DIRECTED BY THE ENGINEER, PERFORM ADDITIONAL RESTRIKE TESTING OR DRIVE ALL PILES IN THE SUBSTRUCTURE TO THE ESTABLISHED DRIVING CRITERIA. THE DEPARTMENT WILL PAY FOR SPLICING OF THE PILES BEYOND THE ESTIMATED LENGTH PROVIDED IN THE PLANS UNDER C&MS 109.05 WITH A NEGOTIATED PRICE PER SPLICE.

THIS PLAN NOTE INCLUDES A QUANTITY OF ONE EACH ITEM 523 DYNAMIC LOAD TESTING, AS PER PLAN AND A QUANTITY OF ONE EACH ITEM 523 RESTRIKE, AS PER PLAN PER EACH SUBSTRUCTURE UNIT.

P:\PR57030\Cadd\Sheets\ORR_91563_TEMP_SN003.dwg 03-Nov-21 1:39 PM

DESIGN AGENCY
BURGESS & NIPLE
100 WEST ERIE STREET
PAINESVILLE, OHIO 44077

DESIGNED	DRAWN	REVIEWED	DATE
RMP	RMP	DWL	09/2021
CHECKED	REVISED	STRUCTURE FILE NUMBER	
JAA			

STRUCTURE NOTES 3 OF 4
TEMPORARY BRIDGE 00.42 T
OVER CUYAHOGA RIVER

CUY - OLD
ROCKSIDE ROAD

ITEM 511 - CLASS QC1 CONCRETE WITH QC/QA, ABUTMENT INCLUDING FOOTINGS, AS PER PLAN:

ALL COARSE AGGREGATE SHALL HAVE AN ABSORPTION OF 1.00% OR GREATER AS DEFINED BY ASTM C127.

BASIS OF PATMENT: PAYMENT FOR THE ABOVE COMPLETED AND ACCEPTED QUANTITIES WILL BE MADE AT THE CONTRACT ID PRICE FOR:

ITEM	UNITS	DESCRIPTION
511	CU YD	CLASS QC1 CONCRETE WITH QC/QA, ABUTMENT INCLUDING FOOTING, AS PER PLAN

ITEM 513 - STRUCTURAL STEEL, MISC.: BEARING RESTRAINT

WORK INCLUDED UNDER THIS ITEM SHALL BE THE FURNISHING, INSTALLATION, AND PLACEMENT OF GALVANIZED STRUCTURAL STEEL GUIDE ANGLES, AND ALL STEEL ADHESIVE ANCHOR BOLTS. ANCHOR BOLTS SHALL BE GALVANIZED STEEL AND SHALL HAVE A MINIMUM YIELD STRENGTH OF 75 KSI.

ITEM 518 - POROUS BACKFILL WITH GEOTEXTILE FABRIC, AS PER PLAN

POROUS BACKFILL WITH GEOTEXTILE FABRIC, AS PER PLAN SHALL BE 2 FEET THICK AND EXTENDED UP TO 1 FOOT BELOW THE EMBANKMENT SURFACE AND LATERALLY TO THE WINGWALLS. TURN GEOTEXTILE FABRIC UP TO 6 INCHES AGAINST ABUTMENT OR WINGWALL.

MATERIAL FOR POROUS BACKFILL SHALL BE LIMITED TO STONE. USE OF SLAG, IN ANY FORM, IS NOT PERMITTED.

ITEM 526 - REINFORCED CONCRETE APPROACH SLABS (T = 15"), AS PER PLAN

CONCRETE SHALL BE ITEM 511 - CLASS QC2 CONCRETE WITH QC/QA, BRIDGE DECK, AS PER PLAN.

ITEM SPECIAL - STRUCTURES: PROTECTION OF FACILITIES

THIS ITEM SHALL CONSIST OF FURNISHING ALL NECESSARY LABOR, MATERIALS, AND EQUIPMENT TO PROTECT EXISTING FACILITIES AS APPROVED AND DIRECTED BY THE ENGINEER DURING CONSTRUCTION.

THE CONTRACTOR IS REMINDED THAT ALL EXISTING COMPONENTS AND SYSTEMS ARE TO REMAIN IN USE DURING AND AFTER THIS PROJECT AND REQUIRE PROTECTION. THIS WORK INCLUDES, BUT IS NOT LIMITED TO:

1. FIBER OPTIC CABLES
2. CUYAHOGA VALLEY NATIONAL PARK PROPERTY
3. DRIVEWAYS TO CVSR PARKING LOT, THORNBURG STATION PARKING LOT, AND OTHER BUSINESSES

IT IS THE CONTRACTOR'S RESPONSIBILITY TO PROTECT THESE SYSTEMS AND COMPONENTS FOR THE DURATION OF THE CONTRACT. THE CONTRACTOR IS DIRECTED TO SECTION 107 AND PARTICULARLY TO SECTION 107.12 OF THE CONSTRUCTION AND MATERIAL SPECIFICATIONS.

PAYMENT SHALL BE MADE AT THE LUMP SUM PRICE BID FOR ITEM SPECIAL - STRUCTURES: PROTECTION OF FACILITIES. THIS SHALL INCLUDE ALL NECESSARY TOOLS, LABOR, EQUIPMENT, AND MATERIALS NECESSARY TO SUCCESSFULLY PERFORM THIS ITEM OF WORK.

ITEM SPECIAL - STRUCTURES: PRECONSTRUCTION CONDITION SURVEY

BEFORE PILE DRIVING BEGINS, CONDUCT A CONDITION SURVEY OF ANY EXISTING BUILDING, STRUCTURE, OR UTILITY WITHIN 200 FEET OF THE PILE DRIVING WORK. THE PURPOSE OF THE SURVEY IS TO DOCUMENT THE CONDITION OF THE BUILDING, STRUCTURE, OR UTILITY PRIOR TO PILE DRIVING, SO THAT ANY CLAIMS OF DAMAGE CAUSED BY THE PILE DRIVING CAN BE VERIFIED.

RETAIN AN EXPERIENCED VIBRATION SPECIALIST TO PERFORM OR SUPERVISE THE CONDITION SURVEY. USE A VIBRATION SPECIALIST THAT MEETS THE REQUIREMENTS LISTED IN ITEM 208 - VIBRATION CONTROL AND MONITORING, AS PER PLAN.

RECORD THE CONDITION OF EXISTING STRUCTURES AND BUILDING MATERIALS USING WRITTEN TEXT, PHOTOGRAPHS, AND VIDEO RECORDINGS. INSPECT INTERIOR WALLS, CEILINGS, AND FLOORS THAT ARE ACCESSIBLE. INSPECT THE EXTERIOR OF THE BUILDING THAT IS VISIBLE FROM GROUND LEVEL. ALSO RECORD THE LOCATION, SIZE, AND TYPE OF ALL CRACKS AND OTHER STRUCTURAL DEFICIENCIES.

IF OWNERS OR OCCUPANTS FAIL TO ALLOW ACCESS TO THE PROPERTY FOR THE PRECONSTRUCTION CONDITION SURVEY, SEND A CERTIFIED LETTER TO THE OWNER OR OCCUPANT. DOCUMENT THE NOTIFICATION EFFORT AND THE CERTIFIED LETTER IN THE REPORT.

SUBMIT A REPORT TO THE ENGINEER THAT SUMMARIZES THE PRECONSTRUCTION CONDITION OF THE BUILDINGS, STRUCTURES, AND UTILITIES, AND THAT IDENTIFIES AREAS OF CONCERN. SUBMIT THREE COPIES OF THE REPORT.

THE COUNTY WILL PAY FOR THIS ITEM AT THE CONTRACT LUMP SUM PRICE FOR ITEM SPECIAL - STRUCTURES: PRECONSTRUCTION CONDITION SURVEY.

P:\PR57030\Cadd\Sheets\ORR_91563_TEMP_SN004.dwg 13-Sep-21 11:11 AM

DESIGN AGENCY
BURGESS & NIPLE
100 WEST ERIE STREET
PAINESVILLE, OHIO 44077

DESIGNED	DRAWN	REVIEWED	DATE
RMP	RMP	DWL	09/2021
CHECKED	REVISED	STRUCTURE FILE NUMBER	
JAA			

STRUCTURE NOTES 4 OF 4
TEMPORARY BRIDGE 00.42 T
OVER CUYAHOGA RIVER

CUY - OLD
ROCKSIDE ROAD

ITEM 502 - STRUCTURE FOR MAINTAINING TRAFFIC, AS PER PLAN

DESCRIPTION. THIS WORK CONSISTS OF PREPARING SUPERSTRUCTURE PLANS, PROVIDING, INSTALLING, MAINTAINING AND SUBSEQUENTLY REMOVING THE TEMPORARY STRUCTURE FROM THE CONSTRUCTION SITE.

DESIGN AND CONSTRUCTION. TEMPORARY STRUCTURE SHALL BE SINGLE SPAN ACROW BRIDGE SYSTEM OR AN APPROVED EQUAL THAT COMPLIES WITH THE PLAN PROVISIONS. NO PIERS SHALL BE PLACED IN THE CUYAHOGA RIVER. LIVE LOAD DEFLECTION SHALL NOT EXCEED L/800. DESIGN CALCULATIONS WILL BE PREPARED, SIGNED, SUBMITTED AND SEALED BY AN OHIO REGISTERED PROFESSIONAL ENGINEER AND PROVIDED BY THE CONTRACTOR/SUPPLIER. THE CONTRACTOR/SUPPLIER WILL PROVIDE A QUALIFICATION OF THE REMAINING BRIDGE FATIGUE DESIGN LIFE TO ENSURE SERVICE THROUGH THE DURATION REQUIRED FOR THE PROJECT.

PROVIDE A CLEAR ROADWAY WIDTH OF AT LEAST 24 FEET MEASURED FACE TO FACE OF GUARDRAILS. BRIDGE RAILINGS SHALL PROVIDE TL-3 OR HIGHER PERFORMANCE PER NCHRP REPORT 350 WITH CONTINUOUS CONNECTING TRANSITIONS TO THE APPROACH PORTABLE BARRIER. DESIGN THE TEMPORARY STRUCTURE ACCORDING TO AASHTO LRFD BRIDGE DESIGN SPECIFICATIONS AND THE ODOT BRIDGE DESIGN MANUAL WITH A DESIGN LIVE LOADING OF HL-93 AND ALL CRANE VEHICLES ACCORDING TO THE TEMPORARY BRIDGE PLANS IN THE CONSTRUCTION DOCUMENTS.

STRUCTURAL STEEL SHALL CONFORM TO CMS ITEM 513, SECTIONS 513.11, 513.19, 513.20, 513.21, 513.25, AND 513.26, EXCEPT SHOP DRAWINGS WILL NOT BE REQUIRED. PANEL CONNECTING PINS SHALL BE NEW ASTM A193 GRADE B7 AND BOLTS SHALL BE NEW ASTM A325 AND SHALL BE GALVANIZED. STRUCTURAL STEEL NEED NOT BE PAINTED. SUBMIT WORKING DRAWINGS IN ACCORDANCE WITH CMS 501.05.

SUBSTITUTION. ALTERNATE BRIDGE SYSTEMS TO THE SPECIFIED ACROW PANEL BRIDGE MUST BE SUPPORTED BE CALCULATIONS AND DRAWINGS PROVIDED BY THE CONTRACTOR AND APPROVED BY THE ENGINEER PRIOR TO THE START OF CONSTRUCTION. ALL COSTS OF ALTERNATIVE BRIDGE SYSTEM SHALL BE BORNE BY THE CONTRACTOR.

FOUNDATIONS. CONSTRUCT THE ABUTMENTS AS SHOWN ON THE PLANS. COORDINATE SUPERSTRUCTURE LOAD INFORMATION AND ABUTMENT CONNECTION DETAILS WITH THE CONTRACTOR. DRIVE PILING TO SUFFICIENT PENETRATION TO CARRY THE SUPERIMPOSED LOADS ACCORDING TO CMS ITEM 507 AND THESE PLANS, BUT NOT LESS THAN 120 TONS PER PILE OR SHORTER THAN PLAN LENGTH. PERFORM DYNAMIC LOAD TESTING TO DETERMINE THE REQUIRED BLOW COUNT IF PILES ARE NOT DRIVEN TO ROCK. ALL COSTS FOR REDESIGN OF THE ABUTMENTS TO ACCOMMODATE AN ALTERNATE BRIDGE SYSTEM SHALL BE BORNE BY THE CONTRACTOR. ALTERNATE DESIGNS WILL BE SUBJECT TO THE APPROVAL OF THE ENGINEER. CONCRETE FINISHING REQUIREMENTS ARE WAIVED.

DELIVERY AND ERECTION. PROVIDE DAILY TECHNICAL ASSISTANCE FROM THE SUPPLIER TO ASSIST THE CONTRACTOR DURING ASSEMBLY, INSTALLATION, REMOVAL AND RETURN OF THE BRIDGE. ROLL THE TEMPORARY BRIDGE IN PLACE BY MEANS OF CANTILEVERED LAUNCH. LAUNCHING NOSE AND ROLLERS ARE INCLUDED IN THIS ITEM. THE USE OF CONSTRUCTION EQUIPMENT ON THE TEMPORARY BRIDGE SHALL BE APPROVED IN ADVANCE BY THE BRIDGE SUPPLIER AND THE ENGINEER.

MAINTENANCE. MAINTAIN ALL PORTIONS OF THE TEMPORARY STRUCTURE IN GOOD CONDITION WITH REGARD TO STRENGTH, SAFETY AND RIDEABILITY. THE CONTRACTOR IS RESPONSIBLE FOR DAMAGES CAUSED BY UPSTREAM FLOODING DUE TO THE ACCUMULATION OF DEBRIS OR SEDIMENT IN THE CHANNEL. THE COUNTY WILL CONSIDER THIS MAINTENANCE TO BE INCIDENTAL TO ITEM 614 - MAINTAINING TRAFFIC. MAINTAIN THE WATERWAY OPENING SHOWN ON THE PLANS AT ALL TIMES. IF DEBRIS ACCUMULATES WITHIN THE WATERWAY OPENING OR ON ANY PART OF THE STRUCTURE PROMPTLY REMOVE DEBRIS. THE COUNTY WILL COMPENSATE FOR DEBRIS REMOVAL ACCORDING TO C&MS 109.05.

CLOSING OF THE TEMPORARY STRUCTURE. IF FOR ANY REASON OR AT ANY TIME THE TEMPORARY STRUCTURE'S ABILITY TO SAFELY CARRY TRAFFIC IS IN QUESTION, IMMEDIATELY TAKE THE ACTIONS NECESSARY TO PROTECT TRAFFIC, REPAIR AND REOPEN THE TEMPORARY STRUCTURE. WHEN CLOSING A TEMPORARY STRUCTURE FOR THIS PURPOSE, IMMEDIATELY NOTIFY THE ENGINEER AND THE APPROPRIATE LAW ENFORCEMENT AGENCY AND MUNICIPAL AGENCIES. WATER ELEVATION EXCEEDING THE DESIGN (25) YEAR HIGHWATER ELEVATION OR AN EXCESSIVE ACCUMULATION OF DEBRIS WITHIN THE WATERWAY OPENING SHALL BE SUFFICIENT REASONS TO CLOSE THE TEMPORARY STRUCTURE. MARK THE DESIGN (25) YEAR HIGHWATER ELEVATION WITH FLUORESCENT PAINT ON THE TEMPORARY STRUCTURE AT A VISIBLE LOCATION. THE COUNTY WILL CONSIDER THE COSTS ASSOCIATED WITH CLOSING THE TEMPORARY STRUCTURE TO BE INCIDENTAL TO ITEM 614 - MAINTAINING TRAFFIC.

REMOVAL. WHEN THE TEMPORARY STRUCTURE IS NO LONGER NEEDED, TAKE OWNERSHIP AND REMOVE IT FROM THE SITE ACCORDING TO ITEM 202 AS MODIFIED BY THE PLAN PROVISIONS.

BASIS OF PAYMENT. THE TEMPORARY STRUCTURE WILL BE PAID FOR AND CARRIED TO THE GENERAL SUMMARY UNDER ONE LUMP SUM BID ITEM - ITEM 502 - STRUCTURE FOR MAINTAINING TRAFFIC, AND THE TABLE CONTAINING ESTIMATED QUANTITIES IS "FOR ESTIMATING PURPOSES ONLY". PAYMENT IS FULL COMPENSATION FOR DESIGN, DELIVERY, ERECTION, INSTALLATION, PRECONSTRUCTION CONDITION SURVEY, VIBRATION CONTROL AND MONITORING, TECHNICAL ASSISTANCE, MAINTENANCE, PERFORMING DYNAMIC LOAD TESTING, REMOVAL, AND ALL MISCELLANEOUS ITEMS NECESSARY FOR INSTALLATION, MAINTENANCE, AND SUBSEQUENT REMOVAL OF THE TEMPORARY STRUCTURE.

THE COUNTY WILL PAY FOR ACCEPTED QUANTITIES AT THE LUMP SUM CONTRACT PRICE AS FOLLOWS:

ITEM	UNIT	DESCRIPTION
502	LUMP SUM	STRUCTURE FOR MAINTAINING TRAFFIC, AS PER PLAN

ESTIMATED QUANTITIES (FOR ESTIMATING PURPOSES ONLY, PAYMENT FOR ALL ITEMS SHALL BE INCLUDED IN ITEM 502 - STRUCTURE FOR MAINTAINING TRAFFIC, AS PER PLAN)

ITEM	ITEM EXT.	TOTAL	UNIT	DESCRIPTION	REF. SHEET
SPECIAL	20365000	4	EACH	SETTLEMENT PLATFORMS	3/18
208	14001	LS	-	VIBRATION CONTROL AND MONITORING, AS PER PLAN	4/18
503	11101	LS	-	COFFERDAMS AND EXCAVATION BRACING, AS PER PLAN	4/18
503	21301	LS	-	UNCLASSIFIED EXCAVATION, AS PER PLAN	4/18
505	11100	LS	-	PILE DRIVING EQUIPMENT MOBILIZATION	
507	00601	1920	FT	14" CAST-IN-PLACE REINFORCED CONCRETE PILES, DRIVEN, AS PER PLAN	4/18
507	00651	2040	FT	14" CAST-IN-PLACE REINFORCED CONCRETE PILES, FURNISHED, AS PER PLAN	4/18
507	92201	300	FT	PREBORED HOLES, AS PER PLAN	4/18
509	10001	6950	LBS	EPOXY COATED REINFORCING STEEL, AS PER PLAN	4/18
510	10001	132	EACH	DOWEL HOLES WITH NONSHRINK, NONMETALLIC GROUT, AS PER PLAN	4/18
511	43513	68	CY	CLASS QC1 CONCRETE WITH QC/QA, ABUTMENT INCLUDING FOOTINGS, AS PER PLAN	5/18
512	44400	23	SY	TYPE B WATERPROOFING	
513	90000	155	LB	STRUCTURAL STEEL, MISC.: BEARING RESTRAINTS	5/18
518	21201	26	CY	POROUS BACKFILL WITH GEOTEXTILE FABRIC, AS PER PLAN	5/18
518	40000	68	FT	6" PERFORATED CORRUGATED PLASTIC PIPE	
518	40012	60	FT	6" NON-PERFORATED CORRUGATED PLASTIC PIPE	
523	20001	2	EACH	DYNAMIC LOAD TESTING, AS PER PLAN	4/18
523	20501	2	EACH	RESTRICKE, AS PER PLAN	4/18
526	25001	150	SY	REINFORCED CONCRETE APPROACH SLABS (T=15"), AS PER PLAN	5/18
SPECIAL	53000200	LS	-	STRUCTURES: SUPERSTRUCTURE AND BEARING RENTAL	
SPECIAL	53000200	LS	-	STRUCTURES: PROTECTION OF FACILITIES	5/18
SPECIAL	53000200	LS	-	STRUCTURES: PRECONSTRUCTION CONDITION SURVEY	5/18
625	33000	1	EACH	STRUCTURE GROUNDING SYSTEM	

DESIGN AGENCY
BURGESS & NIPLE
100 WEST ERIE STREET
PAINESVILLE, OHIO 44077

DESIGNED KMA | DRAWN KMA | REVIEWED DWL | DATE 09/2021 | CHECKED JAA | REVISED | STRUCTURE FILE NUMBER

ESTIMATED QUANTITIES
TEMPORARY BRIDGE 00.42 T
OVER CUYAHOGA RIVER

CUY - OLD
ROCKSIDE ROAD

P:\PR57030\Cadd\Sheets\ORR_91653_TEMP_SQ001.dwg 13-Sep-21 11:12 AM

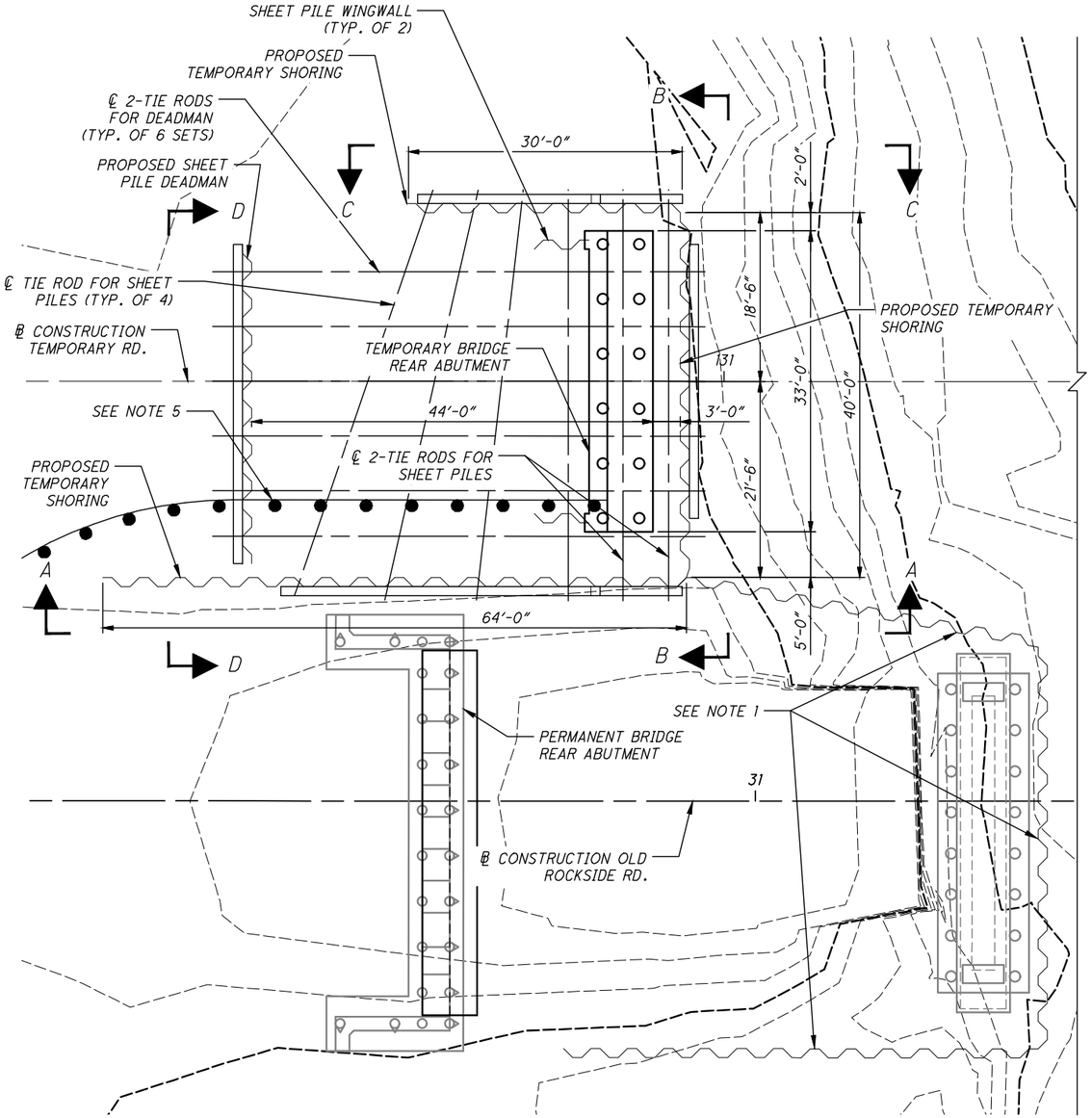

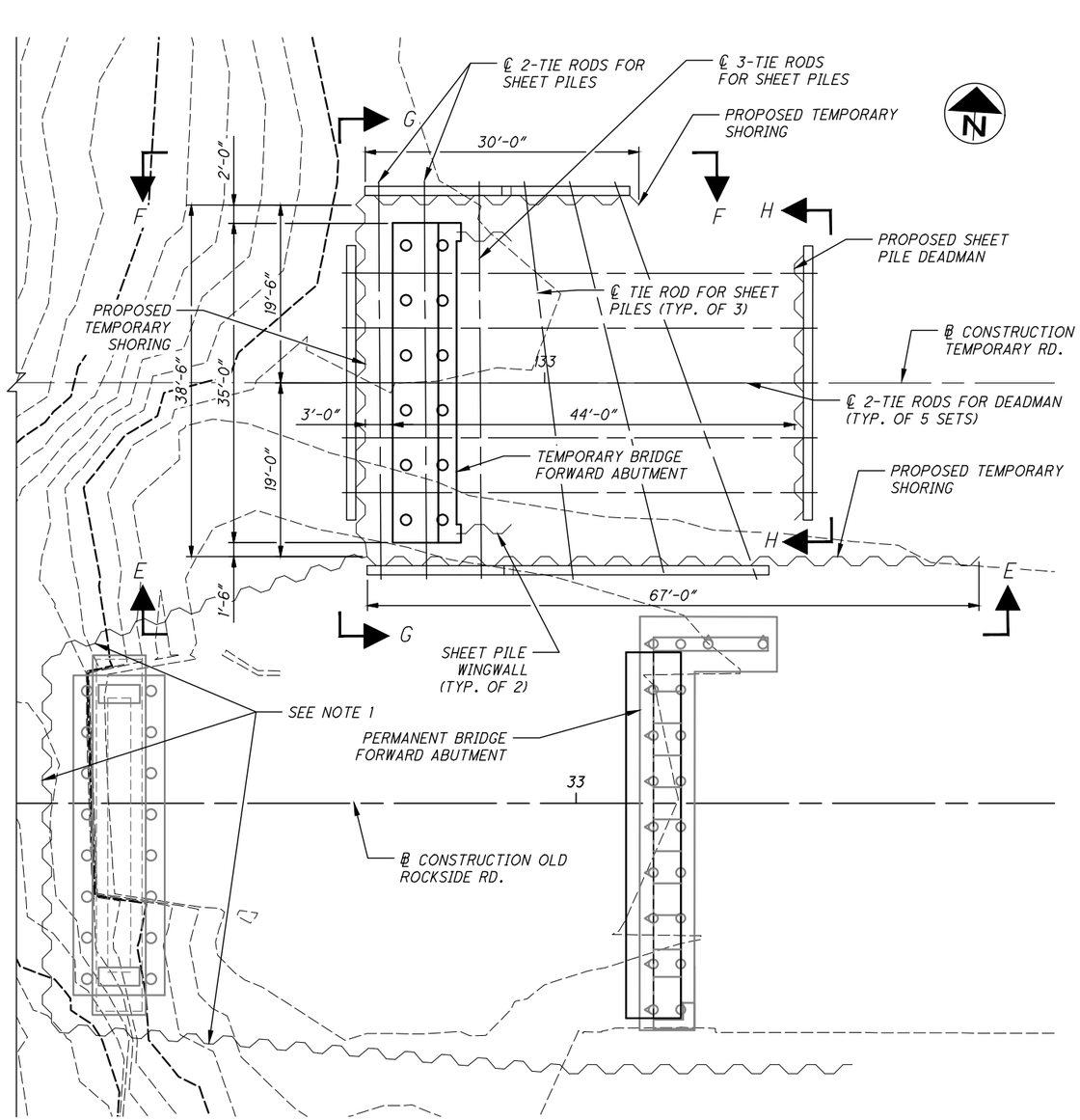

SEQUENCE OF CONSTRUCTION

1. PLACE FILL SOIL FOR THE TEMPORARY ROAD AND BRIDGE AND WAIT THE REQUIRED AMOUNT OF TIME PER THE SETTLEMENT GUIDELINES
2. DRIVE PROPOSED TEMPORARY SHORING
3. DRIVE SHEET PILE DEADMAN
4. INSTALL 14" DIAMETER C-I-P REINFORCED CONCRETE PILES FOR TEMPORARY STRUCTURE
5. INSTALL WALERS AND TIE RODS FOR THE SHEET PILE DEADMAN AND PROPOSED TEMPORARY SHORING, EXCAVATING SOIL AS NECESSARY TO ACCESS ATTACHMENT POINTS FOR LOWER WALERS
6. BACKFILL SOIL FOR TEMPORARY ROAD AND STRUCTURE
7. INSTALL GUARDRAIL AND BARRIERS

TEMPORARY SHORING PLAN

NOTES

1. SHORING USED FOR THE CONSTRUCTION OF THE PERMANENT BRIDGE IS INCLUDED IN THE PERMANENT BRIDGE ITEM 503 - COFFERDAMS AND EXCAVATION BRACING. SEE SHEETS 9/44 AND 10/44 FOR DETAILS.
2. SHEETING, TIE RODS, WALERS, DEADMAN AND OTHER DETAILS ON THIS SHEET ARE INCLUDED IN THE TEMPORARY BRIDGE ITEM 503 - COFFERDAMS AND EXCAVATION BRACING, AS PER PLAN.
3. SEE SHEET 8/18 FOR VIEWS A-A THROUGH D-D AND SHEET 9/18 FOR VIEWS E-E THROUGH H-H.
4. SEE SHEET 10/18 FOR WALER AND TIE ROD DETAILS.
5. CONTRACTOR TO LOCATE GUARDRAIL POSTS AND TIE RODS PRIOR TO INSTALLATION TO AVOID CONFLICTS. CONTACT THE ENGINEER IF TIE ROD LOCATIONS OR POST LOCATIONS NEED TO BE MODIFIED FROM THE PLANS OR STANDARDS.

DESIGN AGENCY
BURGESS & NIPLE
100 WEST ERIE STREET
PAINESVILLE, OHIO 44077

DESIGNED	DRAWN	REVIEWED	DATE
KMA	KMA	DWL	09/2021
CHECKED	REVISED	STRUCTURE FILE NUMBER	
JAA			

TEMPORARY SHORING PLAN
TEMPORARY BRIDGE 00.42 T
OVER CUYAHOGA RIVER

CUY - OLD ROCKSIDE ROAD

7 / 18

87 / 157

P:\PR57030\Cadd\Sheets\ORR_91563_TEMP_SH002.dwg 13-Sep-21 11:12 AM

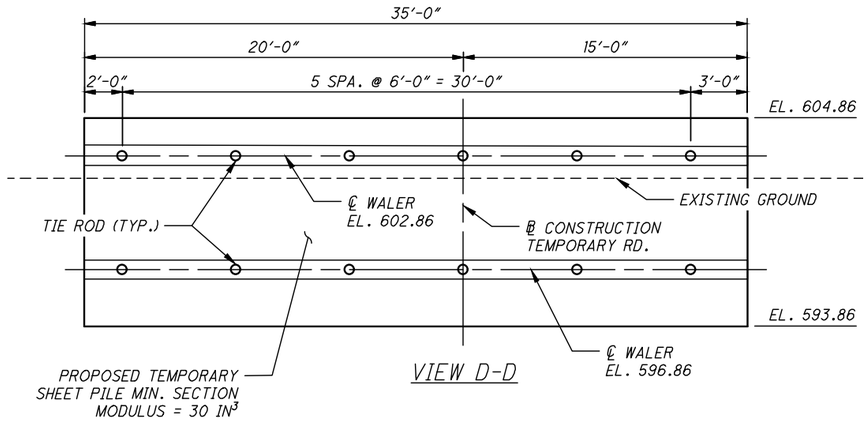

VIEW D-D

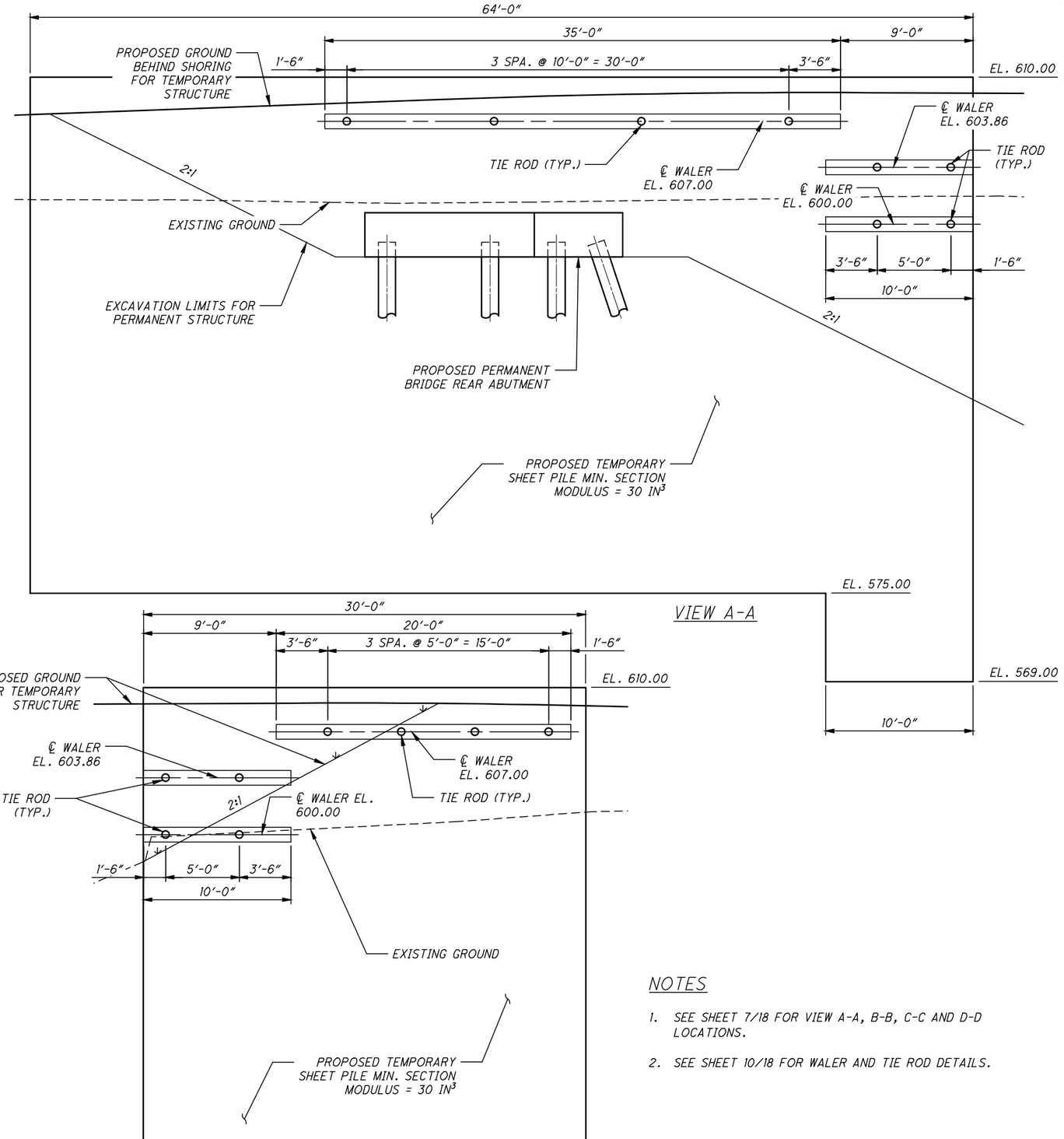

VIEW A-A

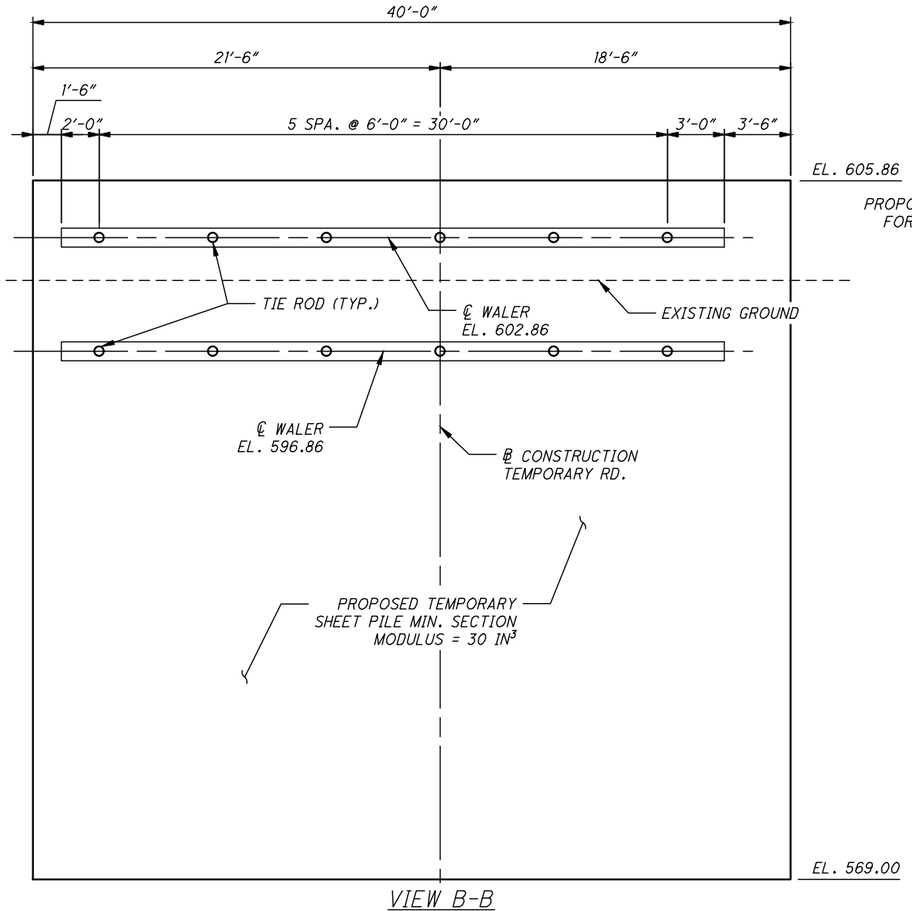

VIEW B-B

VIEW C-C

NOTES

1. SEE SHEET 7/18 FOR VIEW A-A, B-B, C-C AND D-D LOCATIONS.
2. SEE SHEET 10/18 FOR WALER AND TIE ROD DETAILS.

DESIGN AGENCY
BURGESS & NIPLE
100 WEST ERIE STREET
PAINESVILLE, OHIO 44077

DESIGNED	DRAWN	REVIEWED	DATE
KMA	KMA	DWL	09/2021
CHECKED	REVISED	STRUCTURE FILE NUMBER	
JAA			

REAR ABUTMENT TEMPORARY SHORING DETAILS
TEMPORARY BRIDGE 00.42 T
OVER CUYAHOGA RIVER

CUY - OLD ROCKSIDE ROAD

8 / 18

88
157

P:\PR57030\Cadd\Sheets\ORR_91563_TEMP_SH001.dwg 13-Sep-21 11:13 AM

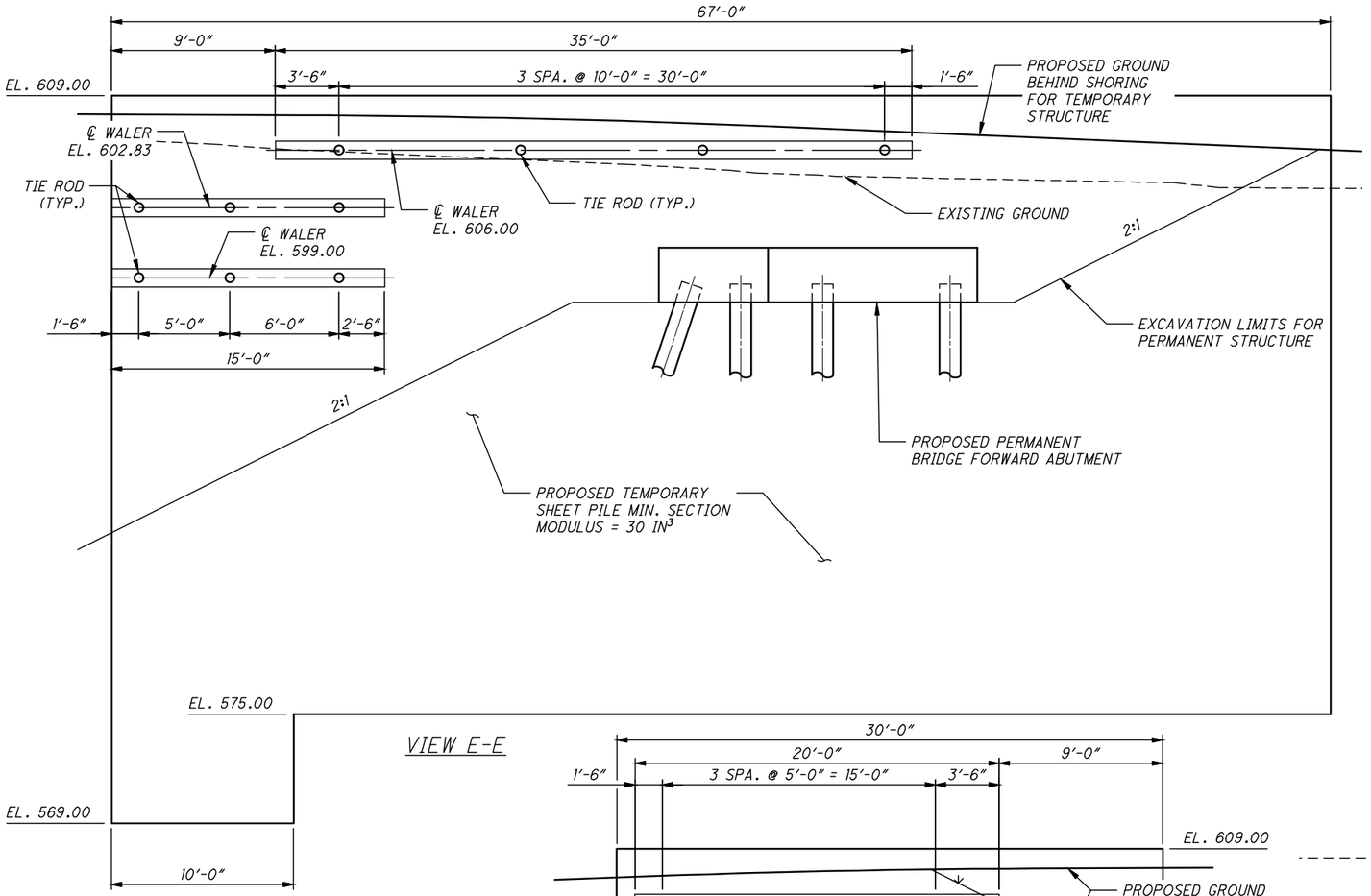

VIEW E-E

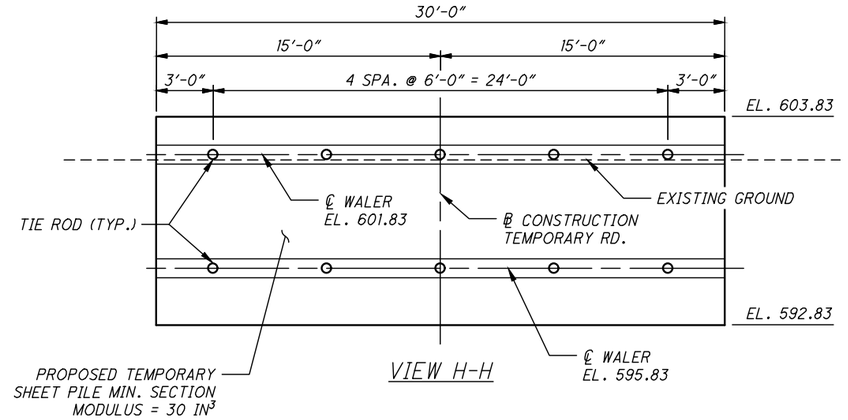

VIEW H-H

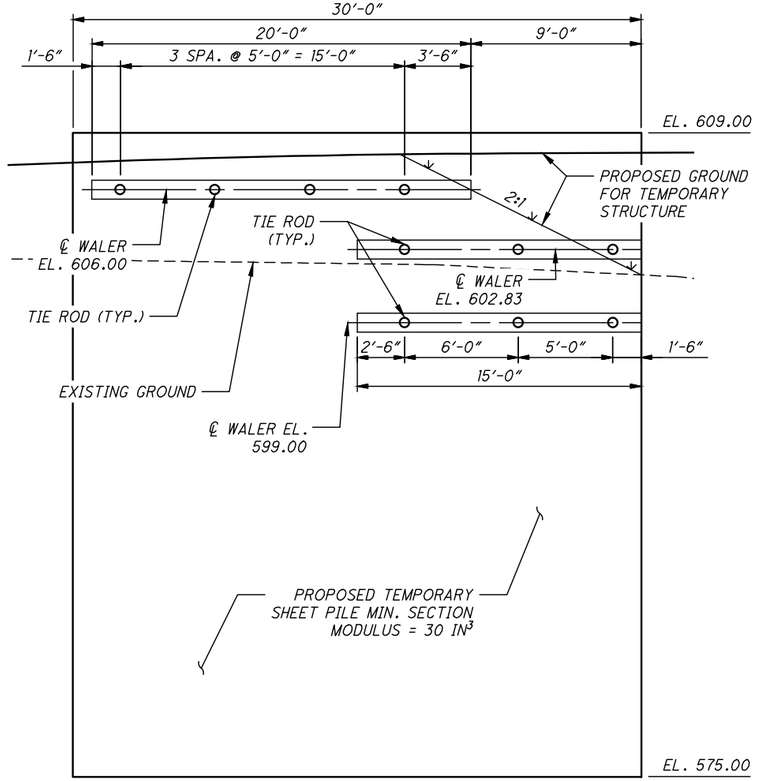

VIEW F-F

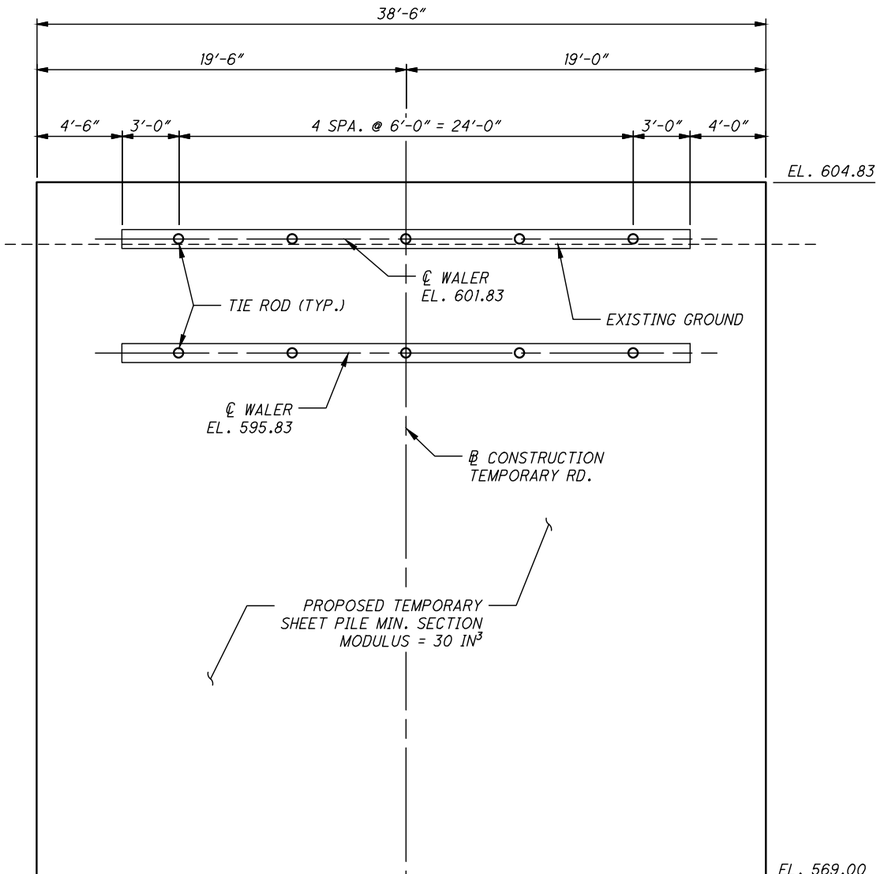

VIEW G-G

NOTES

1. SEE SHEET 7/18 FOR VIEW E-E, F-F, G-G, AND H-H LOCATIONS.
2. SEE SHEET 10/18 FOR WALER AND TIE ROD DETAILS.

P:\PR57030\Cadd\Sheets\ORR_91653_TEMP_SH003.dwg 13-Sep-21 11:14 AM

DESIGN AGENCY
BURGESS & NIPLE
100 WEST ERIE STREET
PAINESVILLE, OHIO 44077

DESIGNED	DRAWN	REVIEWED	DATE
KMA	KMA	DWL	09/2021
CHECKED	REVISED	STRUCTURE FILE NUMBER	
JAA			

FORWARD ABUTMENT TEMPORARY SHORING DETAILS

TEMPORARY BRIDGE 00.42 T
OVER CUYAHOGA RIVER

CUY - OLD ROCKSIDE ROAD

9 / 18

89
157

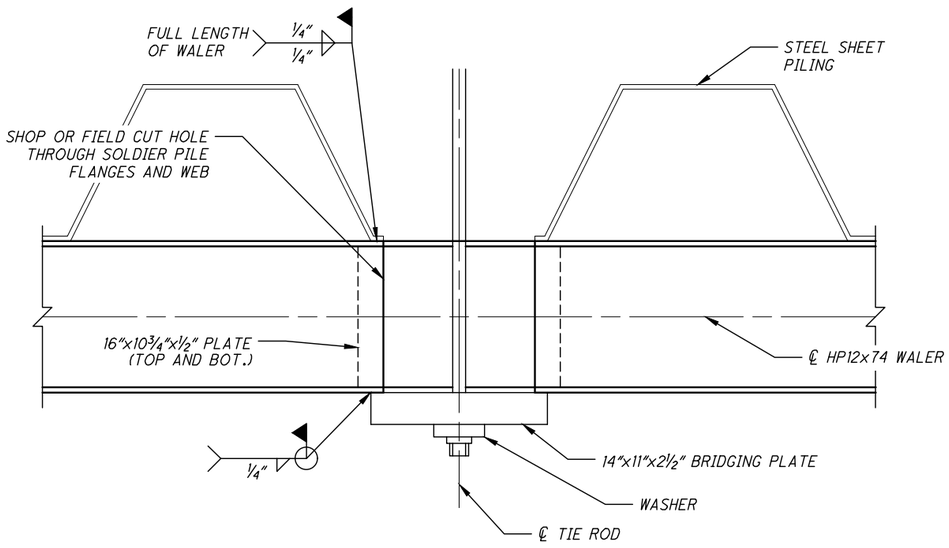

TIE ROD ATTACHMENT DETAIL

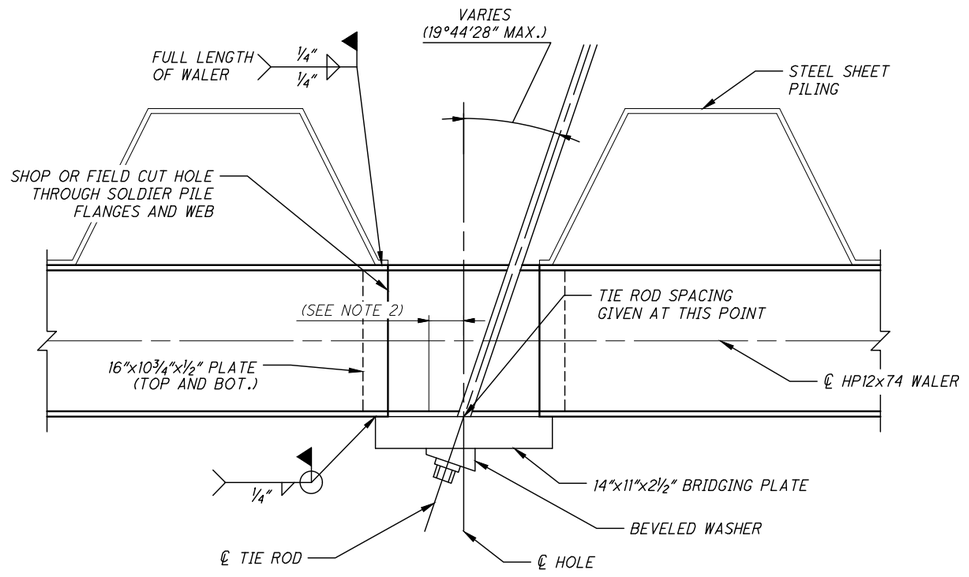

ANGLED TIE ROD ATTACHMENT DETAIL

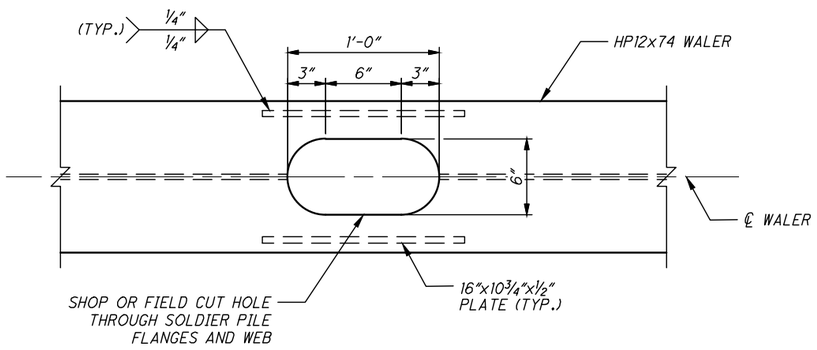

WALER ELEVATION

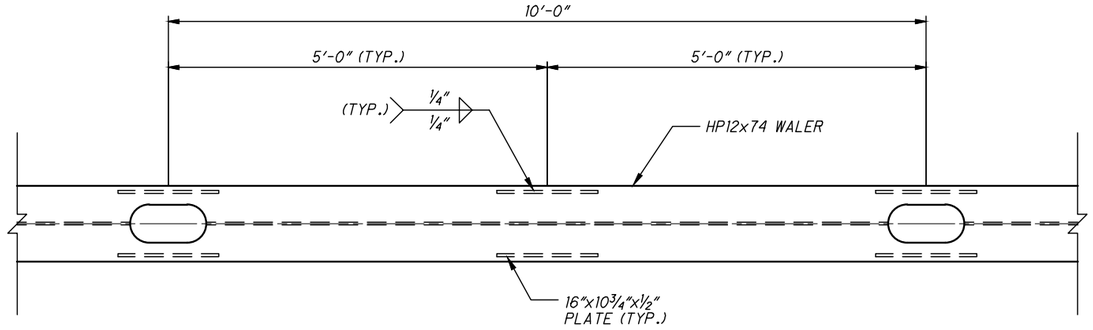

ADDITIONAL BRACE DETAIL
(SOUTHERN WALERS ONLY)

NOTES

1. THE SHOP/FIELD CUT HOLES SHOWN FOR THE TIE RODS ARE MAXIMUMS AND MAY BE MADE SMALLER.
2. THE CONTRACTOR MAY SHIFT THE ℄ TIE ROD A MAXIMUM OF 3" AT ANGLED TIE ROD LOCATIONS FOR EASE OF INSTALLATION. THE ℄ HOLE SPACING SHALL BE UNAFFECTED BY THIS SHIFT.
3. WALERS MAY BE SPLICED SEGMENTS MADE CONTINUOUS WITH FULL PENETRATION FIELD WELDS. WALERS SHALL BE CONTINUOUS FOR THE FINAL CONSTRUCTION CONDITION.

DESIGN AGENCY
BURGESS & NIPLE
100 WEST ERIE STREET
PAINESVILLE, OHIO 44077

DESIGNED	DRAWN	REVIEWED	DATE
KMA	KMA	DWL	09/2021
CHECKED	REVISED	STRUCTURE FILE NUMBER	
JAA			

TYPICAL SHORING DETAILS
TEMPORARY BRIDGE 00.42 T
OVER CUYAHOGA RIVER

CUY - OLD
ROCKSIDE ROAD

P:\PR57030\Cadd\Sheets\ORR_91563_TEMP_SH004.dwg 13-Sep-21 11:14 AM

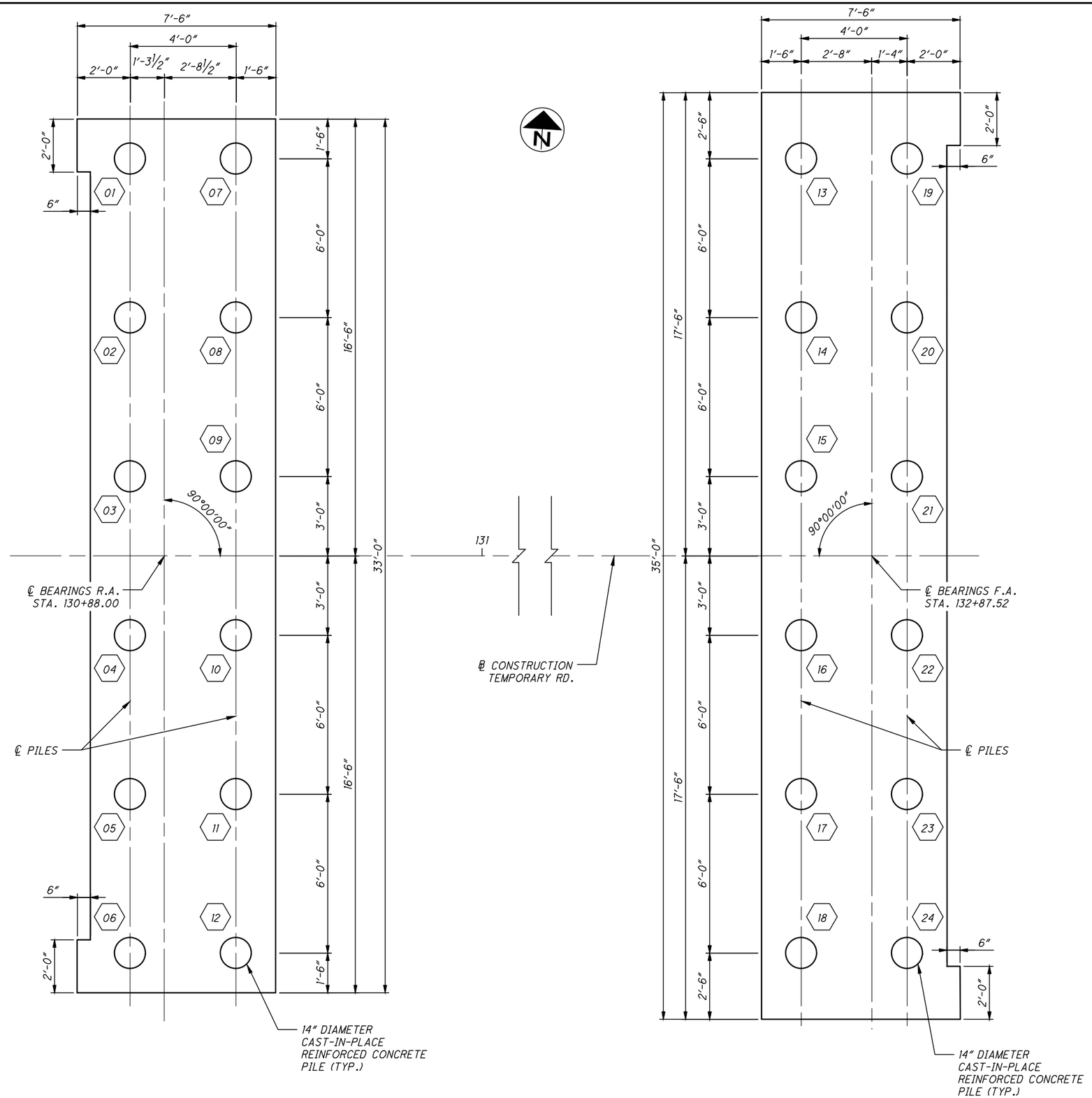

NOTES

1. ABUTMENT DIMENSIONS AND DETAILS ARE SHOWN PER THE DETAILS OF ITEM 502. IT IS THE RESPONSIBILITY OF THE CONTRACTOR TO VERIFY DETAILS AND DIMENSIONS SHOULD A DIFFERENT SUPERSTRUCTURE TYPE BE CHOSEN.

LEGEND

XX = PILE NUMBER

P:\PR57030\Cadd\Sheets\ORR_91563_TEMP_S0001.dwg 13-Sep-21 11:14 AM

DESIGN AGENCY
BURGESS & NIPLE
100 WEST ERIE STREET
PAINESVILLE, OHIO 44077

DESIGNED	DRAWN	REVIEWED	DATE
KMA	KMA	DWL	09/2021
CHECKED	REVISED	STRUCTURE FILE NUMBER	
JAA			

FOUNDATION PLAN
TEMPORARY BRIDGE 00.42 T
OVER CUYAHOGA RIVER

CUY - OLD
ROCKSIDE ROAD

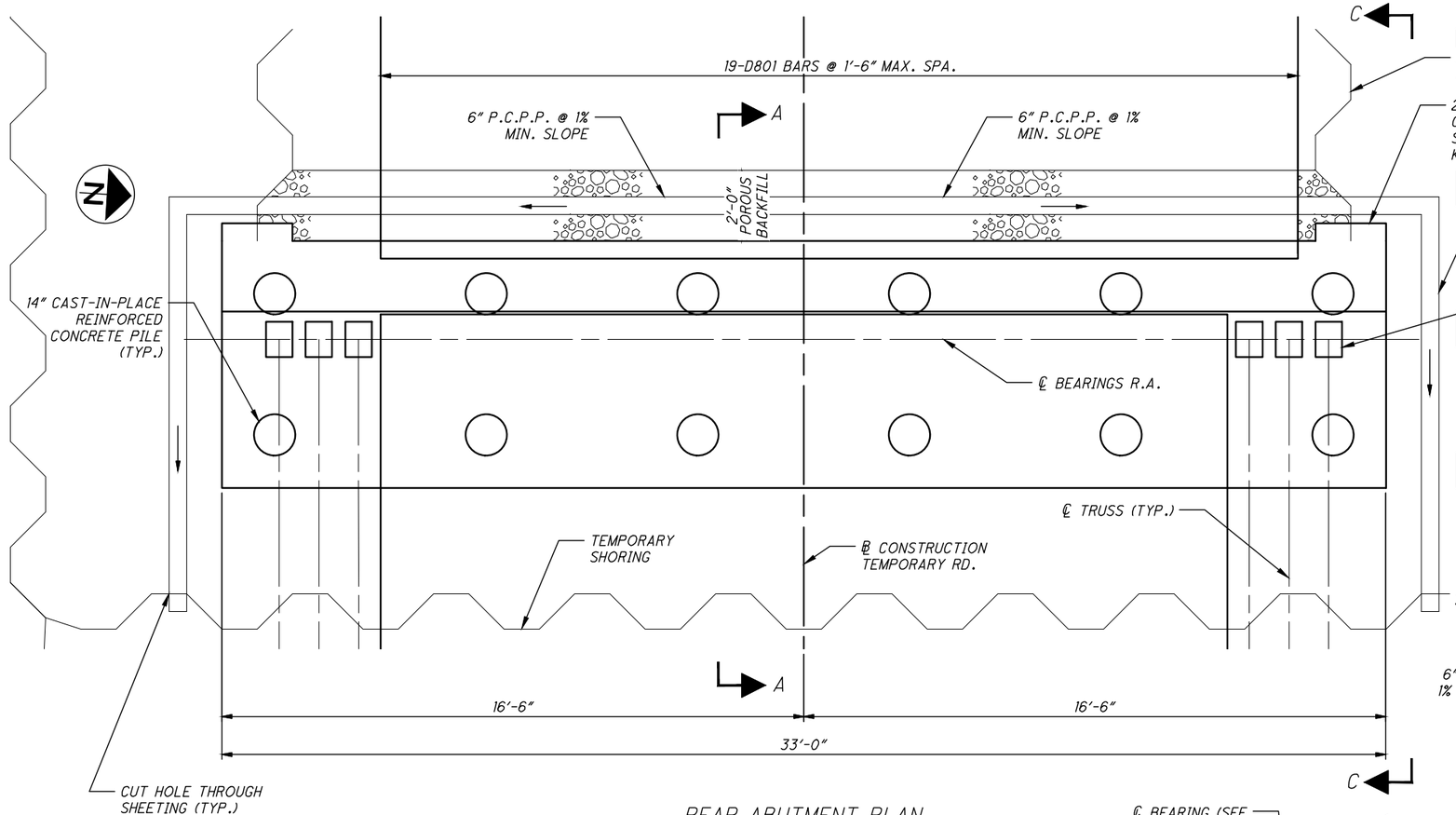

REAR ABUTMENT PLAN

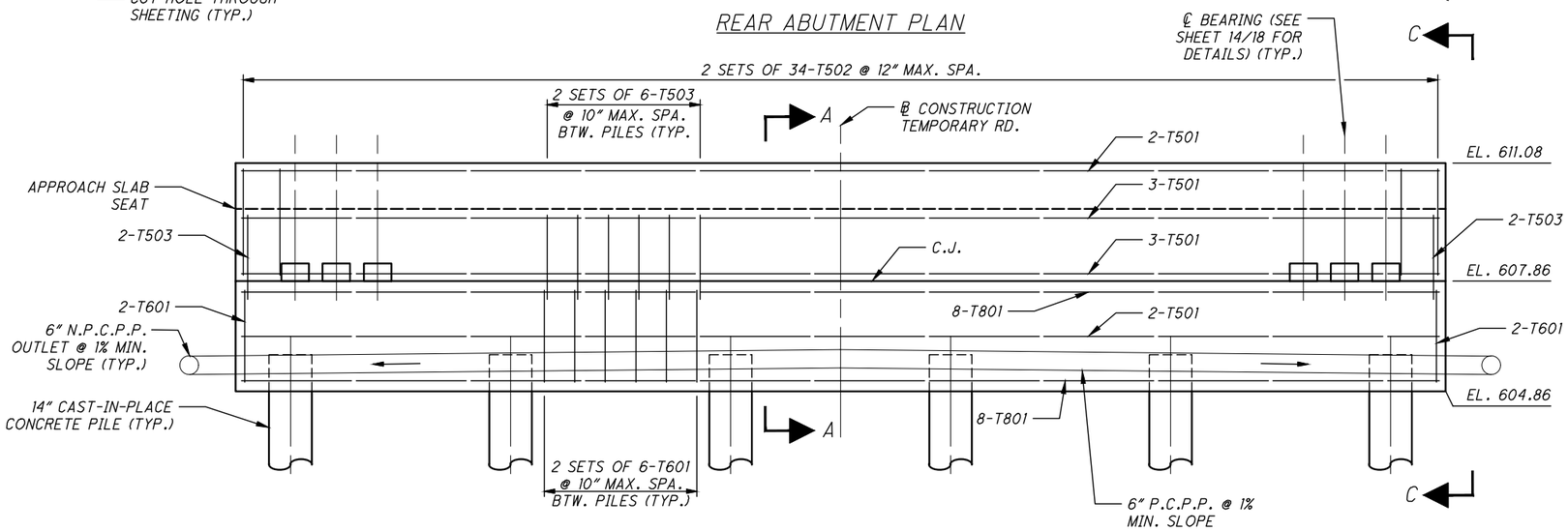

REAR ABUTMENT ELEVATION

NOTES

1. ABUTMENT BACKWALL SHALL BE INSTALLED AFTER SUPERSTRUCTURE IS IN PLACE. CONTRACTOR SHALL PROVIDE 1" GAP FROM END OF SUPERSTRUCTURE TO FACE OF BACKWALL, SO BACKWALL THICKNESS MAY VARY FROM THAT SHOWN. CONTRACTOR TO MAINTAIN CLEAR DISTANCES SHOWN.
2. ABUTMENT DIMENSIONS AND DETAILS ARE SHOWN PER THE DETAILS OF ITEM 502. IT IS THE RESPONSIBILITY OF THE CONTRACTOR TO VERIFY DETAILS AND DIMENSIONS SHOULD A DIFFERENT SUPERSTRUCTURE BE CHOSEN.
3. CONTRACTOR SHALL TAKE CARE IN THE LAYING OF REBAR AND SHALL PLACE THE BARS TO MEET THE REQUIRED MAXIMUM SPACING AS REQUIRED ON THE DETAILS, BUT SHALL ALSO BE PLACED TO AVOID CONFLICTS WITH BEARING ANCHORS. SEE SHEET 14/18 FOR BEARING DETAILS.
4. SEE SHEET 13/18 FOR SECTION C-C.

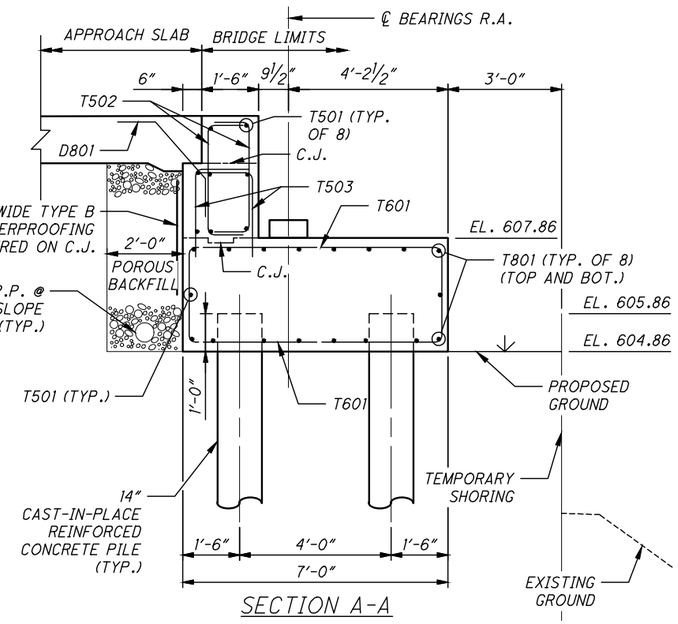

SECTION A-A

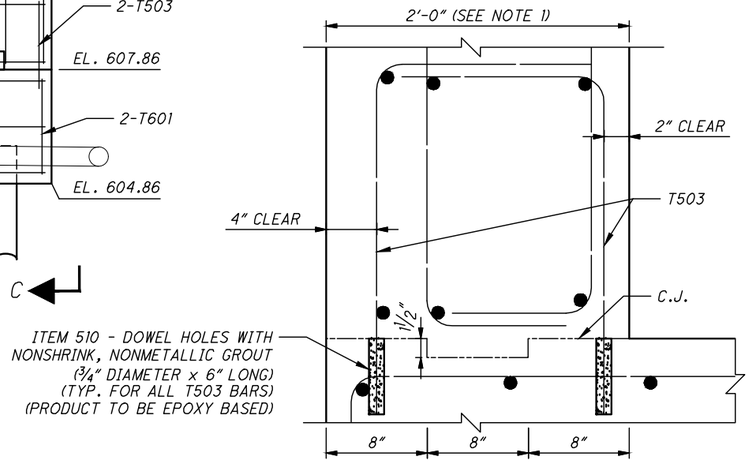

BACKWALL CONSTRUCTION JOINT DETAIL

DESIGN AGENCY
BURGESS & NIPLE
100 WEST ERIE STREET
PAINESVILLE, OHIO 44077

DESIGNED	DRAWN	REVIEWED	DATE
KMA	KMA	DWL	09/2021
CHECKED	REVISED	STRUCTURE FILE NUMBER	
JAA			

REAR ABUTMENT DETAILS
TEMPORARY BRIDGE 00.42 T
OVER CUYAHOGA RIVER

CUY - OLD ROCKSIDE ROAD

12 / 18

92 / 157

P:\PR57030\Cadd\Sheets\ORR_91563_TEMP_SR001.dwg 13-Sep-21 11:15 AM

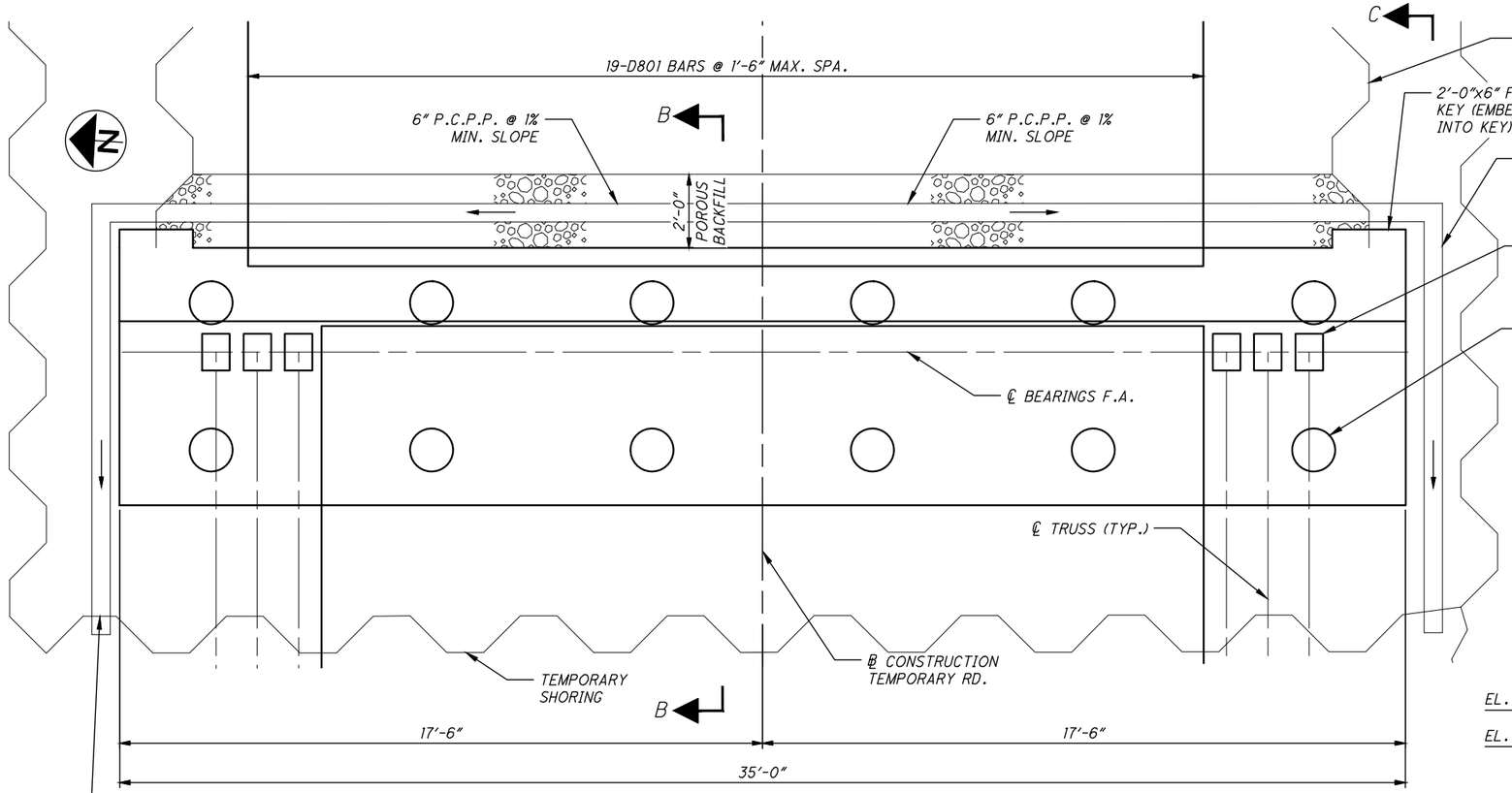

FORWARD ABUTMENT PLAN

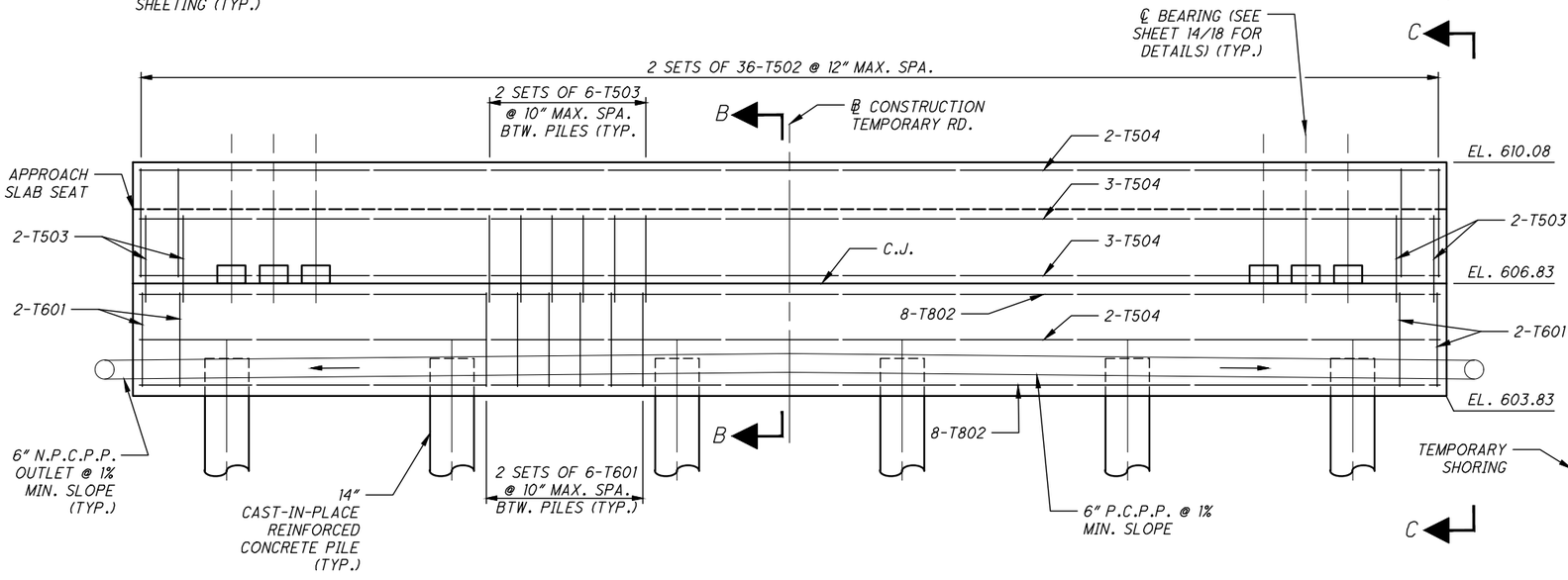

FORWARD ABUTMENT ELEVATION

NOTES

1. ABUTMENT BACKWALL SHALL BE INSTALLED AFTER SUPERSTRUCTURE IS IN PLACE. SEE DETAIL ON SHEET 12/18. CONTRACTOR SHALL PROVIDE 1½" GAP FROM END OF SUPERSTRUCTURE TO FACE OF BACKWALL, SO BACKWALL THICKNESS MAY VARY FROM THAT SHOWN. CONTRACTOR TO MAINTAIN CLEAR DISTANCES SHOWN.
2. ABUTMENT DIMENSIONS AND DETAILS ARE SHOWN PER THE DETAILS OF ITEM 502. IT IS THE RESPONSIBILITY OF THE CONTRACTOR TO VERIFY DETAILS AND DIMENSIONS SHOULD A DIFFERENT SUPERSTRUCTURE BE CHOSEN.
3. CONTRACTOR SHALL TAKE CARE IN THE LAYING OF REBAR AND SHALL PLACE THE BARS TO MEET THE REQUIRED MAXIMUM SPACING AS REQUIRED ON THE DETAILS, BUT SHALL ALSO BE PLACED TO AVOID CONFLICTS WITH BEARING ANCHORS. SEE SHEET 14/18 FOR BEARING DETAILS.

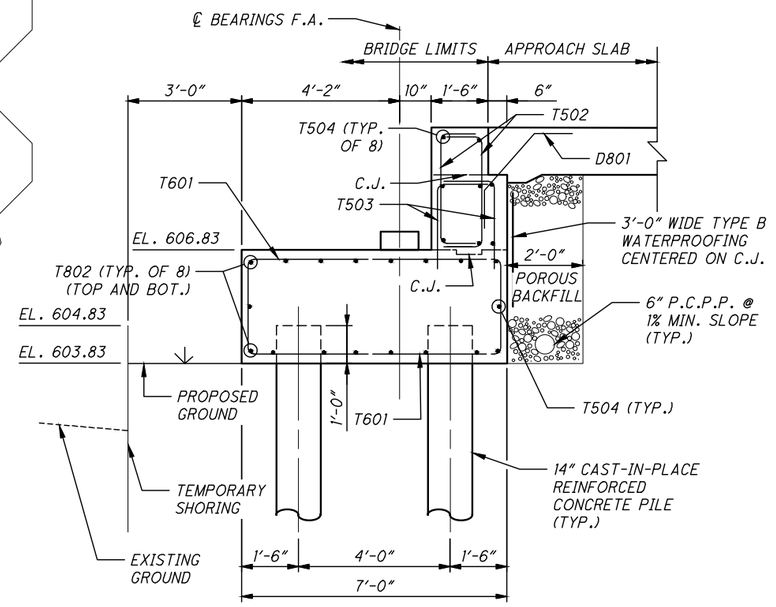

SECTION B-B

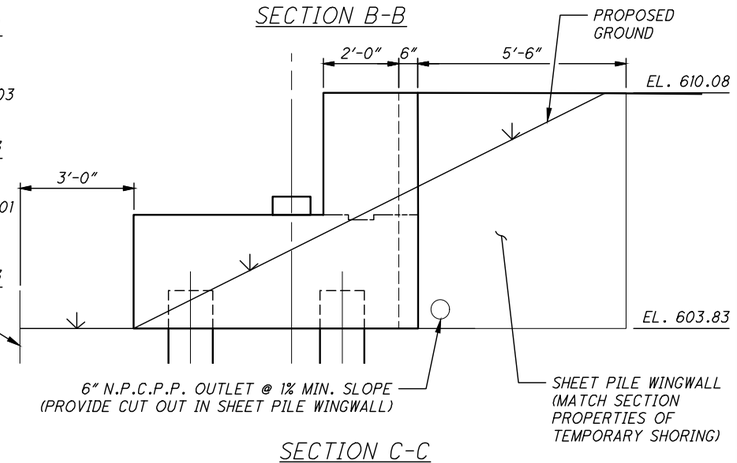

SECTION C-C
(FORWARD ABUTMENT SHOWN, REAR ABUTMENT SIMILAR)

DESIGN AGENCY
BURGESS & NIPLE
100 WEST ERIE STREET
PAINESVILLE, OHIO 44077

DESIGNED	DRAWN	REVIEWED	DATE
KMA	KMA	DWL	09/2021
CHECKED	REVISED	STRUCTURE FILE NUMBER	
JAA			

FORWARD ABUTMENT DETAILS
TEMPORARY BRIDGE 00.42 T
OVER CUYAHOGA RIVER

CUY - OLD ROCKSIDE ROAD

13 / 18

93
157

P:\PR57030\Cadd\Sheets\ORR_91563_TEMP_SF001.dwg 13-Sep-21 11:16 AM

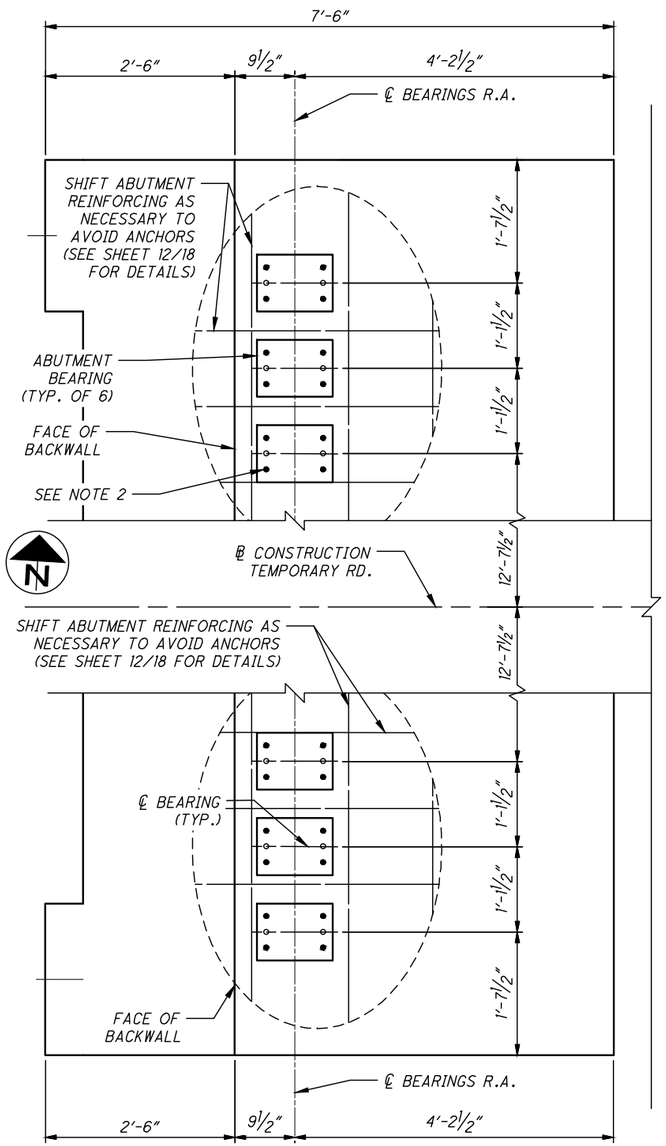

REAR ABUTMENT BEARING PLAN
(FIXED BEARINGS)

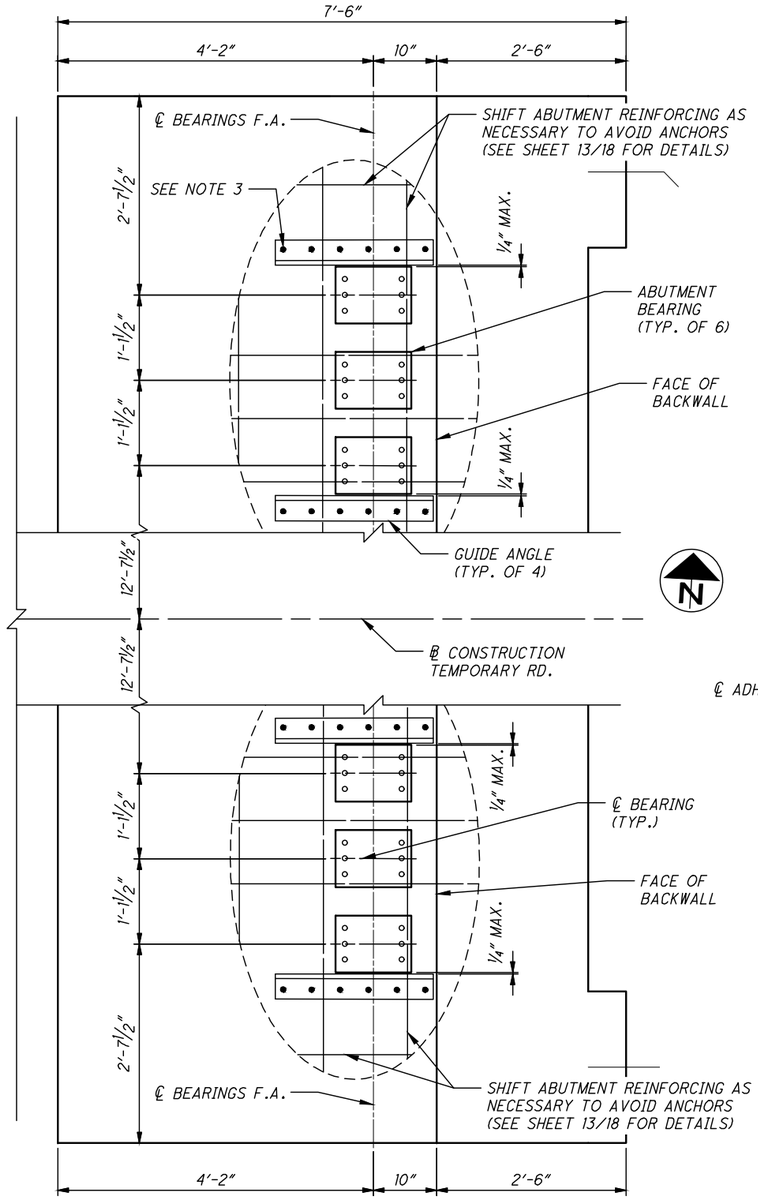

FORWARD ABUTMENT BEARING PLAN
(EXPANSION BEARINGS)

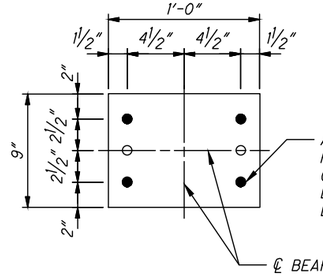

TYPICAL BEARING BASE PLATE

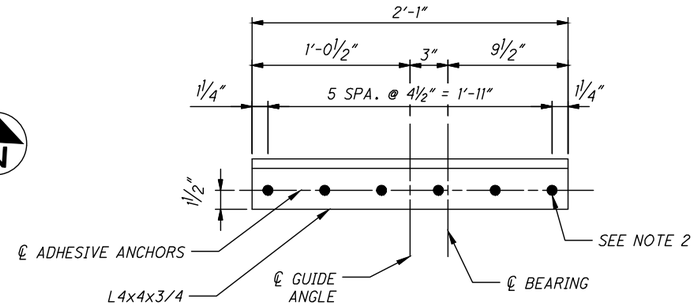

TYPICAL GUIDE ANGLE DETAIL

NOTES

1. ABUTMENT DIMENSIONS AND DETAILS ARE SHOWN PER THE DETAILS OF ITEM 502. IT IS THE RESPONSIBILITY OF THE CONTRACTOR TO VERIFY DETAILS AND DIMENSIONS SHOULD A DIFFERENT SUPERSTRUCTURE TYPE BE CHOSEN.
2. BEARING BASE PLATES SHALL BE PREPARED WITH HOLES SIZED FOR ¾" DIAMETER EPOXY ADHESIVE ANCHOR. FILLED HOLES ON THE DETAILS INDICATE LOCATIONS WHERE ADHESIVE ANCHORS SHALL BE INSTALLED. ADHESIVE ANCHOR BOLTS SHALL BE GALVANIZED STEEL AND SHALL BE EMBEDDED 12" INTO THE CONCRETE.
3. GUIDE ANGLES SHALL BE PREPARED WITH HOLES SIZED FOR ¾" DIAMETER EPOXY ADHESIVE ANCHORS. FILED HOLES ON THE DETAILS INDICATE LOCATIONS WHERE ADHESIVE ANCHORS SHALL BE INSTALLED. ADHESIVE ANCHOR BOLTS SHALL BE GALVANIZED STEEL AND SHALL BE EMBEDDED 15" INTO THE CONCRETE.
4. BEARING PLATES SHALL BE PROVIDED BY SUPERSTRUCTURE MANUFACTURER. THE CONTRACTOR SHALL CONFIRM DIMENSIONS AND LOCATIONS OF BEARINGS SHOWN.
5. SUPERSTRUCTURE ERECTION AND BEARING INSTALLATION SEQUENCE SHALL BE AS PRESCRIBED BY SUPERSTRUCTURE MANUFACTURER AND SHALL BE PAID FOR UNDER ITEM 502.

P:\PR57030\Cadd\Sheets\ORR_91563_TEMP_SM001.dwg 13-Sep-21 11:17 AM

DESIGN AGENCY
BURGESS & NIPLE
100 WEST ERIE STREET
PAINESVILLE, OHIO 44077

DESIGNED	DRAWN	REVIEWED	DATE
KMA	KMA	DWL	09/2021
CHECKED	REVISED	STRUCTURE FILE NUMBER	
JAA			

BEARING DETAILS
TEMPORARY BRIDGE 00.42 T
OVER CUYAHOGA RIVER

CUY - OLD
ROCKSIDE ROAD

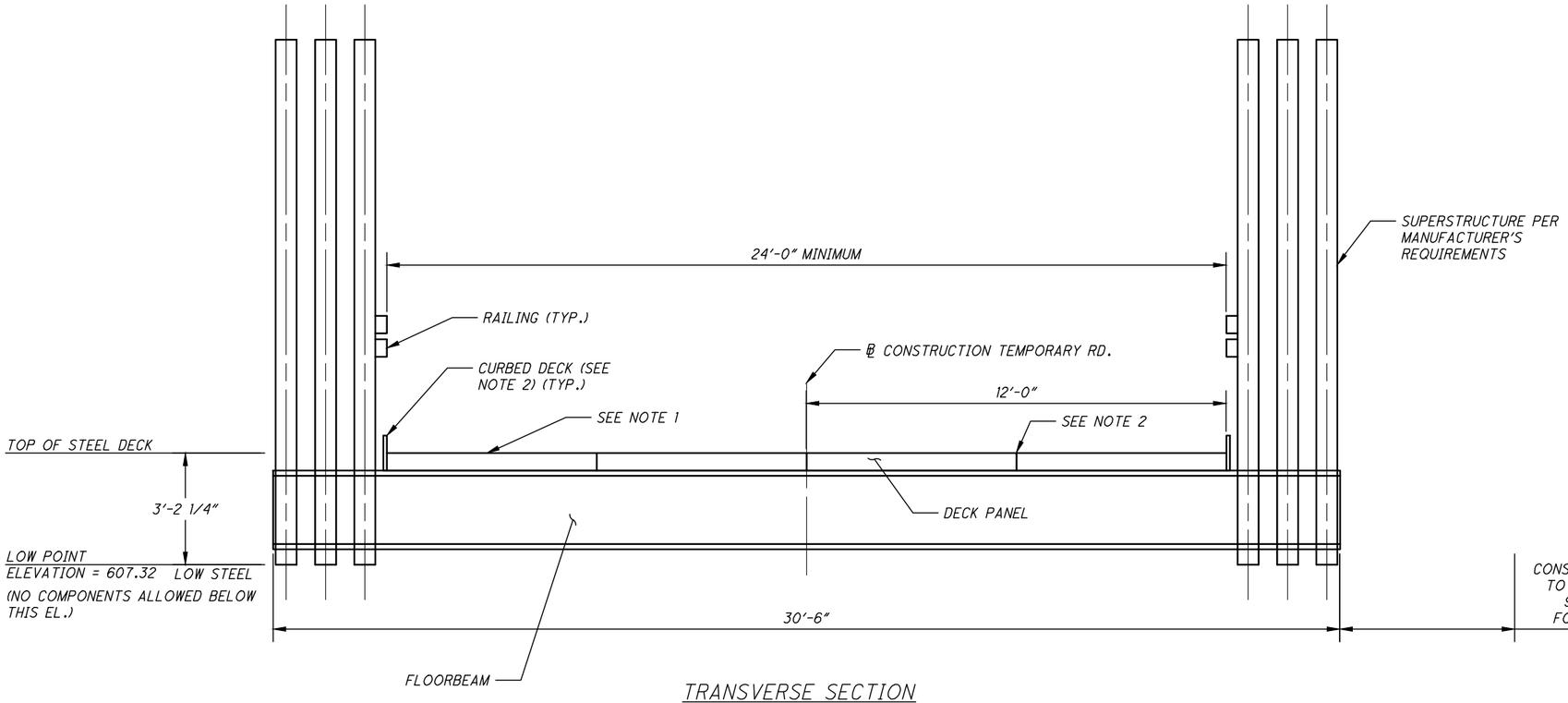

TRANSVERSE SECTION

NOTES

1. WEARING SURFACE SHALL BE ASPHALT OR NON-SKID EPOXY COATING APPROVED BY THE ENGINEER.
2. DRAINAGE RUNOFF SHALL BE ACCOMMODATED THROUGH JOINTS IN THE STEEL DECK PANEL, CURB JOINTS, AND THE PROFILE GRADE.
3. SEE ITEM 502 - STRUCTURE FOR MAINTAINING TRAFFIC, AS PER PLAN NOTE FOR FURTHER DETAILS.

DESIGN AGENCY
BURGESS & NIPLE
100 WEST ERIE STREET
PAINESVILLE, OHIO 44077

DESIGNED	DRAWN	REVIEWED	DATE
KMA	KMA	DWL	09/2021
CHECKED	REVISED	STRUCTURE FILE NUMBER	
JAA			

TRANSVERSE SECTION
TEMPORARY BRIDGE 00.42 T
OVER CUYAHOGA RIVER

CUY - OLD ROCKSIDE ROAD

15 / 18

95
157

P:\PR57030\Cadd\Sheets\ORR_91563_TEMP_ST002.dwg 13-Sep-21 11:17 AM

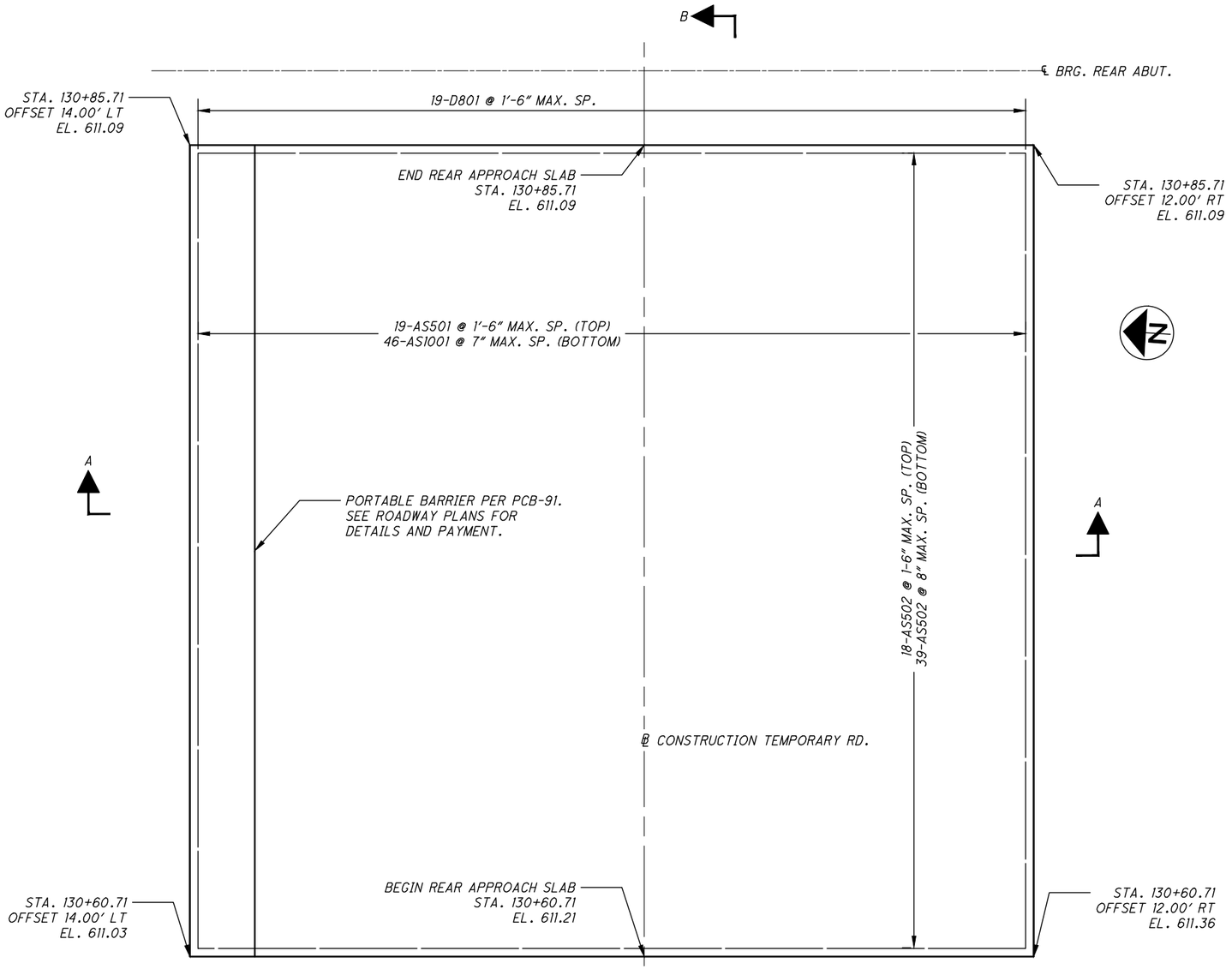

PLAN

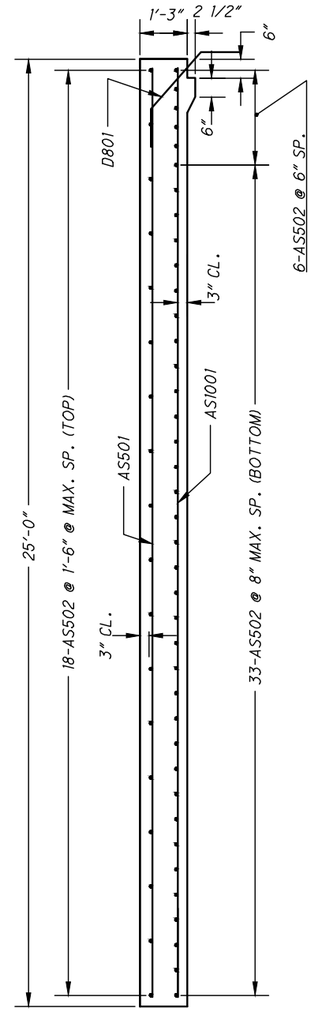

SECTION B-B

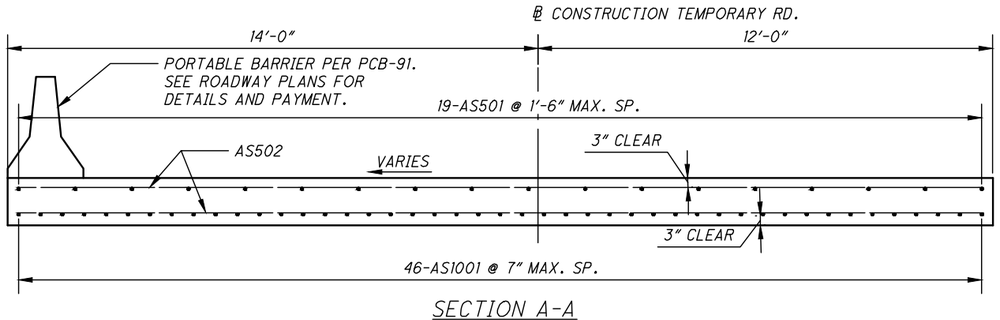

SECTION A-A

NOTES

1. SEE ODOT STANDARD BRIDGE DRAWING AS-1-15 FOR INFORMATION NOT SHOWN.
2. APPROACH SLAB ELEVATIONS SHOWN REPRESENT THE TOP OF THE SLAB.

DESIGN AGENCY
BURGESS & NIPLE
100 WEST ERIE STREET
PAINESVILLE, OHIO 44077

DESIGNED	DRAWN	REVIEWED	DATE
GJL	WTB	DWL	09/2021
CHECKED	REVISED	STRUCTURE FILE NUMBER	
JAA			

REAR APPROACH SLAB DETAILS
TEMPORARY BRIDGE 00.42 T
OVER CUYAHOGA RIVER

CUY - OLD ROCKSIDE ROAD

16 / 18

96
157

P:\PR57030\Cadd\Sheets\ORR_91563_TEMP_SR002.dwg 13-Sep-21 11:18 AM

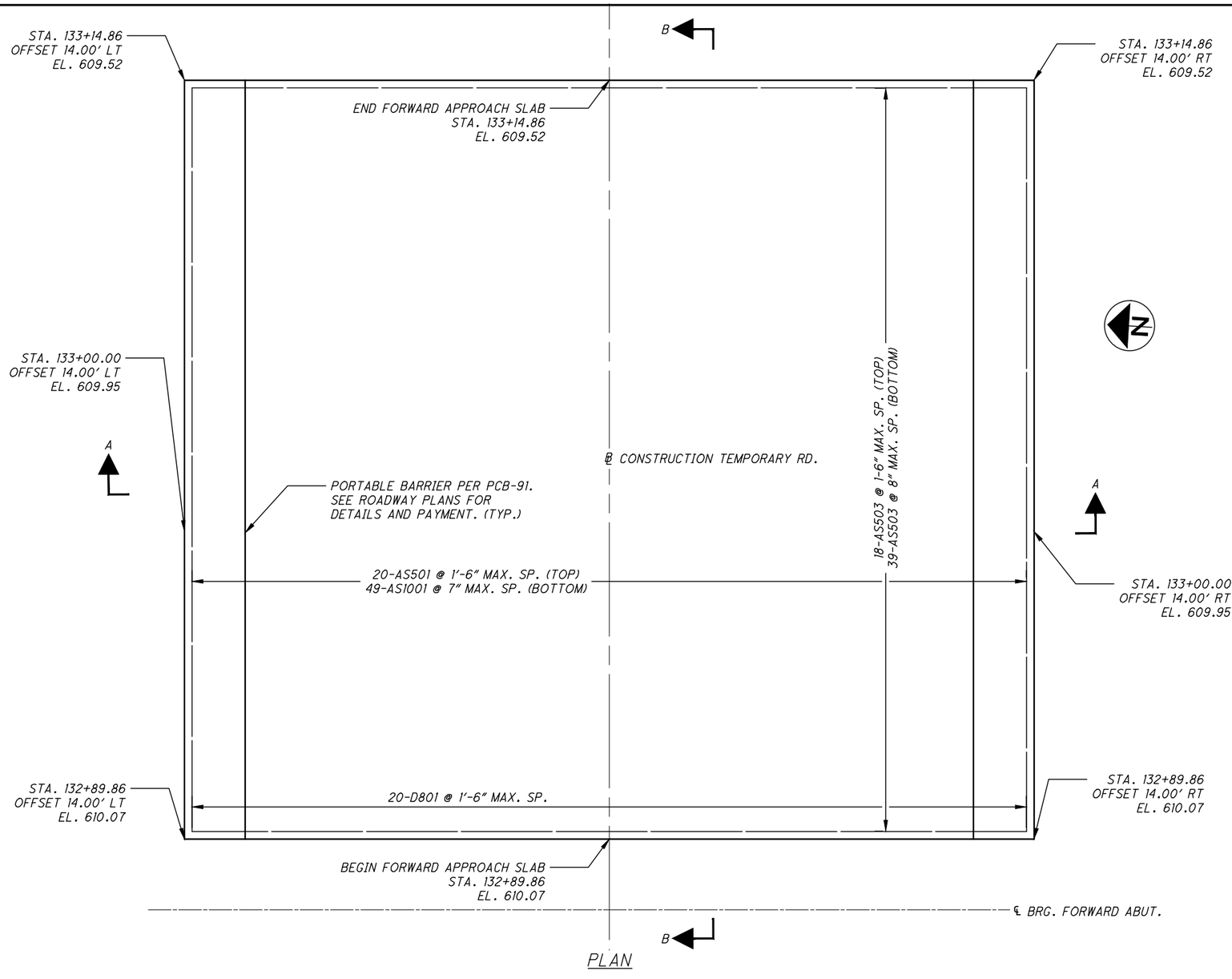

PLAN

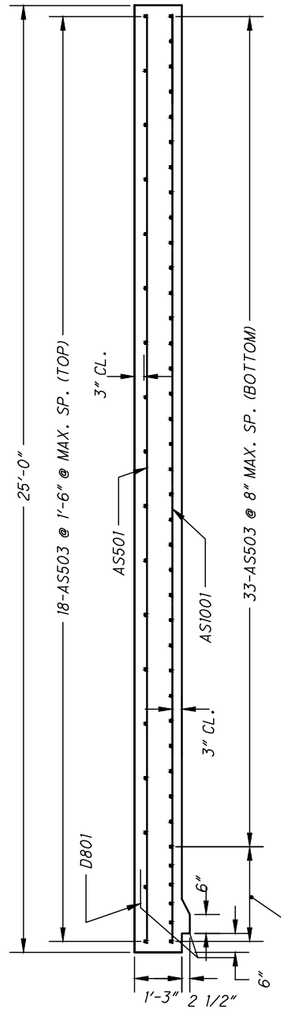

SECTION B-B

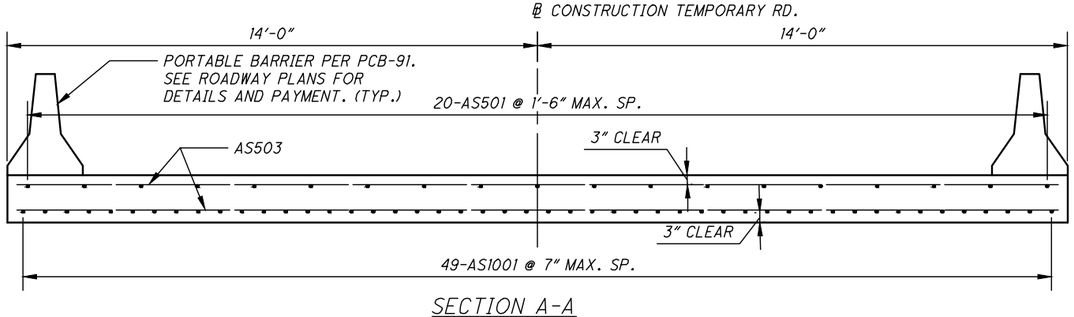

SECTION A-A

NOTES

1. SEE ODOT STANDARD BRIDGE DRAWING AS-1-15 FOR INFORMATION NOT SHOWN.
2. APPROACH SLAB ELEVATIONS SHOWN REPRESENT THE TOP OF THE SLAB.

DESIGN AGENCY
BURGESS & NIPLE
100 WEST ERIE STREET
PAINESVILLE, OHIO 44077

DESIGNED	DRAWN	REVIEWED	DATE
GJL	WTB	DWL	09/2021
CHECKED	REVISED	STRUCTURE FILE NUMBER	
JAA			

FORWARD APPROACH SLAB DETAILS
TEMPORARY BRIDGE 00.42 T
OVER CUYAHOGA RIVER

CUY - OLD ROCKSIDE ROAD

17 / 18

97
157

P:\PR57030\Cadd\Sheets\ORR_91563_TEMP_SR003.dwg 13-Sep-21 11:18 AM

APPROACH SLABS										
MARK	NO.	LENGTH	WEIGHT (LBS)	TYPE	DIMENSIONS					
					A	B	C	D	E	INC.
AS501	39	24'-7"	1000	STR						
AS502	57	25'-7"	1521	STR						
AS503	57	27'-7"	1640	STR						
AS1001	95	24'-7"	10049	STR						
D801	39	4'-9"	495	26	1'-0"	1'-0"	2'-0"	1'-0"	1'-0"	
	TOTAL	WEIGHT	*							

* ASXXX AND D801 MARKED BARS ARE INCLUDED IN ITEM 526 - REINFORCED CONCRETE APPROACH SLABS (T=15"), AS PER PLAN AND ARE NOT INCLUDED IN THE TOTAL FOR ITEM 509 - EPOXY COATED REINFORCING STEEL, AS PER PLAN.

ABUTMENTS										
MARK	NO.	LENGTH	WEIGHT (LBS)	TYPE	DIMENSIONS					
					A	B	C	D	E	INC.
T501	10	32'-7"	340	STR						
T502	140	4'-6"	657	18	2'-9"	1'-0"	1'-0"			
T503	132	3'-7"	493	1	1'-5"	2'-3"				
T504	10	34'-7"	361	STR						
T601	132	11'-3"	2230	18	6'-7"	2'-6"	2'-6"			
T801	16	32'-7"	1392	STR						
T802	16	34'-7"	1477	STR						
	TOTAL	WEIGHT	6950							

NOTES:

1. BAR SIZE: THE BAR SIZE IS INDICATED IN THE BAR MARK. THE MARK BEGINS WITH ONE OR TWO LETTERS THAT IDENTIFY THE BAR LOCATION. THE NEXT ONE OR TWO DIGITS IS THE BAR SIZE. THE FINAL TWO DIGITS ARE THE SEQUENCE NUMBERS.

   EXAMPLE: A501
   A = ABUTMENT
   5 = #5 BAR
   01 = SEQUENCE NUMBER

2. BAR DIMENSIONS SHOWN ARE OUT TO OUT UNLESS OTHERWISE INDICATED.
3. STR IN THE BAR TYPE COLUMN INDICATES A STRAIGHT BAR.
4. S.O. INDICATES A SERIES OF BARS.
5. INCR. INDICATES THE LENGTH OF INCREMENT FOR SERIES BARS.
6. RAD. INDICATES THE RADIUS OF A BAR.
7. ALL REINFORCING STEEL IS TO BE EPOXY COATED.

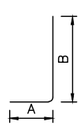

TYPE 1

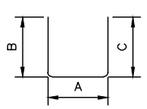

TYPE 18

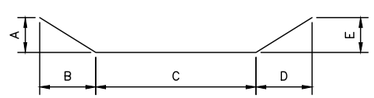

TYPE 26

DESIGN AGENCY
BURGESS & NIPLE
100 WEST ERIE STREET
PAINESVILLE, OHIO 44077

REVIEWED	DATE
DWL	09/2021
STRUCTURE FILE NUMBER	
DRAWN KMA	REVISED
DESIGNED KMA	CHECKED MAB

REINFORCING STEEL LIST
TEMPORARY BRIDGE 00.42 T
OVER CUYAHOGA RIVER

CUY - OLD ROCKSIDE ROAD

18 / 18

98
157

P:\PR57030\Cadd\Sheets\ORR_91653_TEMP_SL001.dwg 13-Sep-21 11:19 AM

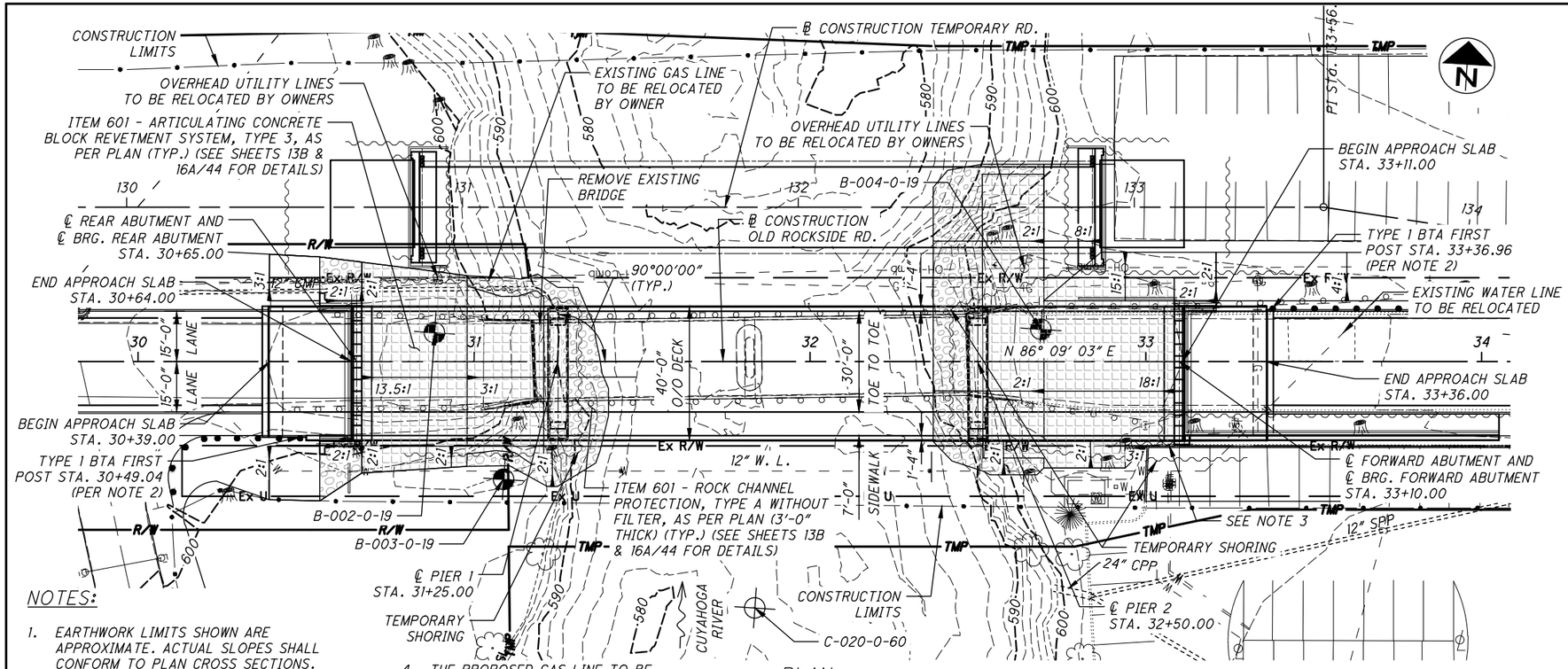

PLAN

NOTES:

1. EARTHWORK LIMITS SHOWN ARE APPROXIMATE. ACTUAL SLOPES SHALL CONFORM TO PLAN CROSS SECTIONS.
2. SEE ROADWAY PLANS FOR DETAILS AND PAYMENT.
3. ITEM 504 - SHEET PILING LEFT IN PLACE (MINIMUM SECTION MODULUS OF 30 CUBIC INCHES PER FOOT OF WALL) (MATCH TOP OF PROPOSED PARKING LOT CURB ELEVATIONS)
4. THE PROPOSED GAS LINE TO BE CONSTRUCTED BY DOMINION ENERGY AND ATTACHED TO THE BRIDGE IS PART OF A SEPARATE PROJECT AND IS NOT SHOWN BECAUSE THE FINAL LOCATION WAS NOT ESTABLISHED AT THE TIME OF PLAN SUBMISSION.

LEGEND:

= PROJECT SOIL BORING

= HISTORIC SOIL BORING

UNITED STATES ARMY CORP OF ENGINEERS (USACE) HYDRAULIC DATA AT OLD ROCKSIDE		
	100 YEAR	25 YEAR
USACE EXISTING CONDITION (WITH PROPOSED OLD ROCKSIDE)	606.17	604.45
USACE PROPOSED FUTURE FLOODWALL	606.05	604.44

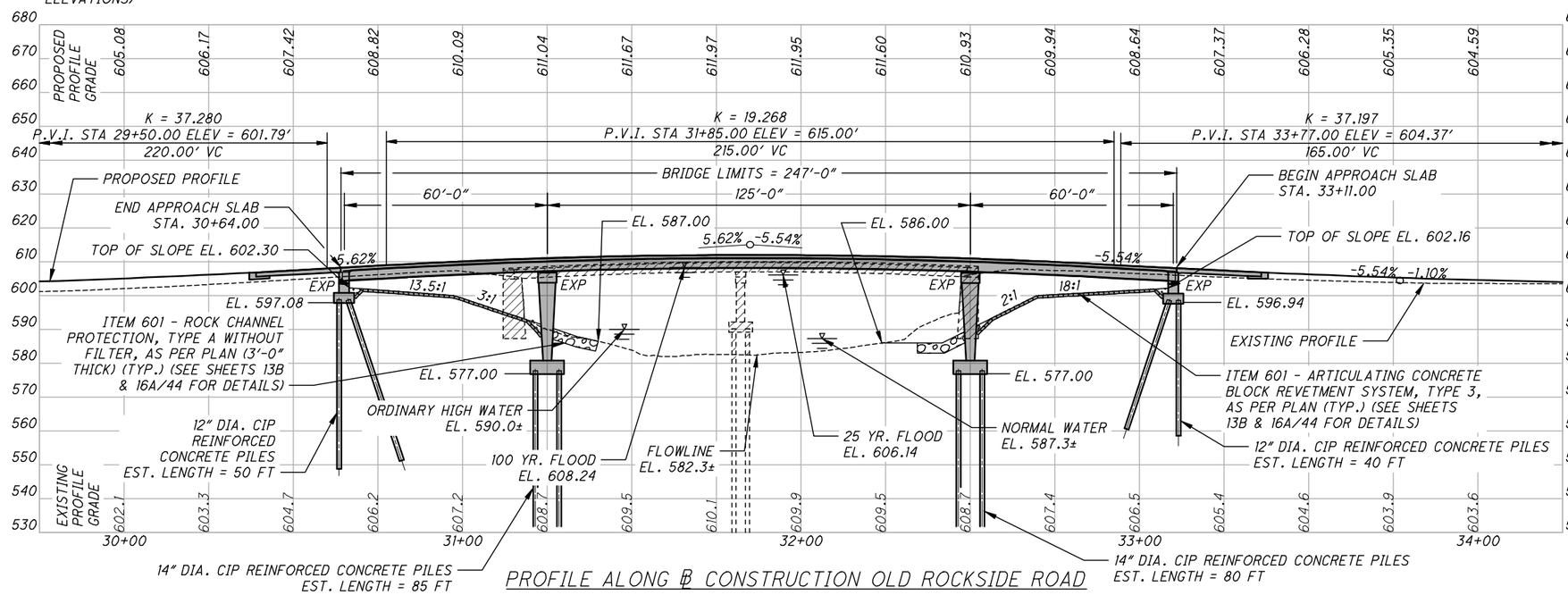

PROFILE ALONG ℄ CONSTRUCTION OLD ROCKSIDE ROAD

BENCHMARKS

BENCHMARK BM5	BENCHMARK BM6
DESCRIPTION: BENCHTIE IN TPP	DESCRIPTION: BENCHTIE IN
NORTHING: 630757.00	TLP 803301
EASTING: 2207232.93	NORTHING: 630804.44
STA. 29+34.76 (19.96' LT)	EASTING: 2207829.72
ELEVATION = 602.05	STA. 35+33.38 (27.23' LT)
	ELEVATION = 605.18

SOIL BORING INFORMATION

BORING NO.	B-002-0-19	B-003-0-19	B-004-0-19
STATION:	30+88.24	31+08.81	32+68.84
OFFSET:	8.64 LT	35.01 RT	9.60 LT
LATITUDE:	41.3946000	41.394500	41.394650
LONGITUDE:	-81.629600	-81.629500	-81.628950
ELEVATION:	606.97'	599.61'	607.71'

HYDRAULIC DATA

DRAINAGE AREA: 703 SQ. MI.

INTERVAL YEAR	Q CFS	V FPS	FREEBOARD
25	17,500	4.16	NONE
100	21,900	3.35	

TRAFFIC DATA

CURRENT ADT (2022): 1,800
DESIGN YEAR ADT (2042): 1,800
DESIGN YEAR ADTT (2042): 468

EXISTING STRUCTURE

TYPE: PRECAST, PRESTRESSED, CONCRETE BOX BEAMS WITH REINFORCED CONCRETE HAMMERHEAD PIER AND STONE ABUTMENTS.

SKEW: NONE

SPAN: 65'-9"±, 65'-9"± C/C BEARINGS

ROADWAY: 22'-3½"± F/F CURB

LOADING: SPECIAL (ADEQUATE FOR H20-S16-44)

WEARING SURFACE: ASPHALTIC CONCRETE - VARIABLE THICKNESS, 2½" MIN., 6" MAX.

APPROACH SLABS: NONE

ALIGNMENT: TANGENT

CROWN: NONE

DATE BUILT: 1960

SFN: 1876082

PROPOSED STRUCTURE

TYPE: CONTINUOUS STEEL BEAMS WITH COMPOSITE REINFORCED CONCRETE DECK AND SUBSTRUCTURES WITH SEMI-INTEGRAL ABUTMENTS.

SKEW: NONE

SPANS: 60'-0", 125'-0", 60'-0" C/C BEARINGS

ROADWAY: 30'-0" TOE OF BARRIER TO TOE OF CURB WITH 7'-0" SIDEWALK ON SOUTH SIDE

LOADING: HL-93 WITH 60 PSF FUTURE WEARING SURFACE

WEARING SURFACE: 1 1/4" MONOLITHIC CONCRETE

APPROACH SLABS: 25' LONG (AS-1-15 MODIFIED) AND AS-2-15 TYPE C INSTALLATION

ALIGNMENT: TANGENT

CROWN: 0.0156

LATITUDE: 41° 23' 40.62" N

LONGITUDE: 81° 37' 45.43" W

DECK AREA: 9880 FT²

BURGESS & NIPLE
100 WEST ERIE STREET
PAINESVILLE, OHIO 44077

DESIGNED GJL | DRAWN JMS | REVIEWED DWL | DATE 09/2021
CHECKED JAA | REVISED | STRUCTURE FILE NUMBER 1876083

CUYAHOGA COUNTY
STA. 30+64.00
STA. 33+11.00

SITE PLAN
BRIDGE 00.42
OVER CUYAHOGA RIVER

CUY - OLD ROCKSIDE ROAD

P:\PR57030\Cadd\Sheets\ORR_91563_0042_SP001.dwg 13-Sep-21 11:24 AM

REFER TO THE FOLLOWING ODOT STANDARD BRIDGE DRAWINGS:

AS-1-15 REVISED 07-17-15
AS-2-15 REVISED 1-18-19
BR-2-15 DATED 07-17-15
GSD-1-19 DATED 01-15-21
SICD-1-96 REVISED 07-18-14
SICD-2-14 DATED 01-15-21

AND TO THE FOLLOWING ODOT SUPPLEMENTAL SPECIFICATIONS:

800 DATED 07-16-21

AND TO THE FOLLOWING CUYAHOGA COUNTY DEPARTMENT OF PUBLIC WORKS STANDARD BRIDGE DRAWINGS:

AS-1C REVISED 07-14-16
BR-2-15C REVISED 12-07-16
CP-1C REVISED 07-14-16
PRF-1C REVISED 07-14-16

DESIGN SPECIFICATIONS:

THIS STRUCTURE CONFORMS TO THE 8TH EDITION OF THE "LRFD BRIDGE DESIGN SPECIFICATIONS" ADOPTED BY THE AMERICAN ASSOCIATION OF STATE HIGHWAY AND TRANSPORTATION OFFICIALS, 2017, THE ODOT BRIDGE DESIGN MANUAL, 2020, AND THE CURRENT CUYAHOGA COUNTY DEPARTMENT OF PUBLIC WORKS' SUPPLEMENT THERETO.

OPERATIONAL IMPORTANCE:

A LOAD MODIFIER OF 1.0 HAS BEEN ASSUMED FOR THE DESIGN OF THIS STRUCTURE IN ACCORDANCE WITH THE AASHTO LRFD BRIDGE DESIGN SPECIFICATIONS, ARTICLE 1.3.5 AND THE ODOT BRIDGE DESIGN MANUAL, 2020.

DESIGN LOADING:

HL-93 (STRENGTH I)
FUTURE WEARING SURFACE (FWS) OF 0.060 KSF
PEDESTRIAN LOADING OF 0.075 KSF
ALL CRANE LOADINGS: (STRENGTH II)

ALL CRANE - 250T 6250L-8 164000

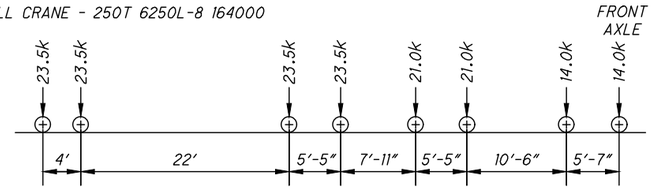

ALL CRANE - 300T LTM 1250-6.1

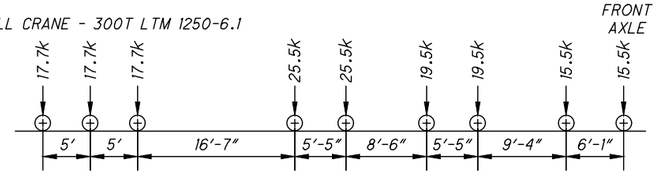

ALL CRANE - GRT 9165 WITH TIRES AND BOOM

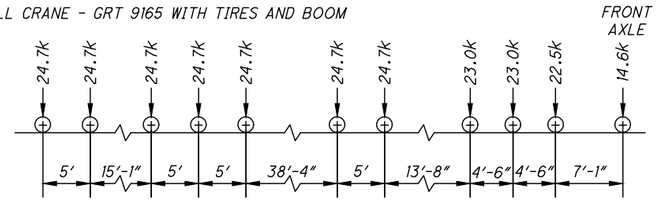

ALL CRANE - LTM1450-8.1 CRANE WITH BOOM

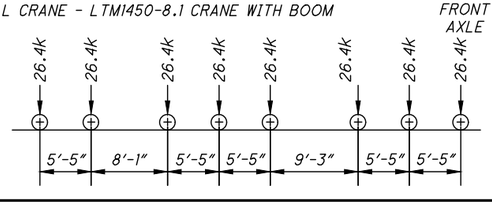

DESIGN DATA:

CLASS QC2 CONCRETE - COMPRESSIVE STRENGTH 4.5 KSI (SUPERSTRUCTURE)
CLASS QC1 CONCRETE - COMPRESSIVE STRENGTH 4.0 KSI (SUBSTRUCTURE)
REINFORCING STEEL - MINIMUM YIELD STRENGTH 60 KSI
STRUCTURAL STEEL - ASTM A709 GRADE 50W - YIELD STRENGTH 50 KSI
STRUCTURAL STEEL - ASTM A572 OR A709, GRADE 50 GALVANIZED (CURB PLATE)
STRUCTURAL STEEL - ASTM A252, GRADE 2 - YIELD STRENGTH 35 KSI (12" DIAMETER CAST-IN-PLACE REINFORCED CONCRETE PILES)
STRUCTURAL STEEL - ASTM A252, GRADE 3 - YIELD STRENGTH 45 KSI (14" DIAMETER CAST-IN-PLACE REINFORCED CONCRETE PILES)

SPECIFICATIONS AND STANDARD CONSTRUCTION DRAWINGS:

THE STATE OF OHIO DEPARTMENT OF TRANSPORTATION, CONSTRUCTION AND MATERIALS SPECIFICATIONS, DATED JANUARY 1, 2020, AND THE NOTED STANDARD CONSTRUCTION DRAWINGS SHALL GOVERN THIS IMPROVEMENT. WHEREVER THE WORD "STATE" OCCURS, IT IS TO MEAN CUYAHOGA COUNTY. WHEREVER THE WORD "DEPARTMENT" OCCURS, IT IS TO MEAN THE BOARD OF COUNTY COMMISSIONERS OF CUYAHOGA COUNTY, OHIO, AND WHEREVER THE WORD "DIRECTOR" OCCURS, IT IS TO MEAN COUNTY ENGINEER, AND/OR THEIR DESIGNATED REPRESENTATIVE, LIMITED TO THE PARTICULAR DUTIES ENTRUSTED TO THEM. WHEREVER THE WORD "ENGINEER" OCCURS, IT REFERS TO THE PROJECT ENGINEER.

DECK PROTECTION METHOD:

EPOXY COATED REINFORCING STEEL
3" CONCRETE COVER

MONOLITHIC WEARING SURFACE:

MONOLITHIC WEARING SURFACE IS ASSUMED, FOR DESIGN PURPOSES, TO BE 1 ¼" THICK.

MAINTENANCE OF TRAFFIC:

SEE ROADWAY PLAN SHEETS 14-36/157 FOR MAINTENANCE OF TRAFFIC REQUIREMENTS.

EXISTING STRUCTURE VERIFICATION:

DETAILS AND DIMENSIONS SHOWN ON THESE PLANS PERTAINING TO THE EXISTING STRUCTURE HAVE BEEN OBTAINED FROM PLANS OF THE EXISTING STRUCTURE AND/OR FIELD MEASUREMENTS. THEY ARE INDICATIVE OF THE EXISTING STRUCTURE AND PROPOSED WORK, BUT THEY SHALL BE CONSIDERED TENTATIVE AND APPROXIMATE. THE CONTRACTOR IS REFERRED TO SECTIONS 102.05 AND 105.02 OF THE CUYAHOGA COUNTY ENGINEER'S SPECIFICATION BOOKLET.

CONTRACT BID PRICES SHALL BE BASED UPON THE RECOGNITION OF THE UNCERTAINTIES DESCRIBED ABOVE AND UPON THE CONTRACTOR'S PREBID EXAMINATION OF THE EXISTING STRUCTURE. ALL PROJECT WORK, HOWEVER, SHALL BE BASED UPON ACTUAL DETAILS AND DIMENSIONS THAT HAVE BEEN VERIFIED BY THE CONTRACTOR IN THE FIELD.

PLANS OF THE EXISTING STRUCTURE ARE ON FILE AT THE CUYAHOGA COUNTY DEPARTMENT OF PUBLIC WORKS, 2079 EAST 9TH STREET, 5TH FLOOR, CLEVELAND, OHIO, 44115, AND ALSO ARE PROVIDED ELECTRONICALLY WITH THE BID PACKAGE DOCUMENTS. IT IS THE CONTRACTOR'S RESPONSIBILITY TO BECOME FAMILIAR WITH ALL PERTINENT EXISTING DRAWINGS AND DETAILS RELEVANT TO THIS PROJECT.

ADDITIONAL SOILS INFORMATION

IN ADDITION TO THE SOIL BORING INFORMATION GIVEN IN THE PLANS, THE SOILS, SUBSURFACE INVESTIGATION REPORT NO. N6175053 PREPARED BY TERRACON CONSULTANTS, INC. DATED 9/9/2021 HAS BEEN INCLUDED IN SECTION 200 "SPECIAL PROVISIONS" OF THE CUYAHOGA COUNTY ENGINEER'S SPECIFICATION BOOKLET FOR REFERENCE.

CONCRETE COVER FOR REINFORCING STEEL

MINIMUM CONCRETE COVER FOR ALL REINFORCING BARS SHALL BE TWO INCHES (2") UNLESS SHOWN OTHERWISE IN THE PLANS.

SEQUENCE OF CONSTRUCTION:

SEE ROADWAY SHEET 14/157 FOR SEQUENCE OF CONSTRUCTION.

UTILITY LINES:

THE ULTILITY(IES), EXCEPT CLEVELAND WATER, SHALL BEAR ALL EXPENSE INVOLVED IN RELOCATING OR INSTALLING THE AFFECTED UTILITY LINES. THE CONTRACTOR AND UTILITY(IES) ARE TO COOPERATE BY ARRANGING THEIR WORK IN SUCH A MANNER THAT INCONVENIENCES TO EITHER WILL BE HELD TO A MINIMUM.

PILE DRIVING:

THE MINIMUM RATED ENERGY OF THE HAMMER USED TO INSTALL THE 12" DIAMETER PILES SHALL BE 11,000 FOOT-POUNDS. THE MINIMUM RATED ENERGY OF THE HAMMER USED TO INSTALL THE 14" DIAMETER PILES SHALL BE 35,000 FOOT-POUNDS. ENSURE THAT STRESSES IN THE PILES DURING DRIVING DO NOT EXCEED 31,500 POUNDS PER SQUARE INCH. THE MINIMUM WALL THICKNESS PER CMS 507.06 FOR THE PROPOSED 14" CAST-IN-PLACE REINFORCED CONCRETE PILES ARE AS FOLLOWS:

1/4" FOR THE REQR ABUTMENT AND FORWARD ABUTMENT PILES
1/2" FOR THE PIER 1 AND PIER 2 PILES

PILE DESIGN LOADS (ULTIMATE BEARING VALUE):

THE ULTIMATE BEARING VALUE IS 125 KIPS PER PILE FOR THE REAR AND FORWARD ABUTMENT PILES. THE ULTIMATE BEARING VALUE IS 355 KIPS PER PILE FOR PIER 1 AND PIER 2 PILES.

REAR ABUTMENT PILES:
24 - 12" CAST-IN-PLACE REINFORCED CONCRETE PILES 55 FEET LONG, ORDER LENGTH
1 DYNAMIC LOAD TESTING ITEM

FORWARD ABUTMENT PILES:
20 - 12" CAST-IN-PLACE REINFORCED CONCRETE PILES 45 FEET LONG, ORDER LENGTH
1 DYNAMIC LOAD TESTING ITEM

PIER 1 PILES:
16 - 14" CAST-IN-PLACE REINFORCED CONCRETE PILES 90 FEET LONG, ORDER LENGTH
1 DYNAMIC LOAD TESTING ITEM

PIER 2 PILES:
16 - 14" CAST-IN-PLACE REINFORCED CONCRETE PILES 85 FEET LONG, ORDER LENGTH
1 DYNAMIC LOAD TESTING ITEM

DECK PLACEMENT DESIGN ASSUMPTIONS:

THE FOLLOWING ASSUMPTIONS OF CONSTRUCTION MEANS AND METHODS WERE MADE FOR THE ANALYSIS AND DESIGN OF THE SUPERSTRUCTURE. THE CONTRACTOR IS RESPONSIBLE FOR THE DESIGN OF THE FALSEWORK SUPPORT SYSTEM WITHIN THESE PARAMETERS AND WILL ASSUME RESPONSIBILITY FOR THE SUPERSTRUCTURE ANALYSIS FOR DEVIATING FROM THESE DESIGN ASSUMPTIONS.

AN EIGHT WHEEL FINISHING MACHINE WITH A MAXIMUM WHEEL LOAD OF 2.25 KIPS.

A MINIMUM OUT TO OUT WHEEL SPACING AT EACH END OF THE MACHINE OF 103".

A MAXIMUM SPACING OF OVERHANG FALSEWORK BRACKETS OF 48".

A MAXIMUM DISTANCE FROM THE CENTERLINE OF THE FASCIA GIRDER TO THE FACE OF THE SAFETY HANDRAIL OF 65".

DESIGN AGENCY
BURGESS & NIPLE
100 WEST ERIE STREET
PAINESVILLE, OHIO 44077

DESIGNED	DRAWN	REVIEWED	DATE
BCS	BCS	DWL	09/2021
CHECKED	REVISED	STRUCTURE FILE NUMBER	
MAB		1876083	

STRUCTURE NOTES 1 OF 4
BRIDGE 00.42
OVER CUYAHOGA RIVER

CUY - OLD
ROCKSIDE ROAD

2 / 44

100
157

P:\PR57030\Cadd\Sheets\ORR_91563_0042_SN001.dwg 14-Sep-21 2:56 PM

ASBESTOS ABATEMENT

1) THE ASBESTOS INSPECTION DETERMINED THAT ASBESTOS IS PRESENT ON THE STRUCTURE (CUY-OLD ROCKSIDE ROAD BRIDGE) AND NEARBY ELECTRICAL BOXES IN EXCESS OF THE REGULATORY LIMITS AND REQUIRES ABATEMENT. THE CITY WILL PROVIDE THE ASBESTOS INSPECTION REPORT CONTAINING THE QUANTITIES AND LOCATIONS OF THE ASBESTOS CONTAINING MATERIALS AT THE PRE-CONSTRUCTION MEETING. A LICENSED HAZARD EVALUATION SPECIALIST WILL PROVIDE A PARTIALLY COMPLETED NOTIFICATION OF DEMOLITION AND RENOVATION FORM (NDRF) WITH THE ASBESTOS INSPECTION REPORT. THE ABATEMENT CONTRACTOR SHALL COMPLETE THE NDRF. ABATE, TRANSPORT, AND DISPOSE ALL ASBESTOS CONTAINING MATERIAL ABOVE ALLOWABLE REGULATORY LIMITS IN ACCORDANCE WITH ALL FEDERAL, STATE, AND LOCAL REGULATIONS. DISPOSE THE ASBESTOS CONTAINING MATERIALS IN A LANDFILL LICENSED BY THE LOCAL HEALTH DEPARTMENT. AND PERMITTED BY THE OHIO ENVIRONMENTAL PROTECTION AGENCY - DIVISION OF AIR POLLUTION CONTROL TO ACCEPT TO ACCEPT ASBESTOS CONTAINING MATERIAL. THE REMOVAL AND DISPOSAL OF ALL ASBESTOS CONTAINING MTERIAL MUST COMPLY WITH THE OHIO ADMINISTRATIVE CODE (OAC) REGULATIONS AND THE NATIONAL EMISSION STANDARD FOR HAZARDOUS AIR POLLUTANTS (NESHAP) STANDARD FOR ASBESTOS.

ELECTRONIC SUBMISSION:
SUBMIT A COMPLETED ELECTRONIC NOTIFICATION OF DEMOLITION AND RENOVATION FORM (NDRF), APPLICABLE FEES, AND THE ASBESTOS INSPECTIONS REPORT TO THE OEPA AT LEAST 10 DAYS PRIOR TO ANY DEMOLITION ACTIVITY, RENOVATION ACTIVITY, OR BOTH. SUBMIT THE NDRF AND PAYMENT ALONG WITH THE ASBESTOS INSPECTION REPORT USING THE OEPA eBUSINESS CENTER. SUBMIT ONE ELECTRONIC PDF COPY AND ONE HARD COPY OF THE NDRF TO THE ENGINEER. THE ENGINEER WILL PROVIDE ONE COPY TO THE DISTRICT ENVIRONMENTAL STAFF.

HARD COPY SUBMISSION:
THE CONTRACTOR MAY SUBMIT A HARD COPY OF THE COMPLETED NDRF AND PAYMENT ALONG WITH THE ASBESTOS INSPECTION REPORT. FOLLOW MAILING INSTRUCTIONS ON THE NDRF. CHECK WITH LOCAL HEALTH DEPARTMENT, JOHN SOBOLEWSKI AT 216-201-200, EXT. 1515, TO DETERMINE IF THEY REQUIRE HARD COPY SUBMITTAL. SUBMIT THE COMPLETED NDRF TO OEPA AT LEAST 10 DAYS PRIOR TO DEMOLITION ACTIVITY, RENOVATION ACTIVITY, OR BOTH. RETAIN COMPLETED NDRF AND SUBMIT ONE COPY TO THE ENGINEER AND ONE COPY TO THE DISTRICT ENVIRONMENTAL STAFF, MARK CARPENTER, ODOT D-12, 216-583-2089.

BASIS OF PAYMENT:
SUBMIT ALL DOCUMENTATION RELATED TO THE ABATEMENT, TRANSPORT, AND DISPOSAL OF ASBESTOS CONTAINING MATERIALS TO THE ENGINEER WITHIN TWO WEEKS OF COMPLETION. THE ENGINEER WILL PROVIDE A COPY OF THE DOCUMENTATION TO THE DISTRICT ENVIRONMENTAL STAFF. PAYMENT FOR THIS WORK SHALL BE MADE AT THE BID PRICE OF LUMP SUM.

THE FOLLOWING ITEM HAS BEEN INCLUDED IN THE ESTIMATED QUANTITIES FOR THE WORK NOTED ABOVE:

ITEM SPECIAL - WORK INVOLVING
ASBESTOS CONTAINING MATERIALS — LUMP SUM

3" PRECOMPRESSED FOAM JOINT

DESCRIPTION: THIS WORK SHALL CONSIST OF SEALING JOINTS USING PRECOMPRESSED FOAM JOINT IN ACCORDANCE WITH THESE SPECIFICATIONS, IN REASONABLY CLOSE CONFORMITY WITH THE PLANS AND MANUFACTURER'S SPECIFICATIONS AND RECOMMENDATIONS AND AS DIRECTED BY THE ENGINEER.

MATERIALS: THE MATERIAL SHALL BE A PRECOMPRESSED FOAM JOINT (PFJ) SUCH AS THE EMSEAL BEJS SYSTEM, SCHUL INTERNATIONAL SEALTITE 50N, WATSON BOWMAN ACME WABO HSEAL OR AN APPROVED EQUAL. THE FOAM JOINT SYSTEM IS COMPRISED OF THREE COMPONENTS:

1. MODIFIED ACRYLIC IMPREGNATED FOAM COMPRESSED 5-TIMES AND FACTORY COATED WITH HIGHWAY GRADE, FUEL RESISTANT SILICONE;

2. FIELD-APPLIED EPOXY ADHESIVE PRIMER;

3. FIELD-APPLIED SILICONE CORNER BEADS.

EMSEAL BEJS SYSTEM CAN BE OBTAINED FROM EMSEAL JOINT SYSTEMS, LTD. 23 BRIDLE LANE, SUITE 3, WESTBOROUGH, MA 10581-1228. THEIR PHONE NUMBER IS 1-800-526-8365. SCHUL INTERNATIONAL SEALTITE 50N SYSTEM CAN BE OBTAINED FROM SCHUL INTERNATIONAL, ONE INDUSTRIAL DRIVE, PELHAM, NH 03076. THEIR PHONE NUMBER IS 1-800-848-1120. WATSON BOWMAN ACME WABO HSEAL SYSTEM CAN BE OBTAINED FROM WATSON BOWMAN ACME, 95 PINEVIEW DRIVE, AMHERST, NY 14228. THEIR PHONE NUMBER IS 1-800-677-4922. ALL MATERIAL SHALL BE STORED AND INCORPORATED IN THE WORK AS RECOMMENDED BY THE MANUFACTURER.

SURFACE PREPARATION: THE FACES TO WHICH THE FOAM JOINT MUST ADHERE SHALL BE BLASTED CLEAN AND BE FREE FROM FOREIGN MATERIAL SUCH AS DIRT, DUST, GREASE, FORM RELEASE AGENTS AND ANY OTHER MATERIAL DETRIMENTAL TO ADHESION OF THE SEALANT. BLASTING ABRASIVE CONTAINING MORE THAN 1% FREE SILICA SHALL NOT BE ALLOWED.

INSTALLATION: THE FOAM JOINT SHALL BE INSTALLED ONLY WHEN THE SURFACES ARE DRY AND THE SURFACE TEMPERATURE IS ABOVE 50 DEGREES FAHRENHEIT. NEW CONCRETE MUST HAVE BEEN AIR CURED AT LEAST 7 DAYS IN GOOD DRYING WEATHER. DO NOT PROCEED WITH INSTALLATION UNDER ADVERSE WEATHER CONDITIONS. BOTH CONCRETE SURFACES ADJACENT TO THE FOAM JOINT SHALL BE PRIMED WITH ADHESIVE AS RECOMMENDED BY THE MANUFACTURER. THE FOAM JOINT SHALL BE REMOVED FROM THE PACKAGING, COATED WITH ADHESIVE AS RECOMMENDED BY THE MANUFACTURER AND ITS NARROW EDGE INSERTED INTO THE JOINT OPENING. THE FOAM JOINT SHALL BE WEDGED IN PLACE WHILE IT RECOVERS. AT TEMPERATURES ABOVE 68 DEGREES FAHRENHEIT THE MATERIAL WILL RECOVER IN A FEW HOURS. AT TEMPERATURES BELOW 68 DEGREES FAHRENHEIT, THE RECOVERY SHALL BE ACCELERATED BY HEATING WITH AN OPEN FLAME, GAS BURNER, INFRA-RED LAMP OR HOT AIR BLOWER. JOINTS SHALL BE KEPT TO A MINIMUM AND MADE BY PUSHING MITERS TOGETHER AND APPLYING A THIN BEAD OF SILICONE SEALANT ALONG THE MITERED JOINT IN THE SILICONE FACING. THE FOAM JOINT IS TO BE INSTALLED APPROXIMATELY 1/4" RECESSED FROM THE SURFACE SUCH THAT WHEN THE FIELD APPLIED CORNER BEADS OF SILICONE ARE INSTALLED THE SYSTEM WILL BE ESSENTIALLY FLUSH WITH THE SUBSTRATE SURFACE. ONCE THE FOAM JOINT HAS FULLY EXPANDED ACROSS THE JOINT GAP A 1/4" X 1/4" BEAD OF SILICONE SHALL BE GUNNED AND TOOLED INTO EACH OF THE CORNERS FORMED AT THE SUBSTRATE-TO-BELLOS INTERFACES.

INCLUDE PRECOMPRESSED FOAM JOINT WITH ITEM 511- CLASS QC1 CONCRETE WITH QC/QA ABUTMENT INCLUDING FOOTING, AS PER PLAN FOR PAYMENT.

ITEM 202 - STRUCTURE REMOVED OVER 20 FOOT SPAN, AS PER PLAN:

THIS ITEM SHALL INCLUDE THE ELEMENTS INDICATED IN THE PLANS AND GENERAL NOTES AND THAT ARE NOT SEPARATELY LISTED FOR PAYMENT. LIMITS OF REMOVAL SHALL BE AS SHOWN ON THE PLANS OR AS DIRECTED BY THE ENGINEER. ITEMS TO BE REMOVED INCLUDE THE EXISTING STRUCTURE IN ITS ENTIRETY TO ELEVATIONS DETAILED IN THE PLANS, THE EXISTING TIMBER PILING BETWEEN THE SLOPE PROTECTION AND THE RIVER TO THE EXTENT REQUIRED TO BUILD THE PROPOSED PIERS, EXISTING SUBSTRUCTURE FOUNDATION PILES THAT INTERFERE WITH NEW CONSTRUCTION, ANY DEBRIS BUILDUP ON THE EXISTING PIER, AND MISCELLANEOUS ITEMS THAT ARE NOT SHOWN TO BE INCORPORATED INTO THE FINAL CONSTRUCTION AND ARE DIRECTED TO BE REMOVED BY THE ENGINEER. SUBMIT WORKING DRAWINGS AND CALCULATIONS IN ACCORDANCE WITH CMS 501.05.

ALL CONCRETE, REINFORCING STEEL ASPHALT, ETC. REMOVED FROM THE STRUCTURE AND NOT REUSED SHALL, UNLESS OTHERWISE SPECIFIED, BECOME THE PROPERTY OF THE CONTRACTOR AND SHALL BE REMOVED BY HIM/HER FROM THE SITE. THE MATERIALS SHALL NOT BE PERMITTED TO REMAIN ON SITE, WITHIN THE RIGHT-OF-WAY OR ELSEWHERE UNLESS SPECIFIED BY THE ENGINEER.

THE CONTRACTOR SHALL BE RESPONSIBLE FOR WORK NECESSARY TO COORDINATE WITH THE COUNTY. THE USE OF EXPLOSIVES AND HEADACHE BALLS WILL NOT BE PERMITTED. THE METHOD OF REMOVAL SHALL BE APPROVED BY THE ENGINEER. THE COUNTY WILL MEASURE THE QUANTITY OF REMOVALS ON A LUMP SUM BASIS AT THE CONTRACT BID PRICE FOR ITEM 202 PORTIONS OF STRUCTURE REMOVED OVER 20 FOOT SPAN, AS PER PLAN.

ITEM 208 - VIBRATION CONTROL AND MONITORING, AS PER PLAN

STRUCTURES OF INTEREST INCLUDE, BUT ARE NOT LIMITED TO THE FOLLOWING:

- BUILDING AT 8111 ROCKSIDE RD, CLEVELAND, OH 44125
- BUILDING AT 8001 ROCKSIDE RD, CLEVELAND, OH 44125
- BUILDING AT 6150 W CANAL RD, VALLEY VIEW, OH 44125
- BUILDING AT 7919 OLD ROCKSIDE RD, CLEVELAND, OH 44125
- EXISTING/RELOCATED GAS LINE ALONG THE NORTH SIDE OF OLD ROCKSIDE RD
- EXISTING/RELOCATED WATER LINE SOUTH OF OLD ROCKSIDE RD

MONITOR GROUND VIBRATIONS CAUSED BY PILE DRIVING TO MINIMIZE THE POTENTIAL DAMAGE TO EXISTING STRUCTURES.

RETAIN AN EXPERIENCED VIBRATION SPECIALIST TO ESTABLISH THE ACCEPTABLE VIBRATION LIMITS AND TO PERFORM THE VIBRATION MONITORING. USE A VIBRATION SPECIALIST THAT IS AN EXPERT IN THE INTERPRETATION OF VIBRATION DATA, AND WHO MEETS ONE OF THE FOLLOWING CRITERIA: 1) IS A REGISTERED ENGINEER WITH AT LEAST TWO YEARS OF PROVEN EXPERIENCE IN MONITORING VIBRATIONS ON SIMILAR CONSTRUCTION PROJECTS, OR 2) HAS AT LEAST FIVE YEARS OF PROVEN EXPERIENCE IN MONITORING VIBRATIONS ON SIMILAR CONSTRUCTION PROJECTS. DO NOT USE A VIBRATION SPECIALIST THAT IS AN EMPLOYEE OF THE CONTRACTOR.

SUBMIT A RESUME OF THE CREDENTIALS OF THE PROPOSED VIBRATION SPECIALIST AT OR BEFORE THE PRECONSTRUCTION MEETING. INCLUDE IN THE RESUME A LIST OF CONSTRUCTION PROJECTS ON WHICH THE VIBRATION SPECIALIST WAS RESPONSIBLY IN CHARGE OF MONITORING THE VIBRATIONS. LIST A DESCRIPTION OF THE PROJECTS, WITH DETAILS OF THE VIBRATION INTERPRETATIONS MADE ON THE PROJECT. LIST THE NAMES AND TELEPHONE NUMBERS OF PROJECT OWNERS WITH SUFFICIENT KNOWLEDGE OF THE PROJECTS TO VERIFY THE SUBMITTED INFORMATION. OBTAIN THE ENGINEER'S ACCEPTANCE OF THE VIBRATION SPECIALIST BEFORE BEGINNING ANY PILE DRIVING WORK. ALLOW 30 DAYS FOR THE REVIEW OF THIS DOCUMENTATION.

USE SEISMOGRAPHS CAPABLE OF CONTINUOUSLY RECORDING THE PEAK PARTICLE VELOCITY FOR THREE MUTUALLY PERPENDICULAR COMPONENTS OF VIBRATION, AND OF PROVIDING A PERMANENT RECORD OF THE ENTIRE VIBRATION EVENT. USE A SUFFICIENT NUMBER OF SEISMOGRAPHS TO PROVIDE REDUNDANCY IN CASE ONE DEVICE SHOULD FAIL. SUBMIT A PLAN OF THE PROPOSED SEISMOGRAPH LOCATIONS TO THE ENGINEER FOR REVIEW.

THE VIBRATION SPECIALIST SHALL PERFORM THE FOLLOWING:

1. MEASURE THE AMBIENT GROUND VIBRATIONS NEAR EXISTING STRUCTURES BEFORE PILE DRIVING BEGINS.
2. ESTABLISH VIBRATION LIMITS TO MINIMIZE POTENTIAL DAMAGE TO EXISTING STRUCTURES AND EXPLAIN WHY THEY ARE BEING USED TO THE ENGINEER BEFORE DRIVING PILES NEAR EXISTING STRUCTURES.
3. MONITOR GROUND VIBRATIONS DURING PILE DRIVING.
4. IMMEDIATELY INFORM THE CONTRACTOR AND ENGINEER IF THE VIBRATION LIMITS ARE REACHED OR EXCEEDED.
5. FURNISH THE DATA RECORDED AND INCLUDE THE FOLLOWING:
   A. IDENTIFICATION OF SEISMOGRAPH.
   B. DISTANCE AND DIRECTION OF SEISMOGRAPH FROM PILE DRIVING.
   C. START TIME AND DURATION OF PILE DRIVING.
   D. LIST OF PILES DRIVEN DURING EACH MONITORING INTERVAL.

IMMEDIATELY SUSPEND ALL PILE DRIVING IF THE VIBRATION LIMITS ARE REACHED OR EXCEEDED. EVALUATE ALTERNATIVE CONSTRUCTION PROCEDURES, SUCH AS PREBORED HOLES, TO REDUCE THE VIBRATIONS.

SUBMIT THREE COPIES OF THE FINAL REPORT WHICH CONTAINS ALL MEASUREMENTS, INTERPRETATIONS, AND RECOMMENDATIONS TO THE ENGINEER.

THE COUNTY WILL PAY FOR THIS ITEM AT THE CONTRACT LUMP SUM PRICE FOR ITEM 208 - VIBRATION CONTROL AND MONITORING, AS PER PLAN. THE COUNTY WILL PAY THE FINAL TWENTY PERCENT AFTER THE ENGINEER RECEIVES THE FINAL REPORT.

THE COUNTY WILL PAY ACCORDING TO C&MS 109.05 FOR ALTERNATIVE CONSTRUCTION PROCEDURES THAT THE ENGINEER DETERMINES ARE NECESSARY TO REDUCE VIBRATIONS AND ARE NOT A CONTINGENCY QUANTITY IN THESE PLANS.

ITEM 503 - UNCLASSIFIED EXCAVATION, AS PER PLAN

ALL PROVISIONS OF CMS 503 SHALL APPLY EXCEPT THAT THE USE OF SLAG AS BACKFILL MATERIAL IN ANY FORM (503.08, 203.02.R, AND 703.16) IS NOT PERMITTED. THE BACKFILL MATERIAL SHALL BE MATERIAL CONFORMING TO CMS 703.17 (CMS 304 MATERIAL) AND MEET THE COMPACTION REQUIREMENTS OF CMS 304.05. IN ADDITION, THE BACKFILL MATERIAL SHALL BE PLACED AND COMPACTED IN 6" LIFTS.

ITEM 507 - 12" AND 14" CAST-IN PLACE REINFORCED CONCRETE PILES, DRIVEN, AS PER PLAN

PILE DRIVING PROCEDURES SHALL CONSIDER VIBRATIONS TRANSMITTED TO ADJACENT BUILDINGS AND ALTERED AS NECESSARY TO REDUCE PEAK PARTICLE VELOCITY AT NO ADDITIONAL COST TO THE COUNTY. SEE THIS SHEET FOR ITEM 208 - VIBRATION CONTROL AND MONITORING, AS PER PLAN NOTE. A CONTINGENCY QUANTITY OF 300 FEET HAS BEEN INCLUDED IN THE ESTIMATED QUANTITIES.

ITEM 507 - 12" AND 14" CAST-IN-PLACE REINFORCED CONCRETE PILES, FURNISHED, AS PER PLAN

STEEL PIPE SHALL BE ASTM A252, GRADE 2 YIELD STRENGTH 35 KSI (12" DIAMETER CAST-IN-PLACE REINFORCED CONCRETE PILES) AND ASTM A252, GRADE 3 YIELD STRENGTH 45 KSI (14" DIAMETER CAST-IN-PLACE REINFORCED CONCRETE PILES).

THIS ITEM SHALL INCLUDE SPLICES AND SHALL BE USED WHEN PREBORING IS REQUIRED AND THE PILE NEEDS TO BE LENGTHENED TO OBTAIN THE ULTIMATE BEARING VALUE SPECIFIED. A CONTINGENCY QUANTITY OF 300 FEET HAS BEEN INCLUDED IN THE ESTIMATED QUANTITIES.

ITEM 507 - PREBORED HOLES, AS PER PLAN

IF THE VIBRATION LEVELS ON THE STRUCTURES BEING MONITORED DURING PILE DRIVING OPERATIONS EXCEED THE ALLOWABLE PEAK PARTICLE VELOCITY LIMITS DETERMINED BY THE VIBRATION SPECIALIST, PREBORED HOLES MAY BE USED AT THE DIRECTION OF THE VIBRATION SPECIALIST AND THE ACCEPTANCE OF THE ENGINEER. THE DIAMETER OF THE PREBORED HOLE SHALL NOT BE LESS THAN THE DIAMETER OF THE PILE NOR GREATER THAN 2 INCHES MORE THAN THE PILE DIAMETER. A CONTINGENCY QUANTITY OF 300 FEET HAS BEEN INCLUDED IN THE ESTIMATED QUANTITIES. MEASUREMENT AND PAYMENT WILL BE ACCORDING TO CMS ITEM 507.

ITEM 509 - EPOXY COATED REINFORCING STEEL, AS PER PLAN

IN ADDITION TO THE PROVISIONS OF ITEM 509, FIELD BEND AND/OR FIELD CUT THE REINFORCING STEEL DESIGNATED IN THE PLANS, AS NECESSARY, IN ORDER TO MAINTAIN THE REQUIRED CLEARANCES AND BAR SPACINGS. REPAIR ALL DAMAGE TO THE EPOXY COATING, AS A RESULT OF THIS WORK, ACCORDING TO 709.00.

P:\PR57030\Cadd\Sheets\ORR_91563_0042_SN002.dwg 25-Oct-21 11:25 AM

DESIGN AGENCY
BURGESS & NIPLE
100 WEST ERIE STREET
PAINESVILLE, OHIO 44077

DESIGNED	DRAWN	REVIEWED	DATE
BCS	BCS	DWL	09/2021
CHECKED	REVISED	STRUCTURE FILE NUMBER	
MAB		1876083	

STRUCTURE NOTES 2 OF 4
BRIDGE 00.42
OVER CUYAHOGA RIVER

CUY - OLD
ROCKSIDE ROAD

ITEM 511 - CLASS QC2 CONCRETE WITH QC/QA, BRIDGE DECK, AS PER PLAN:
ITEM 511 - CLASS QC1 CONCRETE WITH QC/QA, PIER ABOVE FOOTINGS, AS PER PLAN:
ITEM 511 - CLASS QC1 CONCRETE WITH QC/QA, ABUTMENT INCLUDING FOOTINGS, AS PER PLAN:
ITEM 511 - CLASS QC1 CONCRETE WITH QC/QA, FOOTING, AS PER PLAN:
ITEM 511 - CLASS QC2 CONCRETE WITH QC/QA, SIDEWALK, AS PER PLAN:

ALL COARSE AGGREGATE SHALL HAVE AN ABSORPTION OF 1.00% OR GREATER AS DEFINED BY ASTM C127.

BASIS OF PATMENT: PAYMENT FOR THE ABOVE COMPLETED AND ACCEPTED QUANTITIES WILL BE MADE AT THE CONTRACT ID PRICE FOR:

ITEM	UNITS	DESCRIPTION
511	CU YD	CLASS QC2 CONCRETE WITH QC/QA, BRIDGE DECK, AS PER PLAN
511	CU YD	CLASS QC1 CONCRETE WITH QC/QA, PIER ABOVE FOOTINGS, AS PER PLAN
511	CU YD	CLASS QC1 CONCRETE WITH QC/QA, ABUTMENT INCLUDING FOOTING, AS PER PLAN
511	CU YD	CLASS QC1 CONCRETE WITH QC/QA, FOOTING, AS PER PLAN
511	CU YD	CLASS QC2 CONCRETE WITH QC/QA, SIDEWALK, AS PER PLAN

ITEM 511 - CONCRETE, MISC.: ARCHITECTURAL TREATMENT

A. GENERAL

THE WORK TO BE DONE UNDER THIS ITEM SHALL INCLUDE THE CONSTRUCTION OF TEXTURED AND COLORED CONCRETE SURFACES USING FORM LINERS AND A COLOR STAIN SYSTEM DESIGNED TO DUPLICATE CLOSELY THE APPEARANCE OF NATURAL STONE.

THE MANUFACTURER(S) OF THE FORM LINER AND COLOR STAIN SYSTEM SHALL HAVE FIVE (5) YEARS EXPERIENCE MAKING FORM LINERS AND COLOR STAINS TO MATCH NATURAL STONE SHAPES, SURFACE TEXTURES AND COLORS. THE PATTERN AND COLORING SHALL FOLLOW THE MANUFACTURER'S STANDARD DETAILS AND SPECIFICATIONS FOR THE CHOSEN DESIGN. THE CONTRACTOR SHALL HAVE A MINIMUM OF FIVE (5) YEARS EXPERIENCE WITH CONSTRUCTING VERTICALLY FORMED ARCHITECTURAL CONCRETE AND SHALL BE TRAINED IN THE MANUFACTURER'S SPECIAL TECHNIQUES IN ORDER TO ACHIEVE THE DESIRED CONCRETE APPEARANCE.

THE FORM LINER PATTERN TO BE USED ON THE PARAPETS SHALL BE "RUSTIC ASHLAR #11003" AS MANUFACTURED BY CUSTOM ROCK INTERNATIONAL WWW.CUSTOMROCK.COM, FITZGERALD FORMLINERS WWW.FORMLINERS.COM, SPEC FORMLINERS WWW.SPECFORMLINERS.COM, OR APPROVED EQUAL. THE LOCAL REPRESENTATIVE FOR CUSTOM ROCK INTERNATIONAL IS BOMANITE DESIGNS, INC., 6001 PINECONE DRIVE, MENTOR, OHIO 44060, PH: (440) 350-3900. THE ARCHITECTURAL RELIEF SHALL NOT EXCEED 2". THERE SHALL BE A 4" SIMULATED SANDSTONE OR CONCRETE CAP ON ALL THE PARAPETS AS DETAILED IN THE PLANS.

THE FORM LINER PATTERN TO BE USED ON THE ABUTMENTS, RETAINING WALL, PIER STEMS AND WINGWALLS SHALL BE "GEORGIA ASHLAR #16999" AS MANUFACTURED BY FITZGERALD FORMLINERS 1500 E. CHESTNUT AVENUE, SANTA ANA, CALIFORNIA, 92701, PH: (800) 547-7760, CUSTOMROCK FORMLINER WWW.CUSTOMROCK.COM, SPEC FORMLINERS WWW.SPECFORMLINERS.COM, OR APPROVED EQUAL. THE PART (PATTERN) SIZE SHALL BE 72"WX24"H. THE ARCHITECTURAL RELIEF SHALL NOT EXCEED 2".

B. PRODUCTS

FORM LINERS SHALL BE REUSABLE, MADE OF HIGH STRENGTH URETHANE AND BE EASILY ATTACHABLE TO CONCRETE FORMS. THEY SHALL NOT COMPRESS MORE THAN ONE-QUARTER INCH (1/4") WHEN CONCRETE IS POURED AT A RATE OF TEN VERTICAL FEET (10'-0") PER HOUR. FORM LINERS SHALL BE REMOVABLE WITHOUT CAUSING DETERIORATION OF THE CONCRETE SURFACE OR ANY UNDERLINING CONCRETE. USE A RELEASE AGENT THAT IS COMPATIBLE WITH THE FORM LINER AND WITH THE COLOR STAIN SYSTEM TO BE APPLIED TO THE CONCRETE SURFACES AND PROVIDE THE ENGINEER WITH THE MANUFACTURER"S SPECIFICATIONS FOR PRODUCT APPLICATION.

METAL OR FIBERGLASS FORM TIES SHALL BE USED. FORM TIES SHALL BE DESIGNED TO SEPARATE A MINIMUM OF ONE INCH (1") BACK FROM THE FINISHED SURFACE LEAVING ONLY A NEAT HOLE THAT CAN BE PLUGGED WITH PATCHING MATERIAL. A SAMPLE AND/OR DESCRIPTION OF THE FORM TIE SHOWING ITS METHOD OF SEPARATION WHEN FORMS ARE REMOVED SHALL BE SUPPLIED TO THE ENGINEER FOR APPROVAL PRIOR TO USE.

THE COLOR STAIN MIX SHALL BE AN ACRYLIC RESIN-BASED OR ACID-BASED STAIN FORMULATED TO PENETRATE FINISHED CONCRETE SURFACES. UNLESS OTHERWISE SPECIFIED IN THE PLAN DETAILS, THE COLOR(S) NEEDED SHALL BE THOSE REQUIRED TO ACHIEVE A NATURAL STONE COLOR VARIATION IN THE FINISHED CONCRETE TO COMPLEMENT THE SITE AND ITS SURROUNDINGS. THESE COLORS WOULD TYPICALLY INCLUDE A RANGE OF BROWNS, TANS, BUFFS, GRAYS, WHITES AND BLACKS. THE STAIN MIX SHALL CREATE A SURFACE FINISH THAT IS BREATHABLE (WILL ALLOW WATER VAPOR TRANSMISSION) AND THAT RESISTS DETERIORATION FROM WATER, ACID, ALKALI, FUNGI AND SUNLIGHT (UV). IT SHALL ALSO MEET MILDEW RESISTANCE REQUIREMENTS IN ACCORDANCE WITH FEDERAL TEST METHOD STD. 141, METHOD 6271.2, AND REQUIREMENTS FOR WEATHERING RESISTANCE OF A MINIMUM OF 1000 HOURS ACCELERATED EXPOSURE MEASURED IN ACCORDANCE WITH ASTM G152, G153, G154 OR G155.

THE MANUFACTURER OF THE COLOR STAIN SHALL ALSO SUPPLY OR RECOMMEND A COMPATIBLE CLEAR SEALER TO BE APPLIED TO ALL TEXTURED AND COLOR STAINED CONCRETE SURFACES. THE ENGINEER SHALL BE PROVIDED WITH THE MANUFACTURER"S SPECIFICATIONS FOR APPLYING THE STAIN AND CLEAR SEALER.

C. SHOP DRAWINGS AND MOCKUPS

IT SHALL BE UNDERSTOOD THAT ANY ARCHITECTURAL TREATMENT(S) GRAPHICALLY SHOWN THROUGHOUT THE PLAN DETAILS ARE FOR ILLUSTRATIVE PURPOSES ONLY AND MAY NOT REPRESENT THE ACTUAL PATTERN LAYOUT, SCALE, ETC. OF THE FINISHED WORK. PRIOR TO BEGINNING ANY WORK, THE CONTRACTOR SHALL BE RESPONSIBLE FOR SUBMITTING REPRESENTATIVE SHOP DRAWINGS SCALED SUFFICIENTLY ENOUGH TO DETAIL THE LAYOUT OF THE FINISHED PATTERN AND JOINT LOCATIONS, FORM TIE LOCATIONS, AREAS OF FORM LINER TERMINATION INCLUDING PLACEMENT OF POLYSTYRENE FOAM FILLER MATERIAL BETWEEN FORMWORK AND STRUCTURAL CONCRETE SURFACES, END, EDGE, CORNER AND OTHER SPECIAL CONDITIONS TO THE ENGINEER FOR ACCEPTANCE. A PREINSTALLATION MEETING SHALL BE SCHEDULED WITH THE ENGINEER, CONTRACTOR AND MANUFACTURER"S REPRESENTATIVE TO ASSURE THE UNDERSTANDING OF FORM LINER USE, POLYSTYRENE FOAM USE, COLOR APPLICATION, REQUIREMENTS FOR CONSTRUCTING THE MOCKUPS AND COORDINATION OF THE WORK.

ONCE THE REPRESENTATIVE SHOP DRAWINGS HAVE BEEN ACCEPTED, THE CONTRACTOR SHALL CONSTRUCT A MINIMUM OF TWO (2) MOCKUPS ON SITE BEFORE ANY PERMANENT ARCHITECTURAL TREATMENT IS ADDED TO THE STRUCTURE. THE MOCKUPS MUST UTILIZE THE SAME MATERIALS, METHODS AND WORK FORCE THAT WILL BE USED FOR THE PROJECT. THE ENGINEER, MUNICIPALITY AND/OR THE STAKEHOLDERS MAY DETERMINE ANY SPECIFIC REQUIREMENTS, LOCATION OR SPECIAL CONSIDERATIONS TO BE INCORPORATED IN THE MOCKUPS. THE MOCKUPS MUST DEMONSTRATE THE FOLLOWING:

1. BE OF SUFFICIENT SIZE TO ADEQUATELY SHOW THE SELECTED PATTERN, TEXTURE AND COLORATION.
2. FORM LINER BUTT JOINTS AND, IF APPROPRIATE, CONTINUATION OF THE PATTERN THROUGH AN EXPANSION JOINT.
3. CONTINUATION OF THE PATTERN AND TEXTURE AROUND CORNERS OF ADJOINING SURFACES.
4. APPLICATION OF THE COLOR STAIN AND CLEAR SEALER. ALL CONCRETE WORK MUST BE COMPLETED AND CURED FOR A MINIMUM OF 28 DAYS BEFORE THE STAIN IS APPLIED.

AFTER THE TEXTURE AND COLORING ARE COMPLETE, THE MUNICIPALITY, STAKEHOLDERS AND THE ENGINEER SHALL EVALUATE THE MOCKUPS. THEY MAY REQUEST CHANGES OF COLOR, APPLICATION TECHNIQUE, ETC. IF NOT COMPLETELY SATISFIED WITH WHAT IS PRESENTED. ONCE SATISFIED, THEY SHALL CHOOSE WHICH MOCKUP WILL SERVE AS THE QUALITY CONTROL STANDARD FOR THE PROJECT. DISPOSE OF ALL MOCKUPS AFTER COMPLETION OF THE PROJECT.

D. CONSTRUCTION

SCHEDULE COLOR STAIN APPLICATION AFTER ADJACENT EARTHWORK IS COMPLETED TO AVOID CONTAMINATING OR DAMAGING THE CONCRETE SURFACES. DELAY ADJACENT PLANTINGS UNTIL COLOR STAIN AND CLEAR SEALER APPLICATIONS HAVE BEEN COMPLETED AND CURED. COORDINATE ALL WORK TO PERMIT COLORING AND SEALING WITHOUT INTERFERENCE FROM OTHER TRADES.

PREPARE THE FORM LINERS BY CLEANING AND REMOVING ALL BUILD-UP AND FOREIGN MATTER PRIOR TO EACH CONCRETE POUR. THE FORM LINERS SHALL BE INSPECTED FOR ANY BLEMISHES OR TEARS. REPAIR ANY SUCH DEFECTS PER MANUFACTURER"S RECOMMENDATIONS. REPLACE ANY FORM LINER IF, AFTER BEING REPAIRED, IT YIELDS A CONCRETE TEXTURE THAT IS INCONSISTENT WITH THE APPROVED MOCKUP. REPLACE ANY FORM LINER THAT CANNOT BE REPAIRED AT NO ADDITIONAL COST TO THE PROJECT.

PLACE ADJACENT FORM LINERS WITH LESS THAN ONE-QUARTER INCH (1/4") SEPARATION BETWEEN EACH LINER WHILE MAINTAINING THE CONTINUITY OF THE FORMED PATTERN. WHERE THE PATTERN IS TO CONTINUE AROUND ADJOINING SIDES OF THE PARAPET, WALL, ETC., CAREFULLY ALIGN THE MORTAR JOINTS AND RUSTICATIONS ON EACH SIDE AND PROVIDE AS MUCH RELIEF AS POSSIBLE TO ACHIEVE A REALISTIC APPEARANCE OF THE FINISHED SURFACES. SECURELY ATTACH LINERS TO FORMWORK AS PER THE MANUFACTURER'S RECOMMENDATIONS. APPLY A FORM LINER RELEASE AGENT PER THE MANUFACTURER"S RECOMMENDATIONS. PLACE FORM TIES AT THE THINNEST POINTS OF THE FORM LINER (HIGH POINTS OF THE FINISHED SURFACE).

FOR CONCRETE SURFACE AREAS THAT DO NOT REQUIRE FORM LINER TREATMENT (E.G. NON-VISIBLE SURFACES OF ABUTMENTS AND WINGWALLS BELOW FINAL GRADE), THE VOID BETWEEN THE STRUCTURAL CONCRETE SURFACES AND THE FORMWORK DUE TO THE DISCONTINUED USE OF THE FORM LINERS SHOULD BE FILLED WITH A POLYSTYRENE FOAM MATERIAL (E.G. STYROFOAM) EQUAL IN THICKNESS TO THE FORM LINER BEING USED. SHOULD THE CONTRACTOR CHOOSE NOT TO USE A FILLER MATERIAL IN THESE AREAS, FAVORING INSTEAD TO ALLOW POURED CONCRETE TO FILL THE VOIDS, THE QUANTITY OF CONCRETE USED FOR THIS PURPOSE WILL BE CONSIDERED INCIDENTAL TO WHAT IS REQUIRED TO ACHIEVE THE DESIRED ARCHITECTURAL TREATMENT AND SHALL NOT WARRANT ADDITIONAL COMPENSATION BEYOND THE UNIT PRICE BID FOR THIS ITEM OF WORK.

FORM STRIPPING AND RELATED CONSTRUCTION SHALL AVOID CREATING DEFECTS IN THE FINISHED CONCRETE SURFACES. WHERE FORM LINERS ABUT, CAREFULLY BLEND THE CONCRETE TO MATCH THE BALANCE OF THE PATTERN, AVOIDING VISIBLE SEAMS, FORM MARKS AND ROUGH EDGES. NEATLY PATCH ALL SURFACE VOIDS AND THE HOLES REMAINING AFTER DISENGAGING THE PROTRUDING PORTION OF THE FORM TIES SO THAT THEY WILL NOT BE VISIBLE AFTER COLORING THE CONCRETE SURFACE.

WHERE AN EXPANSION JOINT MUST OCCUR AT A POINT OTHER THAN AT A MORTAR JOINT OR SIMILAR RUSTICATION, SUCH AS AT THE FACE OF CONCRETE TEXTURE THAT IS TO HAVE THE APPEARANCE OF STONE, THE CONTRACTOR SHALL CONTACT THE MANUFACTURER FOR THE PROPER TREATMENT OF THE EXPANSION MATERIAL.

CLEAN SURFACE PRIOR TO APPLYING THE COLOR STAIN TO ASSURE THAT THE SURFACE IS FREE OF LATENCE, DIRT, DUST, GREASE, EFFLORESCENCE, PAINT, OR FOREIGN MATERIAL FOLLOWING THE MANUFACTURER'S INSTRUCTIONS FOR SURFACE PREPARATION. THE PREFERRED METHOD TO REMOVE LAITANCE IS PRESSURE WASHING WITH CLEAN WATER AT A MINIMUM OF 3000 PSI USING A FAN NOZZLE PERPENDICULAR TO AND AT A DISTANCE OF 12"-24" FROM THE CONCRETE SURFACE. THE COMPLETED SURFACE SHALL BE FREE OF BLEMISHES, DISCOLORATION AND UNNATURAL FORM MARKS. SANDBLASTING IS PROHIBITED. ETCHING IS NOT REQUIRED. IF THE CONCRETE SURFACE BECOMES SOILED AFTER ITS INITIAL CLEANING AND PRIOR TO RECEIVING STAIN, OR IF THE COLOR STAIN SYSTEM HAS NOT BEEN APPLIED TO THE CONCRETE SURFACE WITHIN 14 DAYS AFTER ITS INITIAL CLEANING, THE CONCRETE SURFACE SHALL AGAIN BE CLEANED TO THE ENGINEER'S SATISFACTION PRIOR TO APPLYING THE STAIN.

THE COLOR STAIN SYSTEM AND CLEAR SEALER SHALL BE APPLIED PER THE MANUFACTURER'S SPECIFICATIONS FOR EACH PRODUCT. APPLY THE PRODUCTS IN DRY WEATHER CONDITIONS WHEN THE AMBIENT AIR TEMPERATURE IS BETWEEN 50°F AND 90°F. SHOULD WEATHER CONDITIONS DIFFER FROM THESE REQUIREMENTS OR FROM THE MANUFACTURER'S SPECIFICATIONS, CONSULT THE MANUFACTURER FOR PROPER APPLICATION RECOMMENDATIONS.

USE THE COLORS AND APPLICATION TECHNIQUES AS APPROVED FOR THE FINAL MOCKUP. THE DESIRED FINISH COLOR EFFECT SHALL BE ACHIEVED BY APPLYING ONE COLOR, ONE COLOR OVER ANOTHER OR BY INTER-MIXING SEVERAL COLORS OF STAIN, AS PER MANUFACTURER'S SPECIFICATIONS. GROUT PATTERN JOINTS SHALL DISPLAY A UNIFORM COLOR AND APPEARANCE OF MORTARED JOINTS.

TEMPORARILY COVER THE COMPLETED WORK WHERE EXPOSED SOIL OR PAVEMENT MAY SPLATTER DIRT OR SOIL FROM RAINFALL, OR WHERE THE SURFACES MAY RECEIVE OVERSPRAY FROM OTHER PROCESSES, UNTIL THE STAIN AND SEALER HAVE CURED.

PROVIDE THE ENGINEER WITH PRODUCT DATA SHEETS AND SAMPLES OF ALL COLOR STAINS AND THE CLEAR SEALER USED TO PRODUCE THE FINISHED COLOR EFFECT. ALL SAMPLES SHALL BE IN THEIR ORIGINAL CONTAINERS IF POSSIBLE.

E. PAYMENT

PAYMENT FOR ALL WORK DESCRIBED HEREIN, INCLUDING ANY ADDITIONAL CONCRETE NEEDED TO CREATE THE FORMLINED ARCHITECTURAL TREATMENT AND THAT DOES NOT CONTRIBUTE TO THE CORE DESIGN OF THE PARAPET, WALL, BARRIER, PIER STEMS ETC. TO WHICH IT IS APPLIED, SHALL BE MADE PER THE SQUARE FOOT UNIT PRICE BID FOR ITEM 511 - CONCRETE, MISC.: ARCHITECTURAL TREATMENT.

ITEM 512 - SEALING OF CONCRETE SURFACES (NON EPOXY)

THIS ITEM OF WORK SHALL BE USED TO SEAL SIDEWALKS. PAYMENT SHALL BE MADE AT THE CONTRACT PRICE BID FOR ITEM 512 - SEALING OF CONCRETE SURFACES (NON-EPOXY). THIS PRICE AND PAYMENT SHALL INCLUDE ALL LABOR, MATERIALS, EQUIPMENT, AND INCIDENTALS NECESSARY TO COMPLETE THE WORK TO THE SATISFACTION OF THE ENGINEER.

P:\PR57030\Cadd\Sheets\ORR_91563_0042_SN003.dwg 13-Sep-21 11:25 AM

DESIGN AGENCY
BURGESS & NIPLE
100 WEST ERIE STREET
PAINESVILLE, OHIO 44077

DESIGNED	DRAWN	REVIEWED	DATE
BCS	BCS	DWL	09/2021
CHECKED	REVISED	STRUCTURE FILE NUMBER	
MAB		1876083	

STRUCTURE NOTES 3 OF 4
BRIDGE 00.42
OVER CUYAHOGA RIVER

CUY - OLD ROCKSIDE ROAD

ITEM SPECIAL - SEALING: ELASTOMERIC PROTECTIVE AND DECORATIVE CONCRETE COATING

THIS ITEM SHALL CONFORM TO "ITEM SPECIAL - SEALING, ELASTOMERIC PROTECTIVE AND DECORATIVE COATING" AS CONTAINED IN "SECTION 400 PROPOSAL NOTES" OF THE CUYAHOGA COUNTY ENGINEER SPECIFICATION BOOKLET.

THE COLOR OF THE PROPOSED SEALER SHALL BE AS FOLLOWS:

BEIGE, FEDERAL STANDARD COLOR NO. 595-26555 FOR THE SIMULATED STONE PARAPET CAP, THE SIDE OF CONCRETE DECK FASCIA, THE UNDERSIDE OF DECK FROM THE OUTER EDGE TO THE EXTERIOR BEAM, WINGWALL TOPS, ABUTMENTS, DIAPHRAGMS, AND PIER CAPS.

THE CONTRACTOR SHALL TAKE ALL PRECAUTIONS NECESSARY TO PREVENT EPOXY-URETHANE SEALER, PAINT, OR OTHER MATERIAL USED TO CLEAN, SEAL, OR TREAT ANY BRIDGE STRUCTURE FROM ENTERING ANY STREAMS, WETLANDS OR OTHER WATERS OF THE UNITED STATES AND TAKE APPROPRIATE ACTIONS IN THE EVENT OF A RELEASE.

ITEM 517 - RAILING (CONCRETE PARAPET WITH TWIN STEEL TUBE RAILING), AS PER PLAN

CONCRETE SHALL BE ITEM 511 - CLASS QC2 CONCRETE WITH QC/QA, AS PER PLAN.

THE STRUCTURAL STEEL RAILINGS AND RAIL POSTS SHALL NOT BE GALVANIZED OR METALIZED. INSTEAD, A THREE-COAT PAINT SYSTEM CONSISTING OF AN INORGANIC ZINC PRIME COAT, AN EPOXY INTERMEDIATE COAT AND A URETHANE FINISH COAT AS PER CMS 514 SHALL BE APPLIED TO THESE STEEL ELEMENTS. THE COLOR OF THE URETHANE FINISH COAT SHALL BE BLACK, FEDERAL STANDARD COLOR NO. 27038, UNLESS DIRECTED OTHERWISE BY THE ENGINEER. ALL NUTS, BOLTS AND OTHER RAILING APPURTENANCES SHALL ALSO BE PAINTED TO MATCH THE FINAL COLOR OF THE STEEL RAILINGS AND POSTS.

IN ADDITION TO THE VOLUME OF CONCRETE REQUIRED PER ODOT STANDARD DRAWING BR-2-15 FOR CONSTRUCTION OF PARAPETS, ANY ADDITIONAL CONCRETE NEEDED TO CREATE THE FORMLINED ARCHITECTURAL TREATMENT SHALL BE INCLUDED WITH ITEM 511 - CONCRETE MISC.: ARCHITECTURAL TREATMENT FOR PAYMENT. ALL MATERIALS AND LABOR REQUIRED FOR THE APPLICATION OF THE FORMLINERS AND CONCRETE STAIN SHALL ALSO BE INCLUDED WITH ITEM 511 - CONCRETE MISC.: ARCHITECTURAL TREATMENT FOR PAYMENT.

ITEM 518 - POROUS BACKFILL WITH GEOTEXTILE FABRIC, AS PER PLAN

POROUS BACKFILL WITH GEOTEXTILE FABRIC, AS PER PLAN SHALL BE 2 FEET THICK AND EXTENDED UP TO 1 FOOT BELOW THE EMBANKMENT SURFACE AND LATERALLY TO THE ENDS OF THE WINGWALLS. TURN GEOTEXTILE FABRIC UP TO 6 INCHES AGAINST ABUTMENT OR WINGWALL.

MATERIAL FOR POROUS BACKFILL SHALL BE LIMITED TO STONE. USE OF SLAG, IN ANY FORM, IS NOT PERMITTED.

ITEM 526 - REINFORCED CONCRETE APPROACH SLABS (T = 15"), AS PER PLAN

CONCRETE SHALL BE ITEM 511 - CLASS QC2 CONCRETE WITH QC/QA, BRIDGE DECK, AS PER PLAN. THE COST OF THE SIDEWALKS ON THE APPROACH SLABS SHALL BE INCLUDED IN ITEMS 509 AND 511. THE COST OF THE RAILING ON THE APPROACH SLABS SHALL BE INCLUDED WITH ITEM 517 - RAILING (CONCRETE PARAPET WITH TWIN STEEL TUBE RAILING), AS PER PLAN.

ITEM SPECIAL - STRUCTURES: PROTECTION OF FACILITIES

THIS ITEM SHALL CONSIST OF FURNISHING ALL NECESSARY LABOR, MATERIALS, AND EQUIPMENT TO PROTECT EXISTING FACILITIES AS APPROVED AND DIRECTED BY THE ENGINEER DURING CONSTRUCTION.

THE CONTRACTOR IS REMINDED THAT ALL EXISTING COMPONENTS AND SYSTEMS ARE TO REMAIN IN USE DURING AND AFTER THIS PROJECT AND REQUIRE PROTECTION. THIS WORK INCLUDES, BUT IS NOT LIMITED TO:

1. FIBER OPTIC CABLES
2. CUYAHOGA VALLEY NATIONAL PARK PROPERTY
3. DRIVEWAY TO CVSR PARKING LOT AND THORNBURG STATION
4. ELECTRIC LINES AND POLES
5. GAS LINES
6. WATERLINES

IT IS THE CONTRACTOR'S RESPONSIBILITY TO PROTECT THESE SYSTEMS AND COMPONENTS FOR THE DURATION OF THE CONTRACT. THE CONTRACTOR IS DIRECTED TO SECTION 107 AND PARTICULARLY TO SECTION 107.12 OF THE CONSTRUCTION AND MATERIAL SPECIFICATIONS.

PAYMENT SHALL BE MADE AT THE LUMP SUM PRICE BID FOR ITEM SPECIAL - STRUCTURES: PROTECTION OF FACILITIES. THIS SHALL INCLUDE ALL NECESSARY TOOLS, LABOR, EQUIPMENT, AND MATERIALS NECESSARY TO SUCCESSFULLY PERFORM THIS ITEM OF WORK.

ITEM SPECIAL - STRUCTURES: PRECONSTRUCTION CONDITION SURVEY

BEFORE PILE DRIVING BEGINS, CONDUCT A CONDITION SURVEY OF ANY EXISTING BUILDING, STRUCTURE, OR UTILITY WITHIN 200 FEET OF THE PILE DRIVING WORK. THE PURPOSE OF THE SURVEY IS TO DOCUMENT THE CONDITION OF THE BUILDING, STRUCTURE, OR UTILITY PRIOR TO PILE DRIVING, SO THAT ANY CLAIMS OF DAMAGE CAUSED BY THE PILE DRIVING CAN BE VERIFIED.

RETAIN AN EXPERIENCED VIBRATION SPECIALIST TO PERFORM OR SUPERVISE THE CONDITION SURVEY. USE A VIBRATION SPECIALIST THAT MEETS THE REQUIREMENTS LISTED IN ITEM 208 - VIBRATION CONTROL AND MONITORING, AS PER PLAN.

RECORD THE CONDITION OF EXISTING STRUCTURES AND BUILDING MATERIALS USING WRITTEN TEXT, PHOTOGRAPHS, AND VIDEO RECORDINGS. INSPECT INTERIOR WALLS, CEILINGS, AND FLOORS THAT ARE ACCESSIBLE. INSPECT THE EXTERIOR OF THE BUILDING THAT IS VISIBLE FROM GROUND LEVEL. ALSO RECORD THE LOCATION, SIZE, AND TYPE OF ALL CRACKS AND OTHER STRUCTURAL DEFICIENCIES.

IF OWNERS OR OCCUPANTS FAIL TO ALLOW ACCESS TO THE PROPERTY FOR THE PRECONSTRUCTION CONDITION SURVEY, SEND A CERTIFIED LETTER TO THE OWNER OR OCCUPANT. DOCUMENT THE NOTIFICATION EFFORT AND THE CERTIFIED LETTER IN THE REPORT.

SUBMIT A REPORT TO THE ENGINEER THAT SUMMARIZES THE PRECONSTRUCTION CONDITION OF THE BUILDINGS, STRUCTURES, AND UTILITIES, AND THAT IDENTIFIES AREAS OF CONCERN. SUBMIT THREE COPIES OF THE REPORT.

THE COUNTY WILL PAY FOR THIS ITEM AT THE CONTRACT LUMP SUM PRICE FOR ITEM SPECIAL - STRUCTURES: PRECONSTRUCTION CONDITION SURVEY.

ITEM 601 - ARTICULATING CONCRETE BLOCK REVETMENT SYSTEM, TYPE 3, AS PER PLAN

DESIGN THE ARTICULATED CONCRETE BLOCK REVETMENT SYSTEM PER THE HYDRAULIC STABILITY METHOD IN THE NCMA DESIGN MANUAL FOR ACB REVETMENT SYSTEMS WITH A MINIMUM SAFETY FACTOR OF 2.0 AND A DESIGN VOLUMETRIC FLOW OF 8 CUBIC FEET PER SECOND. PROVIDE DOCUMENTS TO SUPPLEMENT THE PLAN DETAILS TO PREPARE THE RIVERBANKS AND FURNISH AND INSTALL ARTICULATED CONCRETE BLOCK (ACB) MATS ON A GEOTEXTILE FABRIC IN ACCORDANCE WITH THE MANUFACTURER'S REQUIREMENTS AND RECOMMENDATIONS, THESE SPECIFICATIONS AND THE SLOPE PROTECTION DETAIL PLAN SHEETS. INCLUDE THE COSTS OF PREPARING AND SHAPING THE CHANNEL BANKS IN THIS ITEM. PROVIDE A WOVEN MONOFILAMENT OR NON-WOVEN GEOTEXTILE FABRIC WITH A PERCENT OPEN AREA (POA) GREATER THAN 4% AND A PERMEABILITY GREATER THAN THE UNDERLYING MATERIAL. MAINTAIN A MAXIMUM PROTRUSION HEIGHT FOR THE BLOCKS OF ONE-HALF INCH OR LESS. THE UN-TAPERED CONCRETE BLOCKS SHALL BE CLOSED CELL SINCE THERE WILL BE NO VEGETATION GROWING IN THE SURROUNDING TYPE A ROCK CHANNEL PROTECTION OR UNDER THE BRIDGE. CONCRETE FOR JOINTS AND BACKFILL SHALL BE 4,000 PSI CONFORMING TO ITEM 511-CLASS QC1 CONCRETE WITH QC/QA, FOOTING, AS PER PLAN. CABLES MAY BE EITHER POLYESTER OR GALVANIZED STEEL. BACKFILL THE OPEN AREAS OF THE ACB SYSTEM WITH NO. 6 UNIFORM CRUSHED STONE PER C&MS 703.01. PAY FOR THE DESIGN DOCUMENTS, ARTICULATED CONCRETE BLOCKS, CABLES, CONCRETE, GEOTEXTILE FABRIC (INCLUDING GEOTEXTILE FABRIC UNDERNEATH FILL CONCRETE AND ROCK CHANNEL PROTECTION), CRUSHED STONE AND ALL OTHER MATERIAL, LABOR AND EQUIPMENT REQUIRED TO COMPLETE THE ACB INSTALLATION ACCORDING TO THESE PLANS, THE CONTRACTOR'S DESIGN DOCUMENTS AND THE MANUFACTURER'S REQUIREMENTS AT THE UNIT PRICE BID PER SQUARE YARD FOR ITEM 601 - ARTICULATED CONCRETE BLOCK REVETMENT SYSTEM, TYPE 3, AS PER PLAN.

ITEM 601 - ROCK CHANNEL PROTECTION, TYPE A WITHOUT FILTER, AS PER PLAN

USE ROCK CHANNEL PROTECTION (RCP) ITEM TO ARMOR AND ANCHOR THE ARTICULATING CONCRETE BLOCK (ACB) REVETMENT SYSTEM IN THE FLANK TERMINATIONS AS WELL AS THE TOE TERMINATION TRENCHES IN THE RIVER BOTTOM DOWN TO THE ELEVATIONS AS SHOWN ON THE SLOPE PROTECTION DETAIL PLAN SHEETS. PAY FOR FURNISHING AND PLACING THE ROCK CHANNEL PROTECTION AS DETAILED IN THE PLANS AT THE UNIT PRICE BID PER CUBIC YARD FOR TIME 601 - ROCK CHANNEL PROTECTION, TYPE A WITHOUT FILTER, AS PER PLAN.

ITEM SPECIAL - CONTRACTOR ACCESS

ANY TEMPORARY ACCESS FILL WITHIN "WATERS OF THE U.S." (EG., STREAMS AND WETLANDS) SUBJECT TO THE U.S. ARMY CORPS OF ENGINEERS (USACE) REGULATORY JURISDICTION WILL REQUIRE AUTHORIZATION BY THE USACE PRIOR TO THE PLACEMENT OF TEMPORARY FILL VIA THE WATERWAY PERMITTING PROCESS (404/401). ALL TEMPORARY CONSTRUCTION ACCESS FILL SHALL BE CONSTRUCTED IN ACCORDANCE WITH THE APPLICABLE WATERWAY PERMITS AND SHALL NOT EXCEED THE QUANTITIES AND/OR SURFACE AREA OF TEMPORARY FILL THAT HAS BEEN PERMITTED. ALL TEMPORARY CONSTRUCTION ACCESS SHALL BE CONSTRUCTED WITHIN THE EXISTING AND PROPOSED TEMPORARY AND PERMANENT RIGHT OF WAY AS SHOWN IN THESE PLANS. THE WATERWAY PERMITS CAN BE REVIEWED AT THE CUYAHOGA COUNTY DEPARTMENT OF PUBLIC WORKS OFFICE OR AS INCLUDED IN THE BID PACKAGE SPECIAL PROVISIONS.

SEE SHEET 7/44 FOR MORE DETAILS.

PILES DRIVEN TO FULL ESTIMATED LENGTH WITH PILE/SOIL SETUP

THE ULTIMATE BEARING VALUE (UBV) IS 125 KIPS PER PILE FOR THE 12" CAST-IN-PLACE REINFORCED CONCRETE REAR AND FORWARD ABUTMENT PILES. THE ULTIMATE BEARING VALUE (UBV) IS 355 KIPS PER PILE FOR THE 14" CAST-IN-PLACE REINFORCED CONCRETE PIER 1 AND PIER 2 PILES. PART OF THE UBV WILL BE ACHIEVED THROUGH PILE/SOIL SETUP, WHICH IS A TIME DEPENDENT INCREASE IN RESISTANCE THAT OCCURS IN SOME SOILS.

NOTIFY THE ENGINEER AT LEAST 5 DAYS BEFORE DRIVING PILES SO THAT THE ENGINEER CAN NOTIFY THE DISTRICT GEOTECHNICAL ENGINEER, THE OFFICE OF CONSTRUCTION ADMINISTRATION, AND THE OFFICE OF GEOTECHNICAL ENGINEERING.

DRIVE THE FIRST TWO PILES AT THE REAR AND FORWARD ABUTMENT TO THE FULL ESTIMATED LENGTH OF 50 FEET AND 40 FEET RESPECTIVELY. DRIVE THE FIRST TWO PILES AT PIER 1 AND PIER 2 TO THE FULL ESTIMATED LENGTH OF 85 FEET AND 80 FEET RESPECTIVELY. PERFORM DYNAMIC LOAD TESTING ON BOTH PILES WHILE DRIVING. AFTER DRIVING AND TESTING THE FIRST TWO PILES, DRIVE THE REMAINING PILES IN THE SUBSTRUCTURE TO THE SAME DEPTH AS THE FIRST TWO PILES. AFTER DRIVING ALL PILES TO THE ESTIMATED LENGTH, CEASE ALL DRIVING OPERATIONS AT THE SUBSTRUCTURE FOR A PERIOD OF 14 DAYS. INCLUDE THE WAITING PERIOD AS A SEPARATE ACTIVITY IN THE PROGRESS SCHEDULE. AFTER THE WAITING PERIOD, PERFORM PILE RESTRIKES ON BOTH OF THE FIRST TWO PILES (ONE RESTRIKE ITEM).

SUBMIT ALL TEST RESULTS TO THE ENGINEER. IF THE RESTRIKE TEST RESULTS INDICATE THAT BOTH PILES ACHIEVED THE REQUIRED UBV, ALL PILES IN THE SUBSTRUCTURE MAY BE ACCEPTED BY THE ENGINEER.

IF THE RESTRIKE TEST RESULTS INDICATE THAT EITHER OF THE TWO PILES DID NOT ACHIEVE THE REQUIRED UBV, IMMEDIATELY NOTIFY THE ENGINEER SO THAT THE ENGINEER CAN NOTIFY THE DISTRICT GEOTECHNICAL ENGINEER, THE OFFICE OF CONSTRUCTION ADMINISTRATION, AND THE OFFICE OF GEOTECHNICAL ENGINEERING. THE ENGINEER WILL REVIEW THE TEST RESULTS AND ESTABLISH ADDITIONAL RESTRIKE TESTING OR DRIVING CRITERIA FOR THE PILING IN THE SUBSTRUCTURE WITH THE ASSISTANCE OF THE DISTRICT GEOTECHNICAL ENGINEER, THE OFFICE OF CONSTRUCTION ADMINISTRATION, AND THE OFFICE OF GEOTECHNICAL ENGINEERING.

IF DIRECTED BY THE ENGINEER, PERFORM ADDITIONAL RESTRIKE TESTING OR DRIVE ALL PILES IN THE SUBSTRUCTURE TO THE ESTABLISHED DRIVING CRITERIA. THE DEPARTMENT WILL PAY FOR SPLICING OF THE PILES BEYOND THE ESTIMATED LENGTH PROVIDED IN THE PLANS UNDER C&MS 109.05 WITH A NEGOTIATED PRICE PER SPLICE.

THIS PLAN NOTE INCLUDES A QUANTITY OF ONE EACH ITEM 523 DYNAMIC LOAD TESTING, AS PER PLAN AND A QUANTITY OF ONE EACH ITEM 523 RESTRIKE, AS PER PLAN PER EACH SUBSTRUCTURE UNIT.

P:\PR57030\Cadd\Sheets\ORR_91563_0042_SN004.dwg 13-Sep-21 11:25 AM

DESIGN AGENCY
BURGESS & NIPLE
100 WEST ERIE STREET
PAINESVILLE, OHIO 44077

DESIGNED	DRAWN	REVIEWED	DATE
BCS	BCS	DWL	09/2021
CHECKED	REVISED	STRUCTURE FILE NUMBER	
MAB		1876083	

STRUCTURE NOTES 4 OF 4
BRIDGE 00.42
OVER CUYAHOGA RIVER

CUY - OLD ROCKSIDE ROAD

ESTIMATED QUANTITIES

REF NO.	ITEM	ITEM EXT.	TOTAL	UNIT	DESCRIPTION	ABUTMENTS	PIERS	SUPER.	GENERAL	REF. SHEET
125	202	11003	LS	-	STRUCTURE REMOVED, OVER 20 FOOT SPAN, AS PER PLAN				LS	3/44
126	202	23500	348	SY	WEARING COURSE REMOVED				348	
127	208	14001	LS	-	VIBRATION CONTROL AND MONITORING, AS PER PLAN				LS	3/44
128	503	11100	LS	-	COFFERDAMS AND EXCAVATION BRACING				LS	
129	503	21301	LS	-	UNCLASSIFIED EXCAVATION, AS PER PLAN				LS	3/44
130	505	11100	LS	-	PILE DRIVING EQUIPMENT MOBILIZATION				LS	
131	507	00501	2230	FT	12" CAST-IN-PLACE REINFORCED CONCRETE PILES, DRIVEN, AS PER PLAN	2080			150	3/44
132	507	00551	2370	FT	12" CAST-IN-PLACE REINFORCED CONCRETE PILES, FURNISHED, AS PER PLAN	2220			150	3/44
133	507	00601	2790	FT	14" CAST-IN-PLACE REINFORCED CONCRETE PILES, DRIVEN, AS PER PLAN		2640		150	3/44
134	507	00651	2950	FT	14" CAST-IN-PLACE REINFORCED CONCRETE PILES, FURNISHED, AS PER PLAN		2800		150	3/44
135	507	92201	300	FT	PREBORED HOLES, AS PER PLAN				300	3/44
136	509	10001	132862	LB	EPOXY COATED REINFORCING STEEL, AS PER PLAN	11612	30882	90368		3/44
137	511	33500	2	EACH	SEMI-INTEGRAL DIAPHRAGM GUIDE			2		
138	511	34447	351	CY	CLASS QC2 CONCRETE WITH QC/QA, BRIDGE DECK, AS PER PLAN			351		4/44
139	511	40513	276	CY	CLASS QC1 CONCRETE WITH QC/QA, PIER ABOVE FOOTINGS, AS PER PLAN		276			4/44
140	511	43513	132	CY	CLASS QC1 CONCRETE WITH QC/QA, ABUTMENT INCLUDING FOOTINGS, AS PER PLAN	132				4/44
141	511	46513	104	CY	CLASS QC1 CONCRETE WITH QC/QA, FOOTING, AS PER PLAN		104			4/44
142	511	51513	69	CY	CLASS QC2 CONCRETE WITH QC/QA, SIDEWALK, AS PER PLAN				69	4/44
143	511	71200	6785	SF	CONCRETE, MISC.: ARCHITECTURAL TREATMENT	384	3414	2987		4/44
144	512	10050	233	SY	SEALING OF CONCRETE SURFACES (NON-EPOXY)				233	
145	512	33300	102	SY	TYPE A WATERPROOFING	102				
146	512	44400	15	SY	TYPE B WATERPROOFING	15				
147	SPECIAL	51275500	391	SY	SEALING: ELASTOMERIC PROTECTIVE AND DECORATIVE CONCRETE COATING	80	119	192		5/44
148	513	10000	LS	-	STRUCTURAL STEEL MEMBERS, LEVEL UF				LS	
149	513	10260	418100	LB	STRUCTURAL STEEL MEMBERS, LEVEL 3			418100		
150	513	20000	4230	EACH	WELDED STUD SHEAR CONNECTORS			4230		
151	514	00800	418100	LB	FIELD PAINTING STRUCTURAL STEEL, INTERMEDIATE COAT			418100		
152	514	00850	418100	LB	FIELD PAINTING STRUCTURAL STEEL, FINISH COAT			418100		
153	516	10010	78	FT	ARMORLESS PREFORMED JOINT SEAL				78	
154	516	13600	14	SF	1" PREFORMED EXPANSION JOINT FILLER				14	
155	516	13900	156	SF	2" PREFORMED EXPANSION JOINT FILLER				156	
156	516	14020	81	FT	SEMI-INTEGRAL ABUTMENT EXPANSION JOINT SEAL			81		
157	516	44101	12	EACH	ELASTOMERIC BEARING WITH INTERNAL LAMINATES AND LOAD PLATE (NEOPRENE) (BEARING - 1'-10" X 1'-6 1/2" X 2 13/16", LOAD PLATE - 1'-7 1/2" X 1'-11" X 1 13/16"), AS PER PLAN		12			25/44
158	516	44201	12	EACH	ELASTOMERIC BEARING WITH INTERNAL LAMINATES AND LOAD PLATE (NEOPRENE) (BEARING - 1'-2" X 1'-0" X 3 1/8", LOAD PLATE - 1'-3" X 1'-1" X 1 1/2"), AS PER PLAN	12				24/44
159	517	75121	582	FT	RAILING (CONCRETE PARAPET WITH TWIN STEEL TUBE RAILING), AS PER PLAN			582		5/44
160	518	21201	51	CY	POROUS BACKFILL WITH GEOTEXTILE FABRIC, AS PER PLAN	51				5/44
161	518	40000	104	FT	6" PERFORATED CORRUGATED PLASTIC PIPE	104				
162	518	40010	60	FT	6" NON-PERFORATED CORRUGATED PLASTIC PIPE, INCLUDING SPECIALS	60				
163	523	20001	4	EACH	DYNAMIC LOAD TESTING, AS PER PLAN				4	5/44
164	523	20501	4	EACH	RESTRIKE, AS PER PLAN				4	5/44
165	526	25001	223	SY	REINFORCED CONCRETE APPROACH SLABS (T=15"), AS PER PLAN				223	5/44
166	526	90030	78	FT	TYPE C INSTALLATION				78	
167	SPECIAL	53000200	LS	-	STRUCTURES: PROTECTION OF FACILITIES				LS	5/44
168	SPECIAL	53000200	LS	-	STRUCTURES: PRECONSTRUCTION CONDITION SURVEY				LS	5/44
169	SPECIAL	53000200	LS	-	STRUCTURES: PROPOSED GAS LINE PIPE SLEEVES *				LS *	27,29/44
170	601	20000	3	SY	CRUSHED AGGREGATE SLOPE PROTECTION				3	
171	601	23021	940	SY	ARTICULATING CONCRETE BLOCK REVETMENT SYSTEM, TYPE 3, AS PER PLAN				940	5/44
172	601	34001	305	CY	ROCK CHANNEL PROTECTION, TYPE A WITHOUT FILTER, AS PER PLAN				305	5/44
173	625	33000	1	EACH	STRUCTURE GROUNDING SYSTEM				1	
174	SPECIAL	69098400	LS	-	CONTRACTOR ACCESS				LS	5,7/44
175	SPECIAL	69098400	LS	-	WORK INVOLVING ASBESTOS CONTAINING MATERIALS				LS	3/44

LEGEND:

* = ITEM TO BE PAID FOR WITH 100% LOCAL FUNDING

NOTES:

1. ITEM 513 STRUCTURAL STEEL MEMBER LEVEL 3, ITEM 514 FIELD PAINTING STRUCTURAL STEEL INTERMEDIATE COAT, AND ITEM 514 FIELD PAINTING STRUCTURAL STEEL FINISH COAT: THESE TOTAL WEIGHTS ARE BASED ON THE USE OF TYPE A CROSSFRAMES. PROVIDE THE UNIT COST OF STRUCTURAL STEEL AND PAINTING USING THE TOTAL WEIGHT SHOWN IN THE PLANS, REGARDLESS OF ANY CHANGE TO THE TOTAL WEIGHT RESULTING FROM THE SELECTION OF TYPE B CROSSFRAMES IN LIEU OF TYPE A.

DESIGN AGENCY
BURGESS & NIPLE
100 WEST ERIE STREET
PAINESVILLE, OHIO 44077

DESIGNED BCS | DRAWN BCS | REVIEWED DWL | DATE 09/2021 | CHECKED MAB | REVISED | STRUCTURE FILE NUMBER 1876083

ESTIMATED QUANTITIES
BRIDGE 00.42
OVER CUYAHOGA RIVER

CUY - OLD
ROCKSIDE ROAD

P:\PR57030\Cadd\Sheets\ORR_91563_0042_SQ001.dwg 13-Sep-21 11:25 AM

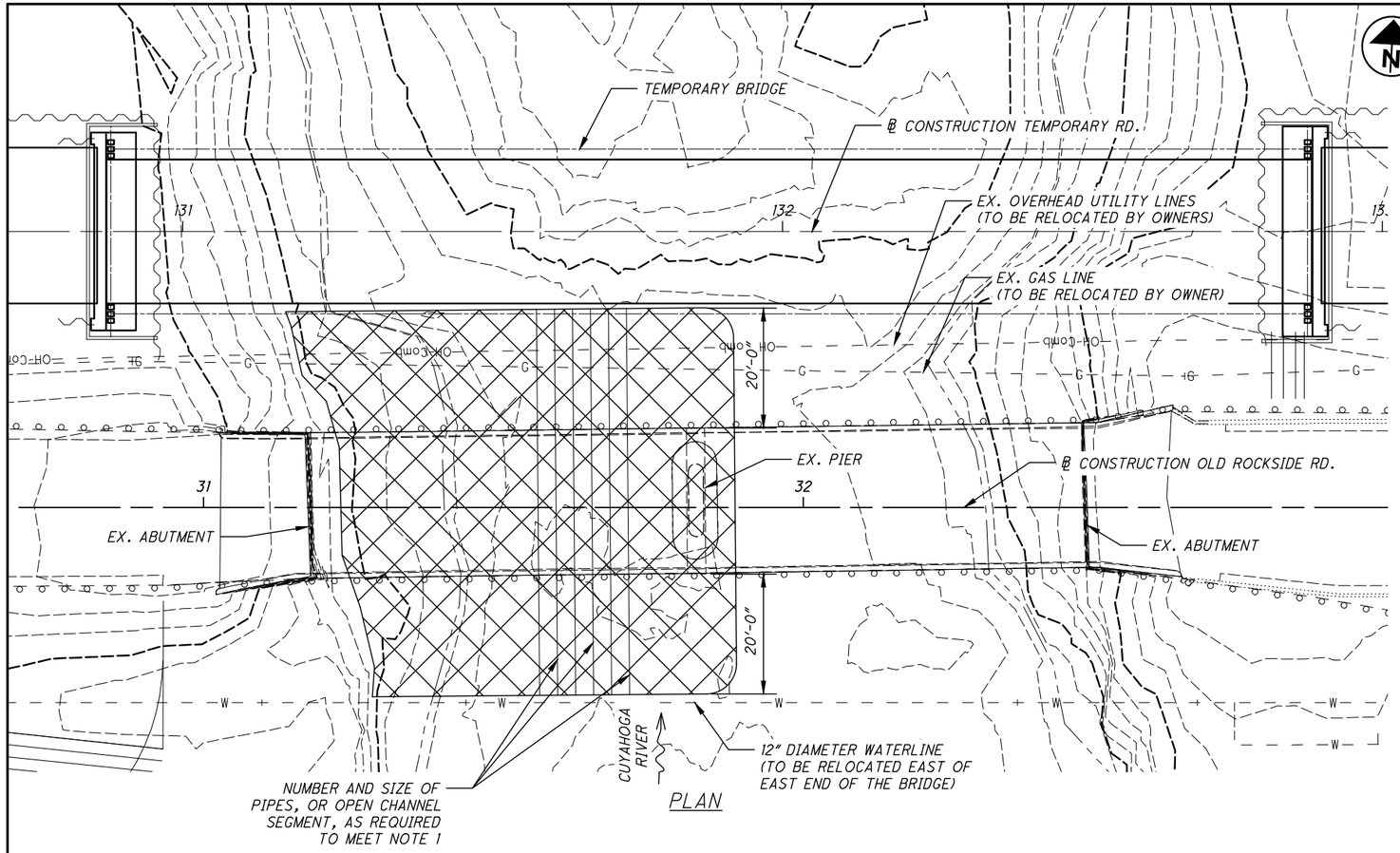

PLAN

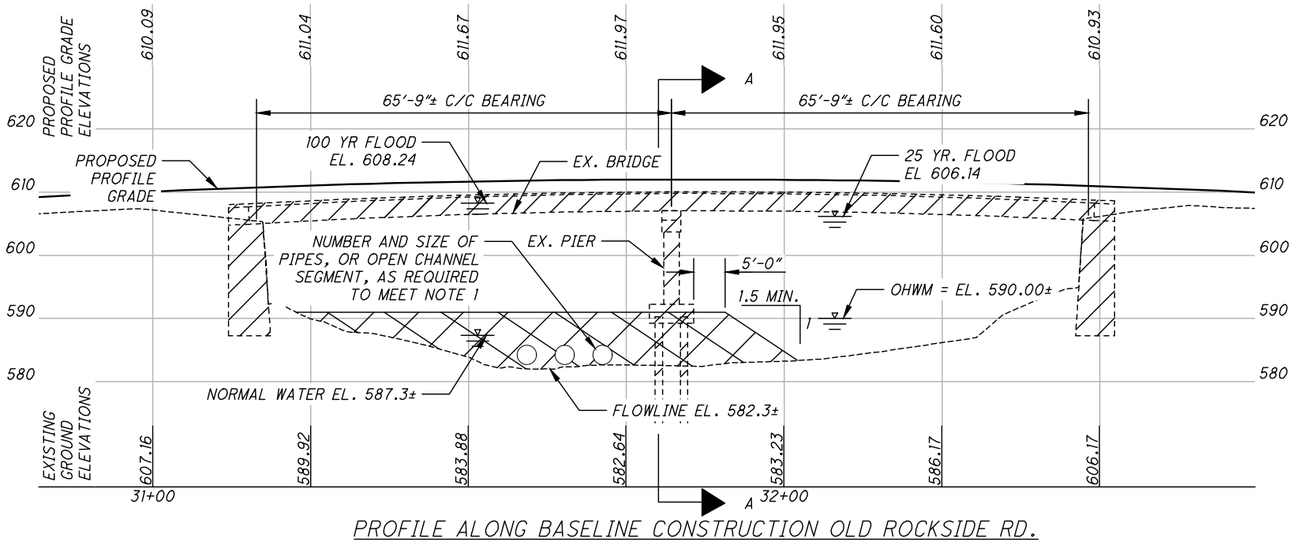

PROFILE ALONG BASELINE CONSTRUCTION OLD ROCKSIDE RD.

PROPOSED WORK

A NEW BRIDGE WILL BE BUILT OVER THE CUYAHOGA RIVER. WITHIN THE LIMITS OF THE CUYAHOGA RIVER ORDINARY HIGH WATER MARK THERE WILL BE SUBSTRUCTURE REMOVAL WORK THAT WILL BE ACCOMPLISHED USING A CAUSEWAY IN THE RIVER. ONCE THE EXISTING PIER REMOVAL WORK IS COMPLETE, THE CAUSEWAY WILL BE IMMEDIATELY REMOVED. MAXIMUM DURATION OF THE CAUSEWAY CONSTRUCTION, PRESENCE, AND REMOVAL WILL BE SIX WEEKS. THIS SIX WEEK TIMEFRAME IS CONTINUOUS. SEE CONTRACTOR ACCESS NOTE ON SHEET 5/44 FOR MORE DETAILS.

IMPACT TOTALS

LENGTH OF CHANNEL DISTURBED = 64 FEET

PLAN AREA OF TEMPORARY ACCESS FILL = 0.10 ACRES

FILL BELOW ORDINARY HIGH WATER MARK = 1,240 CY

TOTAL FILL REQUIRED = 1,430 CY

NOTES:

1. THE TEMPORARY ACCESS FILL SHALL BE DESIGNED TO MAINTAIN A FLOW EQUAL TO TWO TIMES THE HIGHEST AVERAGE MONTHLY FLOW (I.E. THE LARGEST OF Q1, Q2, Q3, ... Q12), AS REPORTED BY THE USGS WEB BASED APPLICATION STREAM STATS (SEE BDM SECTION 201.3.2) SUCH THAT NO RISE IN THE BACKWATER ABOVE THE OHWM IS PERMITTED. SEE ITEM SPECIAL - CONTRACTOR ACCESS NOTE ON SHEET 5/44 FOR MORE DETAILS.
2. ALMOST EVERY YEAR THE CUYAHOGA RIVER REACHES AN ELEVATION OF 600.00 WHICH CORRESPONDS TO A DISCHARGE OF APPROXIMATELY 10,000 CFS.
3. ITEM SPECIAL - CONTRACTOR ACCESS SHALL INCLUDE ALL NECESSARY EARTHWORK AND TEMPORARY GRADING, LABOR, AND MATERIALS TO CONSTRUCT AND REMOVE THE TEMPORARY ACCESS FILL AND PIPING.

LEGEND:

= TEMPORARY ACCESS FILL

= ITEM 202 - STRUCTURE REMOVED, OVER 20 FOOT SPAN, AS PER PLAN

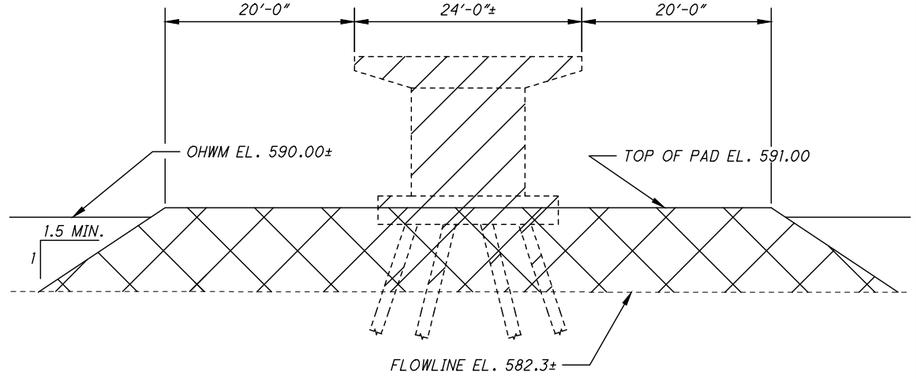

SECTION A-A

DESIGN AGENCY
BURGESS & NIPLE
100 WEST ERIE STREET
PAINESVILLE, OHIO 44077

DESIGNED	DRAWN	REVIEWED	DATE
BCS	BCS	DWL	09/2021
CHECKED	REVISED	STRUCTURE FILE NUMBER	
MAB		1876083	

TEMPORARY ACCESS FILL
BRIDGE 00.42
OVER CUYAHOGA RIVER

CUY - OLD
ROCKSIDE ROAD

7 / 44

105
157

P:\PR57030\Cadd\Sheets\ORR_91563_0042_SM008.dwg 13-Sep-21 11:26 AM

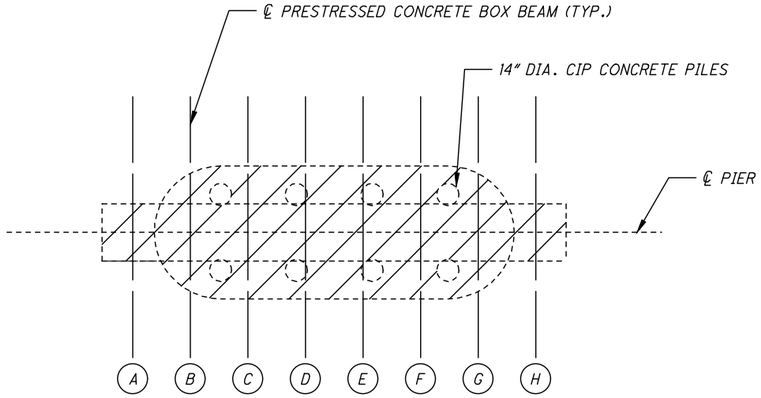

PLAN

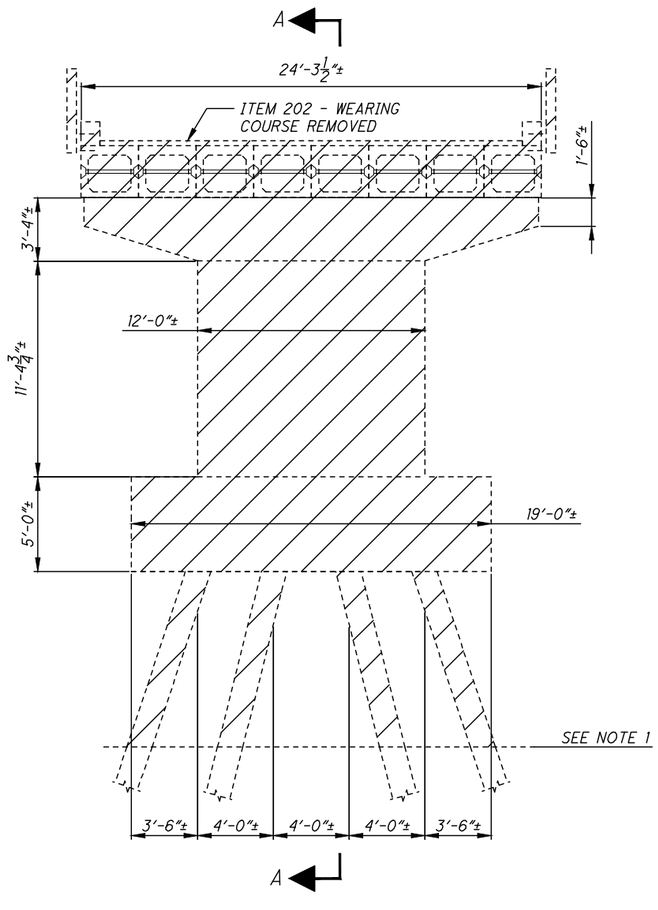

ELEVATION

NOTES:

1. REMOVE PIER AND PILES TO RIVER BOTTOM.

LEGEND:

= ITEM 202 - STRUCTURE REMOVED, OVER 20 FOOT SPAN, AS PER PLAN

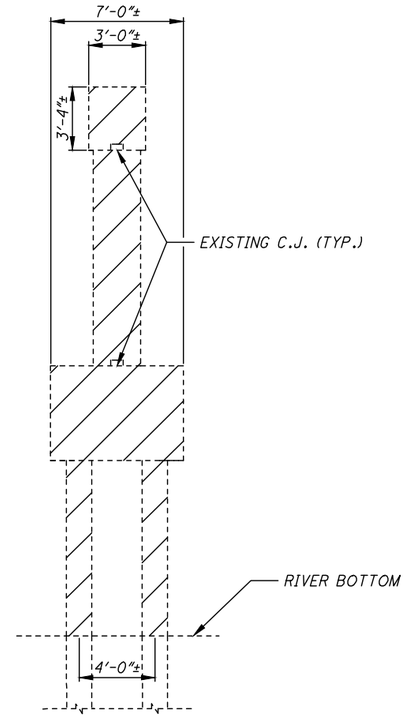

SECTION A-A

P:\PR57030\Cadd\Sheets\ORR_91563_0042_SV001.dwg 13-Sep-21 11:26 AM

DESIGN AGENCY
BURGESS & NIPLE
100 WEST ERIE STREET
PAINESVILLE, OHIO 44077

DESIGNED	DRAWN	REVIEWED	DATE
WTB	WTB	DWL	09/2021
CHECKED	REVISED	STRUCTURE FILE NUMBER	
GJL		1876083	

REMOVAL DETAILS
BRIDGE 00.42
OVER CUYAHOGA RIVER

CUY - OLD
ROCKSIDE ROAD

8 / 44

106
157

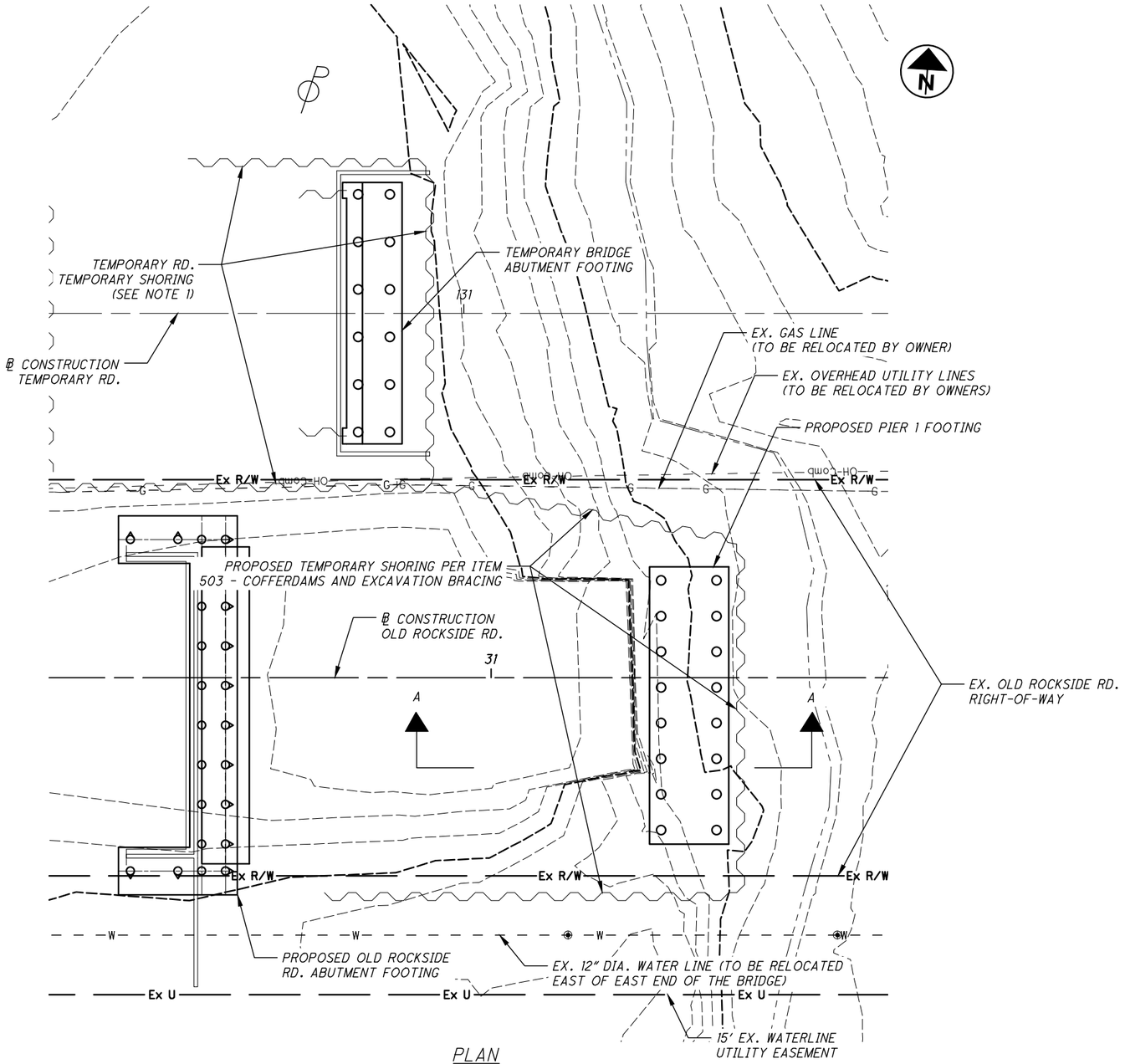

PLAN

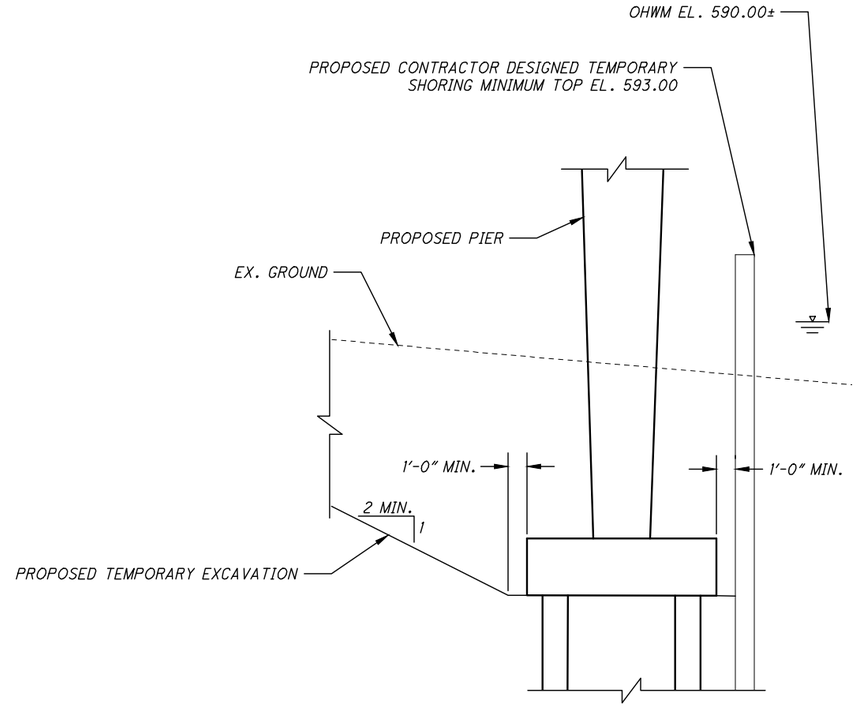

SECTION A-A

NOTES:

1. SEE TEMPORARY BRIDGE SHEET 7/18 FOR TEMPORARY SHORING DETAILS.

P:\PR57030\Cadd\Sheets\ORR_91563_0042_SH001.dwg 13-Sep-21 11:27 AM

DESIGN AGENCY
BURGESS & NIPLE
100 WEST ERIE STREET
PAINESVILLE, OHIO 44077

DESIGNED	DRAWN	REVIEWED	DATE
BCS	BCS	DWL	09/2021
CHECKED	REVISED	STRUCTURE FILE NUMBER	
MAB		1876083	

PIER 1 TEMPORARY SHORING
BRIDGE 00.42
OVER CUYAHOGA RIVER

CUY - OLD
ROCKSIDE ROAD

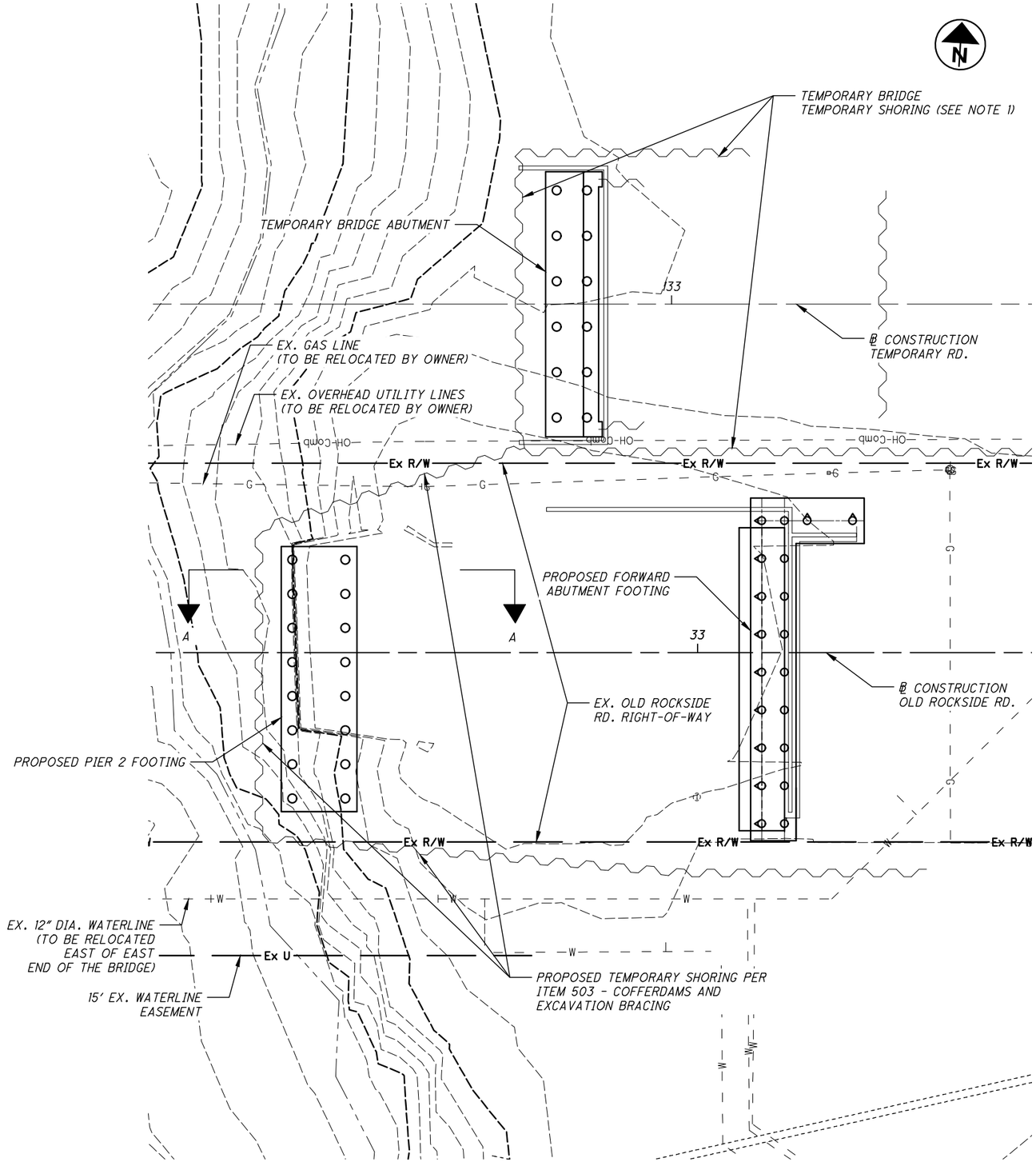

NOTES:

1. SEE TEMPORARY BRIDGE SHEET 7/18 FOR TEMPORARY SHORING DETAILS.
2. SEE SHEET 9/44 FOR SECTION A-A.

DESIGN AGENCY
BURGESS & NIPLE
100 WEST ERIE STREET
PAINESVILLE, OHIO 44077

DESIGNED	DRAWN	REVIEWED	DATE
BCS	BCS	DWL	09/2021
CHECKED	REVISED	STRUCTURE FILE NUMBER	
MAB		1876083	

PIER 2 TEMPORARY SHORING
BRIDGE 00.42
OVER CUYAHOGA RIVER

CUY - OLD ROCKSIDE ROAD

P:\PR57030\Cadd\Sheets\ORR_91563_0042_SH002.dwg 13-Sep-21 11:28 AM

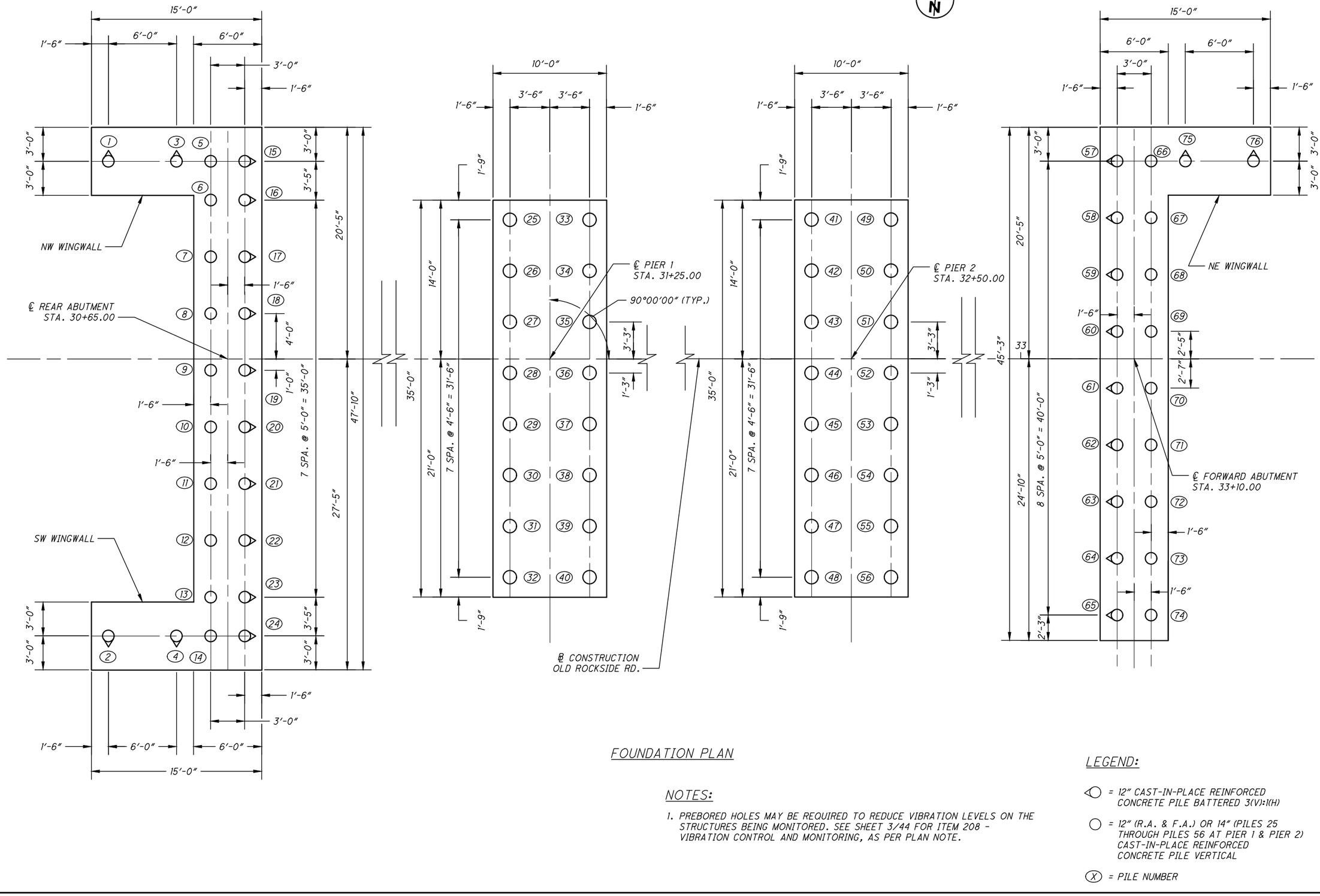

FOUNDATION PLAN

NOTES:

1. PREBORED HOLES MAY BE REQUIRED TO REDUCE VIBRATION LEVELS ON THE STRUCTURES BEING MONITORED. SEE SHEET 3/44 FOR ITEM 208 - VIBRATION CONTROL AND MONITORING, AS PER PLAN NOTE.

LEGEND:

- ◁ = 12" CAST-IN-PLACE REINFORCED CONCRETE PILE BATTERED 3(V):1(H)
- ○ = 12" (R.A. & F.A.) OR 14" (PILES 25 THROUGH PILES 56 AT PIER 1 & PIER 2) CAST-IN-PLACE REINFORCED CONCRETE PILE VERTICAL
- (X) = PILE NUMBER

DESIGN AGENCY
BURGESS & NIPLE
100 WEST ERIE STREET
PAINESVILLE, OHIO 44077

DESIGNED	DRAWN	REVIEWED	DATE
BCS/GJL	WTB	DWL	09/2021
CHECKED	REVISED	STRUCTURE FILE NUMBER	
MAB		1876083	

FOUNDATION PLAN
BRIDGE 00.42
OVER CUYAHOGA RIVER

CUY - OLD ROCKSIDE ROAD

11 / 44

109 / 157

P:\PR57030\Cadd\Sheets\ORR_91563_0042_S0001.dwg 13-Sep-21 11:28 AM

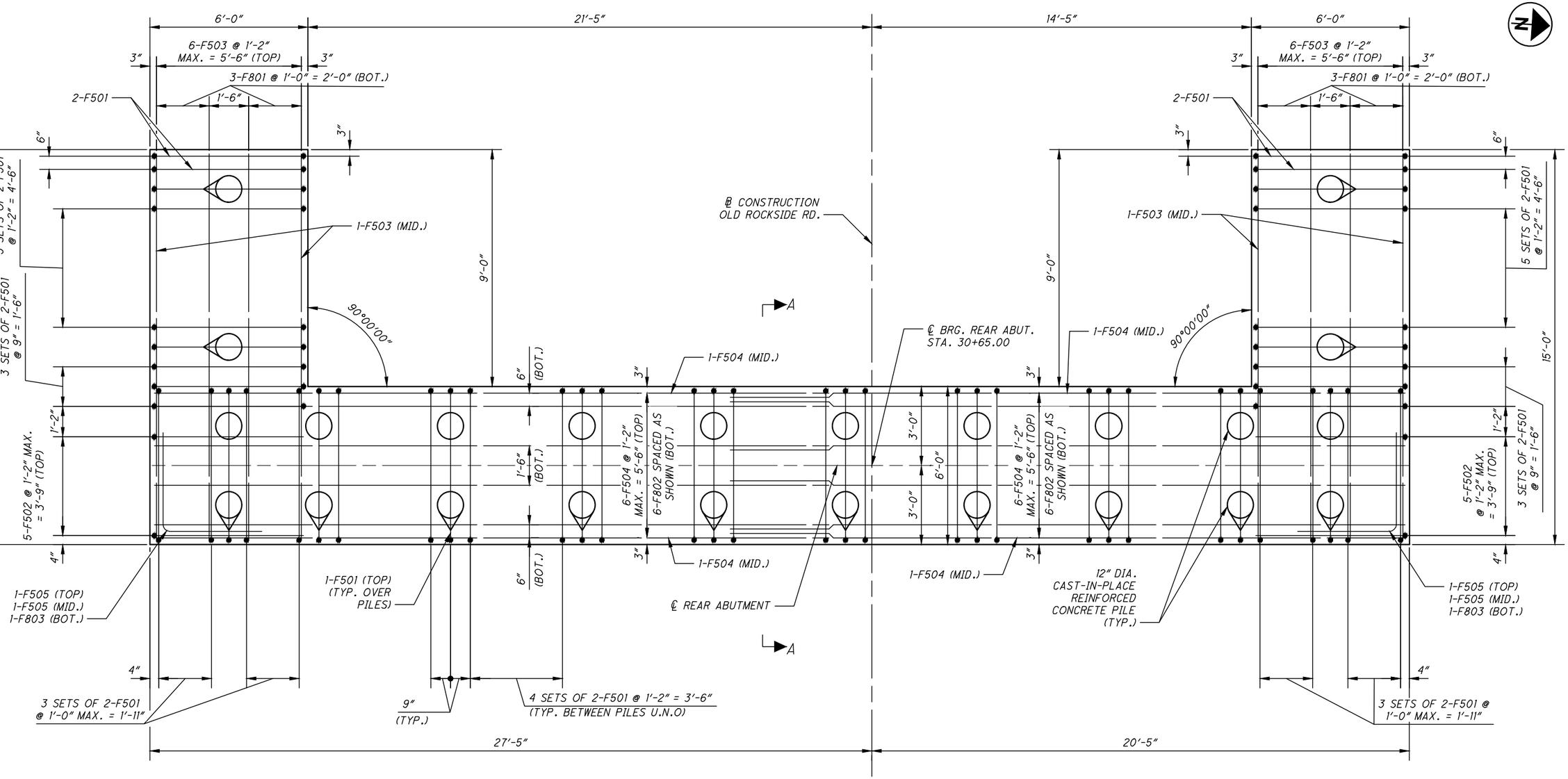

REAR ABUTMENT FOOTING PLAN

NOTES:

1. SEE SHEET 11/44 FOR PILE LAYOUT.
2. SEE SHEET 13/44 FOR REAR ABUTMENT PLAN AND ELEVATION.
3. SEE ODOT STD. BRIDGE DWG. SICD-1-96 FOR ADDITIONAL NOTES AND DETAILS.
4. MINIMUM LAP LENGTHS:
   #5 BAR = 3'-1"
   #8 BAR = 3'-9"
5. SEE SHEET 17/44 FOR SECTION A-A.

DESIGN AGENCY
BURGESS & NIPLE
100 WEST ERIE STREET
PAINESVILLE, OHIO 44077

DESIGNED	DRAWN	REVIEWED	DATE
BCS	BCS	DWL	09/2021
CHECKED	REVISED	STRUCTURE FILE NUMBER	
SJA/MAB		1876083	

REAR ABUTMENT FOOTING PLAN
BRIDGE 00.42
OVER CUYAHOGA RIVER

CUY - OLD ROCKSIDE ROAD

12 / 44

110
157

P:\PR57030\Cadd\Sheets\ORR_91563_0042_SR002.dwg 13-Sep-21 11:28 AM

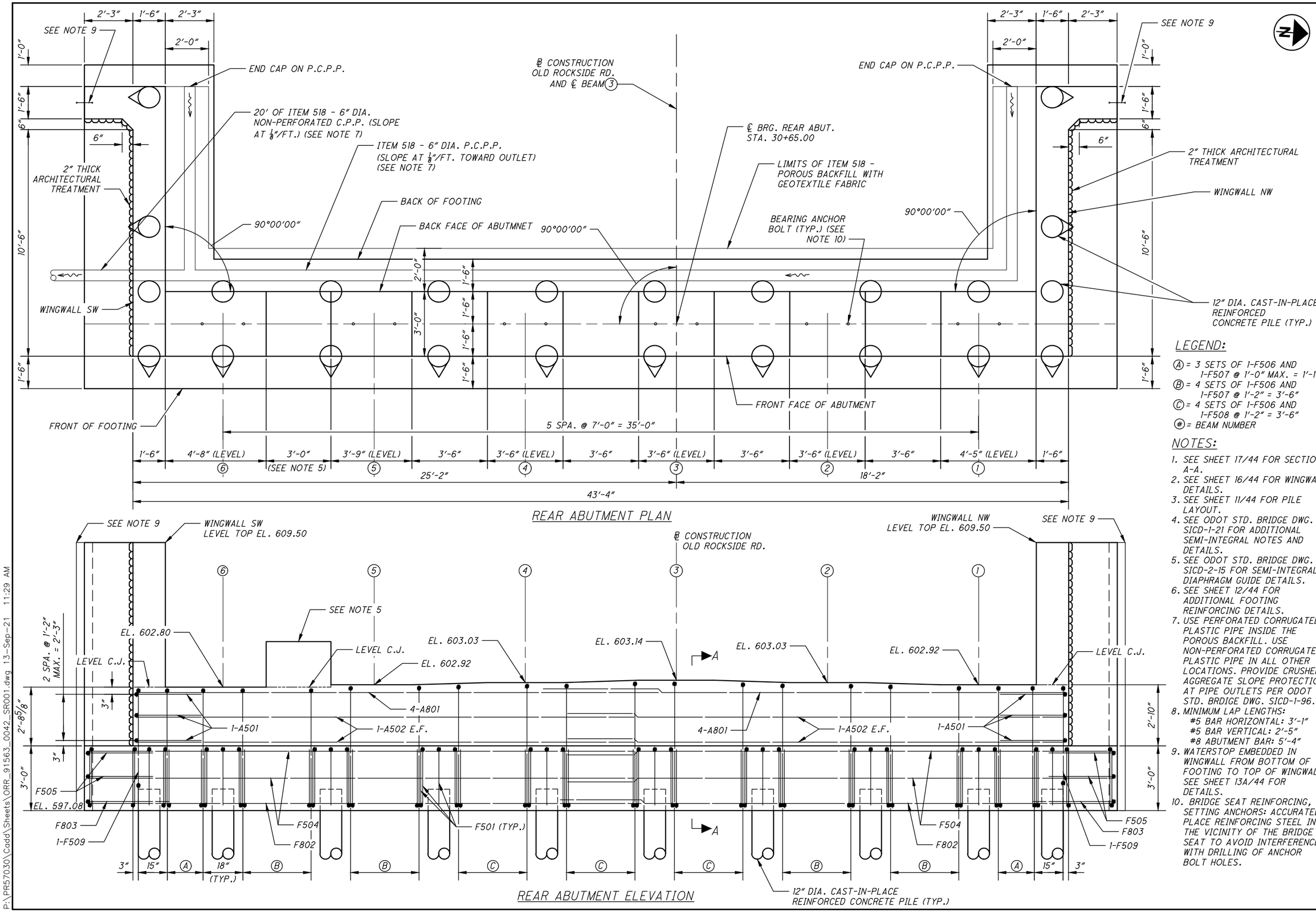

LEGEND:

Ⓐ = 3 SETS OF 1-F506 AND 1-F507 @ 1'-0" MAX. = 1'-11"
Ⓑ = 4 SETS OF 1-F506 AND 1-F507 @ 1'-2" = 3'-6"
Ⓒ = 4 SETS OF 1-F506 AND 1-F508 @ 1'-2" = 3'-6"
(#) = BEAM NUMBER

NOTES:

1. SEE SHEET 17/44 FOR SECTION A-A.
2. SEE SHEET 16/44 FOR WINGWALL DETAILS.
3. SEE SHEET 11/44 FOR PILE LAYOUT.
4. SEE ODOT STD. BRIDGE DWG. SICD-1-21 FOR ADDITIONAL SEMI-INTEGRAL NOTES AND DETAILS.
5. SEE ODOT STD. BRIDGE DWG. SICD-2-15 FOR SEMI-INTEGRAL DIAPHRAGM GUIDE DETAILS.
6. SEE SHEET 12/44 FOR ADDITIONAL FOOTING REINFORCING DETAILS.
7. USE PERFORATED CORRUGATED PLASTIC PIPE INSIDE THE POROUS BACKFILL. USE NON-PERFORATED CORRUGATED PLASTIC PIPE IN ALL OTHER LOCATIONS. PROVIDE CRUSHED AGGREGATE SLOPE PROTECTION AT PIPE OUTLETS PER ODOT STD. BRDIGE DWG. SICD-1-96.
8. MINIMUM LAP LENGTHS:
   #5 BAR HORIZONTAL: 3'-1"
   #5 BAR VERTICAL: 2'-5"
   #8 ABUTMENT BAR: 5'-4"
9. WATERSTOP EMBEDDED IN WINGWALL FROM BOTTOM OF FOOTING TO TOP OF WINGWALL. SEE SHEET 13A/44 FOR DETAILS.
10. BRIDGE SEAT REINFORCING, SETTING ANCHORS: ACCURATELY PLACE REINFORCING STEEL IN THE VICINITY OF THE BRIDGE SEAT TO AVOID INTERFERENCE WITH DRILLING OF ANCHOR BOLT HOLES.

DESIGN AGENCY
BURGESS & NIPLE
100 WEST ERIE STREET
PAINESVILLE, OHIO 44077

DESIGNED	DRAWN	REVIEWED	DATE
BCS	BCS	DWL	09/2021
CHECKED	REVISED	STRUCTURE FILE NUMBER	
SJA/MAB		1876083	

REAR ABUTMENT PLAN AND ELEVATION
BRIDGE 00.42
OVER CUYAHOGA RIVER

CUY - OLD ROCKSIDE ROAD

13 / 44
111 / 157

P:\PR57030\Cadd\Sheets\ORR_91563_0042_SR001.dwg 13-Sep-21 11:29 AM

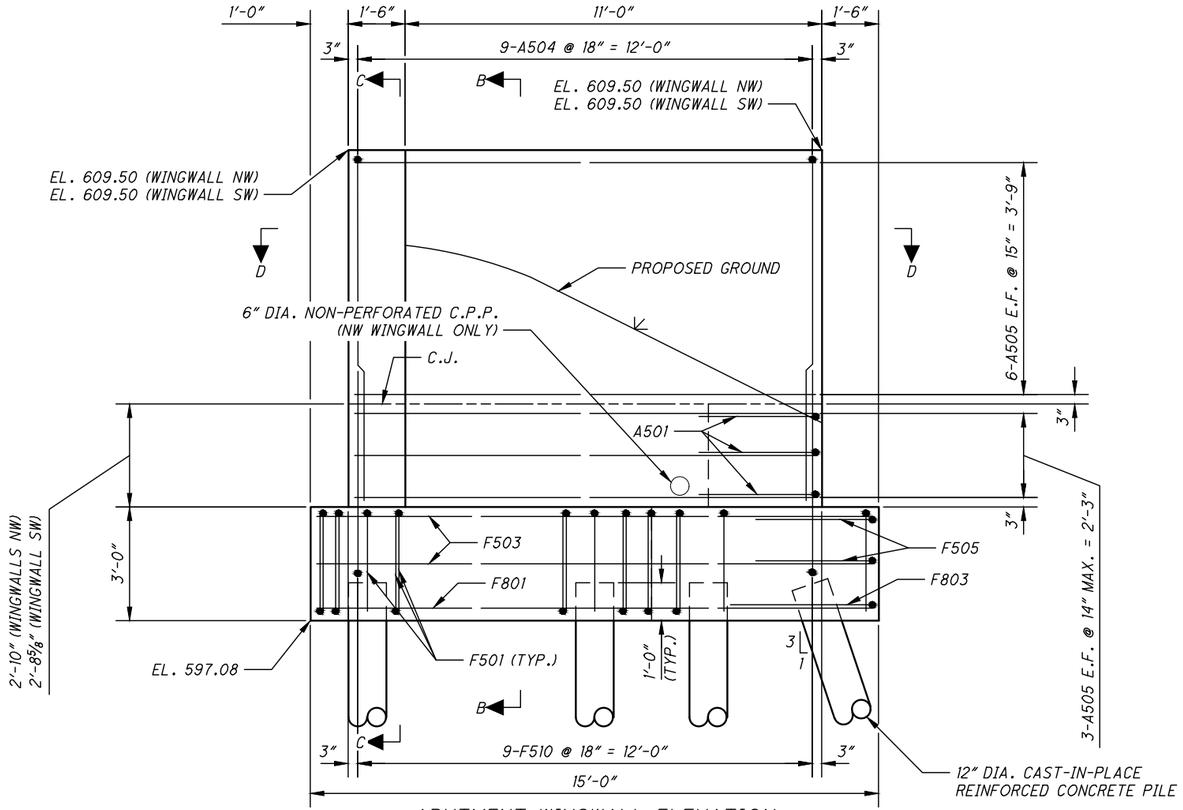

ABUTMENT WINGWALL ELEVATION
(SW WINGWALL SHOWN, NW WINGWALL OPPOSITE HAND)

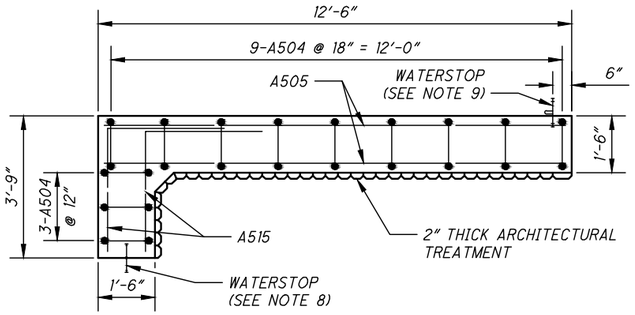

SECTION D-D

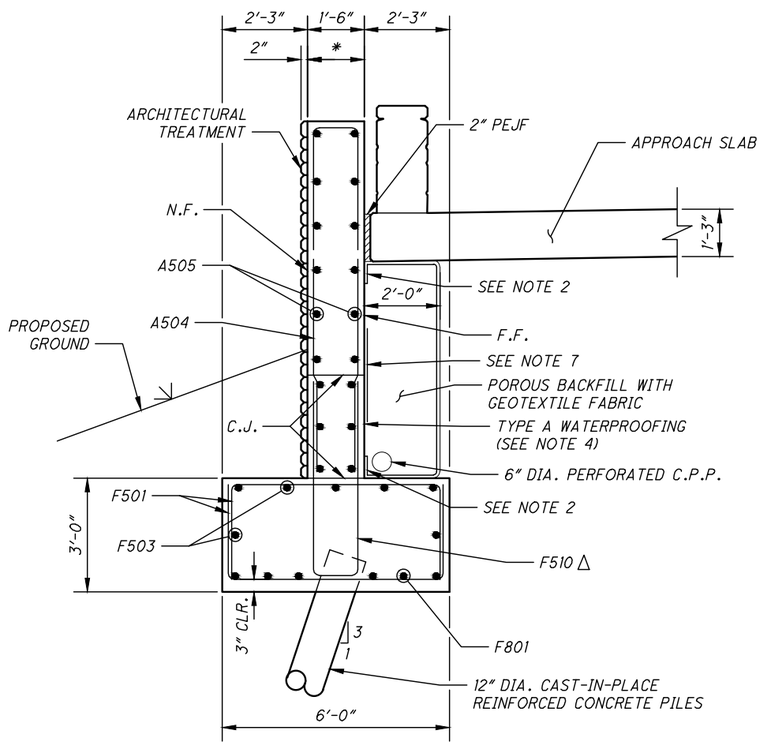

SECTION B-B

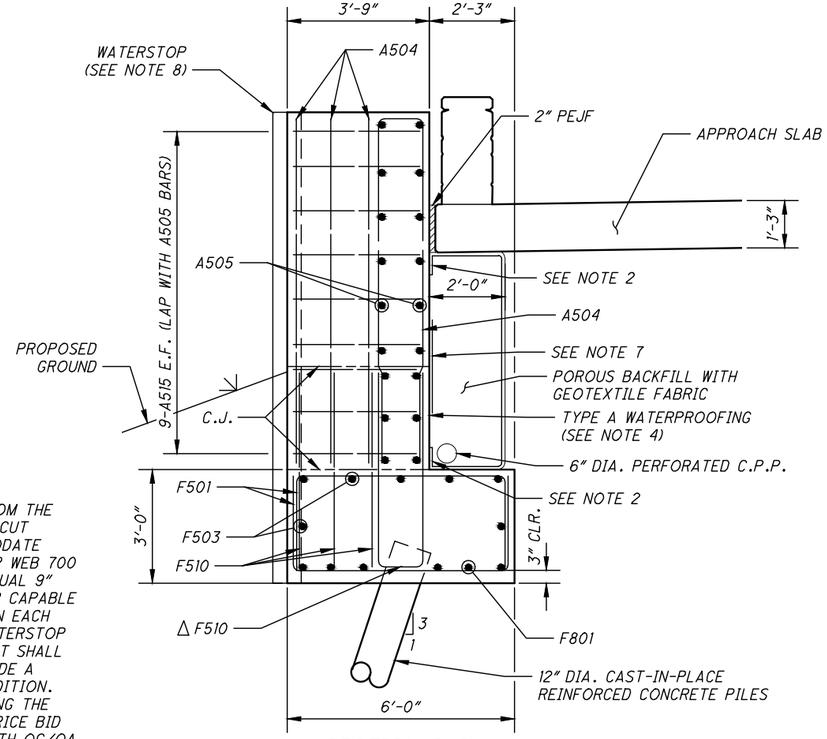

SECTION C-C

LEGEND:

Δ = ADJUST BAR UP AS NEEDED TO PROVIDE 2" MIN. CLEARANCE OVER TOP OF PILE

* = LIMITS OF SEALING CONCRETE SURFACES ITEM SPECIAL - SEALING MISC.: ELASTOMERIC PROTECTIVE AND DECORATIVE CONCRETE COATING

NOTES:

1. SEE SHEET 13/44 FOR ADDITIONAL NOTES.
2. TURN GEOTEXTILE FABRIC UP 6" AT BASE OF WALL AND DOWN 6" AT TOP OF WALL.
3. SEE SHEET 11/44 FOR PILE LAYOUT.
4. PROVIDE TYPE A WATERPROOFING FROM TOP OF FOOTING TO BOTTOM OF 2" PEJF.
5. MINIMUM LAP LENGTHS:
   #5 BAR: 2'-5"
6. SIDEWALK AND RAILING NOT SHOWN.
7. 3'-0" ITEM 512 - TYPE B WATERPROOFING CENTERED ABOUT CONSTRUCTION JOINT.
8. WATERSTOP EMBEDDED IN WINGWALL FROM BOTTOM OF FOOTING TO TOP OF WINGWALL. CUT WATERSTOP AS NECESSARY TO ACCOMMODATE REBAR. PRODUCT SHALL BE RIBBED CENTERBULB 735 BY SIKA GREENSTREAK, RIBBED CENTERBULB PVC938 BY JP SPECIALTIES INC., OR APPROVED EQUAL 9" LONG PVC RIBBED CENTERBULB WATERSTOP. THE COST OF FURNISHING AND INSTALLING THE WATERSTOP IS INCLUDED IN THE UNIT PRICE BID FOR ITEM 511 - CLASS QC1 CONCRETE WITH QC/QA, ABUTMENT INCLUDING FOOTING, AS PER PLAN.
9. WATERSTOP EMBEDDED IN WINGWALL AND PARAPET/SEMI-INTEGRAL DIAPHRAGM FROM THE ABUTMENT SEAT TO TOP OF WINGWALL. CUT WATERSTOP AS NECESSARY TO ACCOMMODATE REBAR. PRODUCT SHALL BE RIBBED TEAR WEB 700 BY SIKA GREENSTREAK OR APPROVED EQUAL 9" LONG PVC RIBBED TEAR WEB WATERSTOP CAPABLE OF ACCOMMODATING 1 3/8" MOVEMENT IN EACH DIRECTION. CONTRACTOR MAY SPLIT WATERSTOP TO ACCOMMODATE SEPARATE POURS, BUT SHALL WELD SPLICE THE WATERSTOP TO PROVIDE A CONTINUOUS STRIP FOR THE FINAL CONDITION. THE COST OF FURNISHING AND INSTALLING THE WATERSTOP IS INCLUDED IN THE UNIT PRICE BID FOR ITEM 511 - CLASS QC1 CONCRETE WITH QC/QA, ABUTMENT INCLUDING FOOTING, AS PER PLAN.

DESIGN AGENCY
BURGESS & NIPLE
100 WEST ERIE STREET
PAINESVILLE, OHIO 44077

DESIGNED	DRAWN	REVIEWED	DATE
KMA	KMA	DWL	09/2021
CHECKED	REVISED	STRUCTURE FILE NUMBER	
JAA		1876083	

REAR ABUTMENT WINGWALL DETAILS
BRIDGE 00.42
OVER CUYAHOGA RIVER

CUY - OLD
ROCKSIDE ROAD

13A | 44

111A
157

P:\PR57030\Cadd\Sheets\ORR_91563_0042_SR003A.dwg 13-Sep-21 11:29 AM

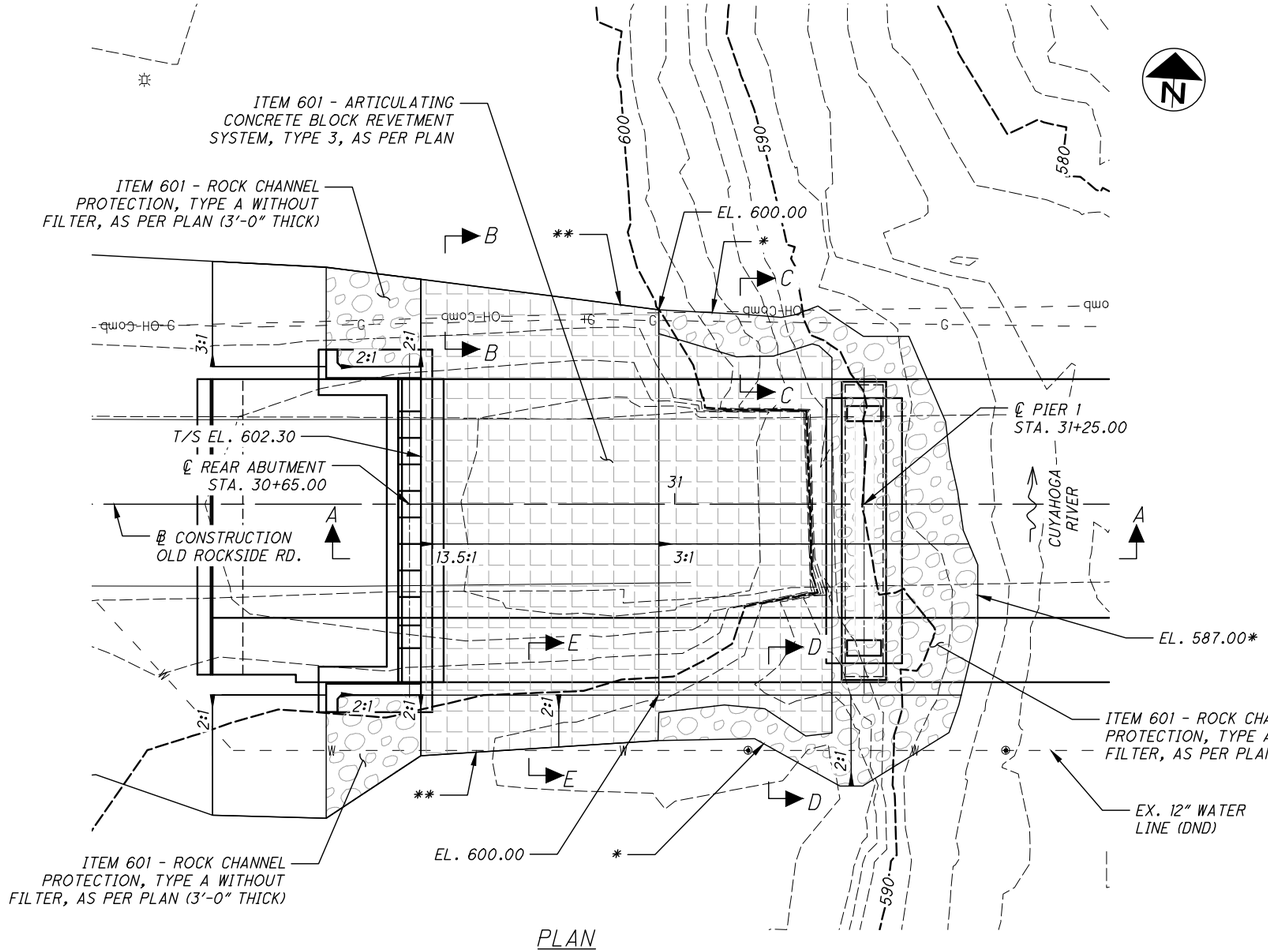

PLAN

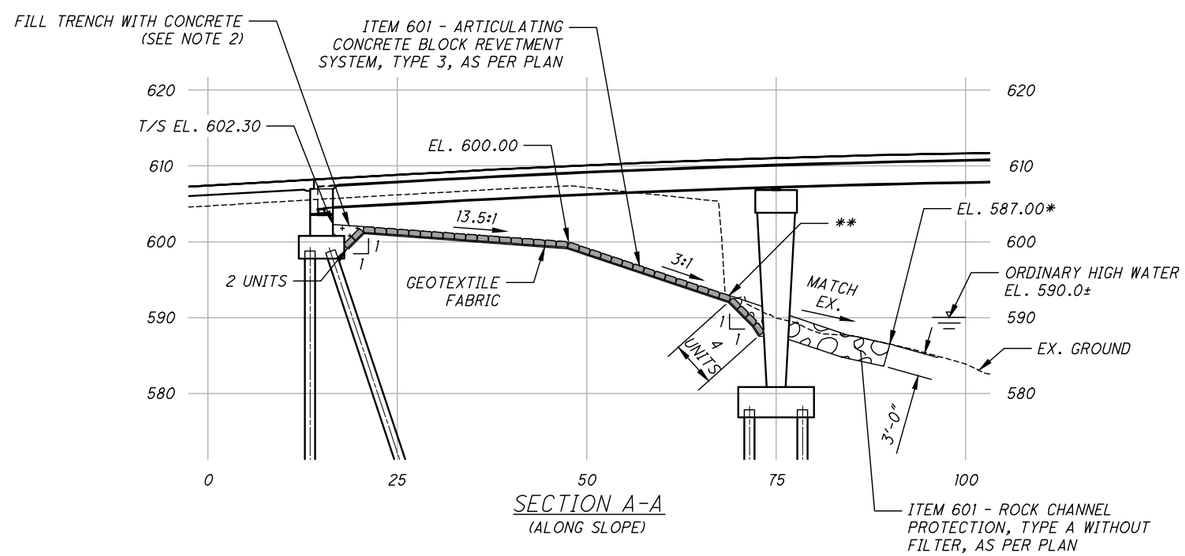

SECTION A-A
(ALONG SLOPE)

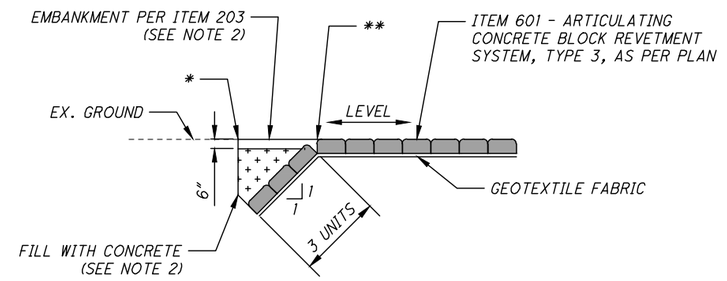

SECTION B-B

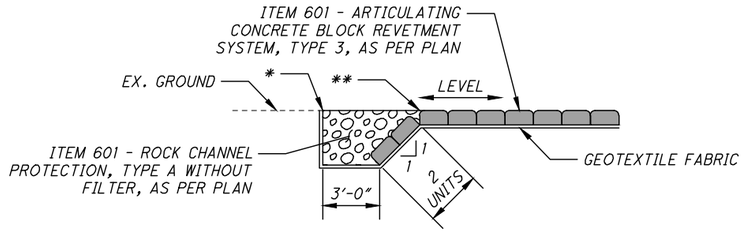

SECTION C-C

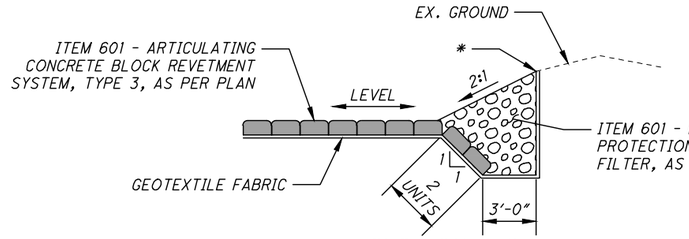

SECTION D-D

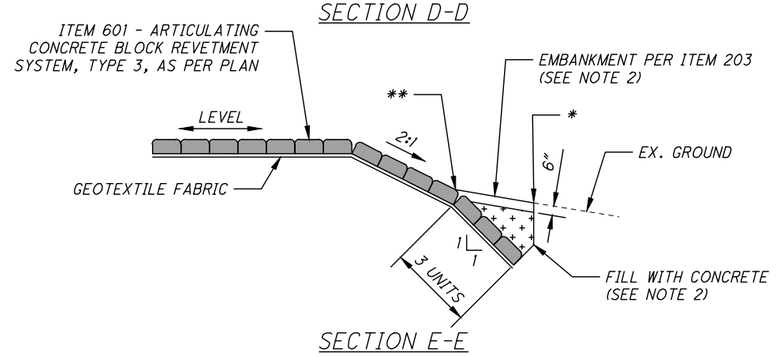

SECTION E-E

NOTES:

1. LAY ARTICULATING CONCRETE BLOCK MATS PERPENDICULAR WITH THE FACE OF ABUTMENT.
2. INCLUDED FOR PAYMENT WITH ITEM 601 - ARTICULATING CONCRETE BLOCK REVETMENT SYSTEM, TYPE 3, AS PER PLAN. SEE SHEET 5/44 FOR NOTE.

LEGEND:

* = MEET EXISTING GROUND

** = MATCH EXISTING SLOPE UNTIL EXISTING GROUND IS MET

= ITEM 601 - ROCK CHANNEL PROTECTION, TYPE A WITHOUT FILTER, AS PER PLAN

= ITEM 601 - ARTICULATING CONCRETE BLOCK REVETMENT SYSTEM, TYPE 3, AS PER PLAN

= CONCRETE FILL

DESIGN AGENCY
BURGESS & NIPLE
100 WEST ERIE STREET
PAINESVILLE, OHIO 44077

DESIGNED	DRAWN	REVIEWED	DATE
KMA	KMA	DWL	09/2021
CHECKED	REVISED	STRUCTURE FILE NUMBER	
JAA		1876083	

REAR ABUTMENT SLOPE PROTECTION DETAILS
BRIDGE 00.42
OVER CUYAHOGA RIVER

CUY - OLD ROCKSIDE ROAD

13B / 44

111B / 157

P:\PR57030\Cadd\Sheets\ORR_91563_0042_SR005.dwg 13-Sep-21 11:30 AM

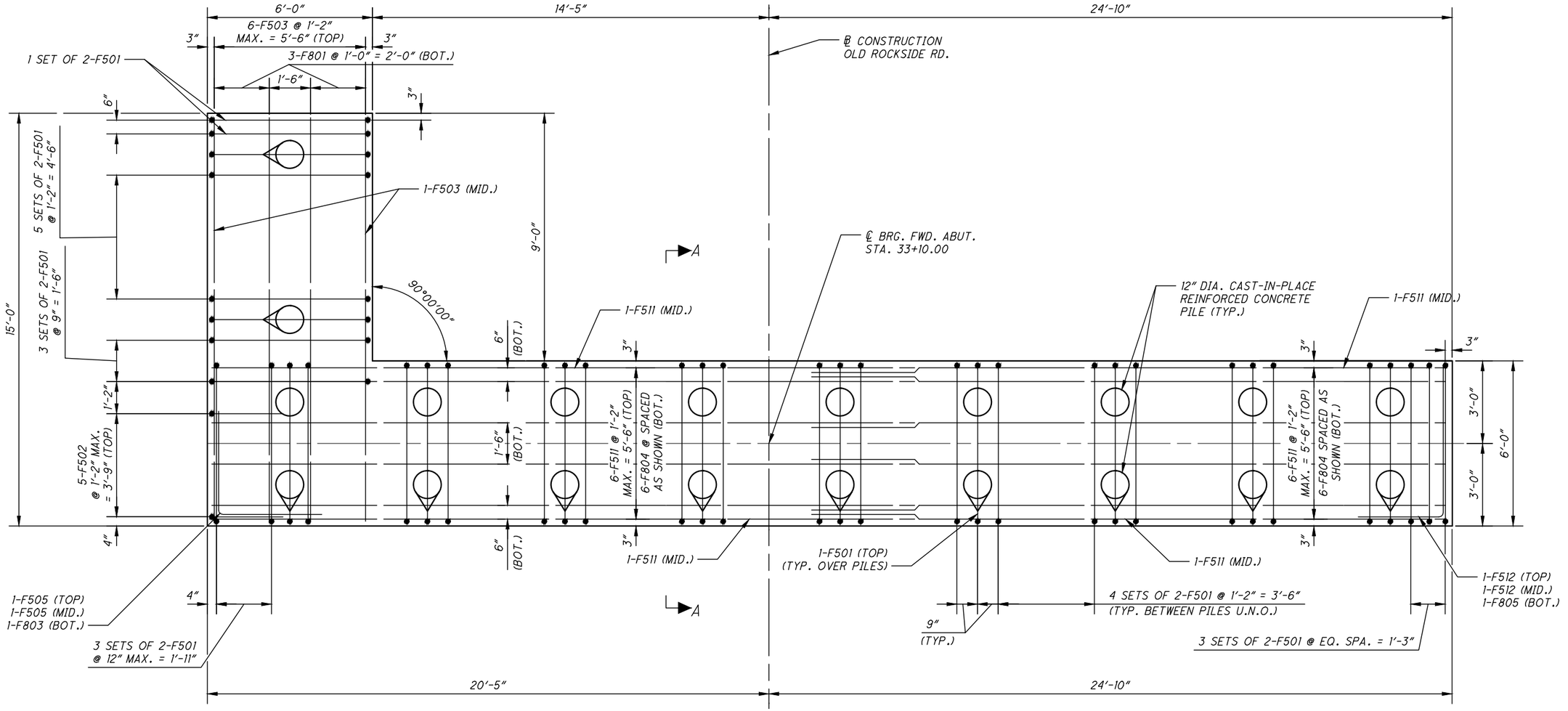

FORWARD ABUTMENT FOOTING PLAN

NOTES:

1. SEE SHEET 11/44 FOR PILE LAYOUT.
2. SEE SHEET 15/44 FOR FORWARD ABUTMENT PLAN AND ELEVATION.
3. SEE ODOT STD. BRIDGE DWG. SICD-1-96 FOR ADDITIONAL NOTES AND DETAILS.
4. MINIMUM LAP LENGTHS:
   #5 BAR = 3'-1"
   #8 BAR = 3'-9"
5. SEE SHEET 17/44 FOR SECTION A-A.

DESIGN AGENCY
BURGESS & NIPLE
100 WEST ERIE STREET
PAINESVILLE, OHIO 44077

DESIGNED	DRAWN	REVIEWED	DATE
BCS	BCS	DWL	09/2021
CHECKED	REVISED	STRUCTURE FILE NUMBER	
SJA/MAB		1876083	

FORWARD ABUTMENT FOOTING PLAN
BRIDGE 00.42
OVER CUYAHOGA RIVER

CUY - OLD ROCKSIDE ROAD

14 / 44

112
157

P:\PR57030\Cadd\Sheets\ORR_91563_0042_SF003.dwg 13-Sep-21 11:30 AM

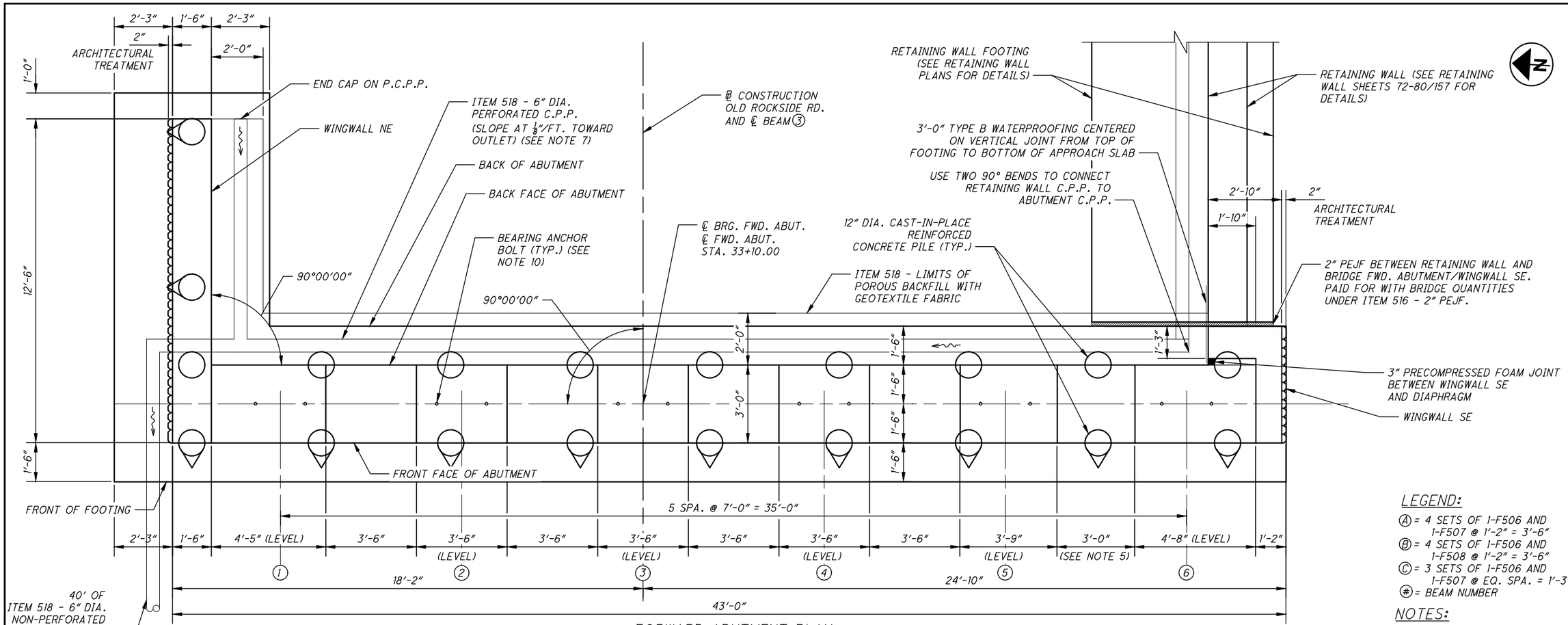

FORWARD ABUTMENT PLAN

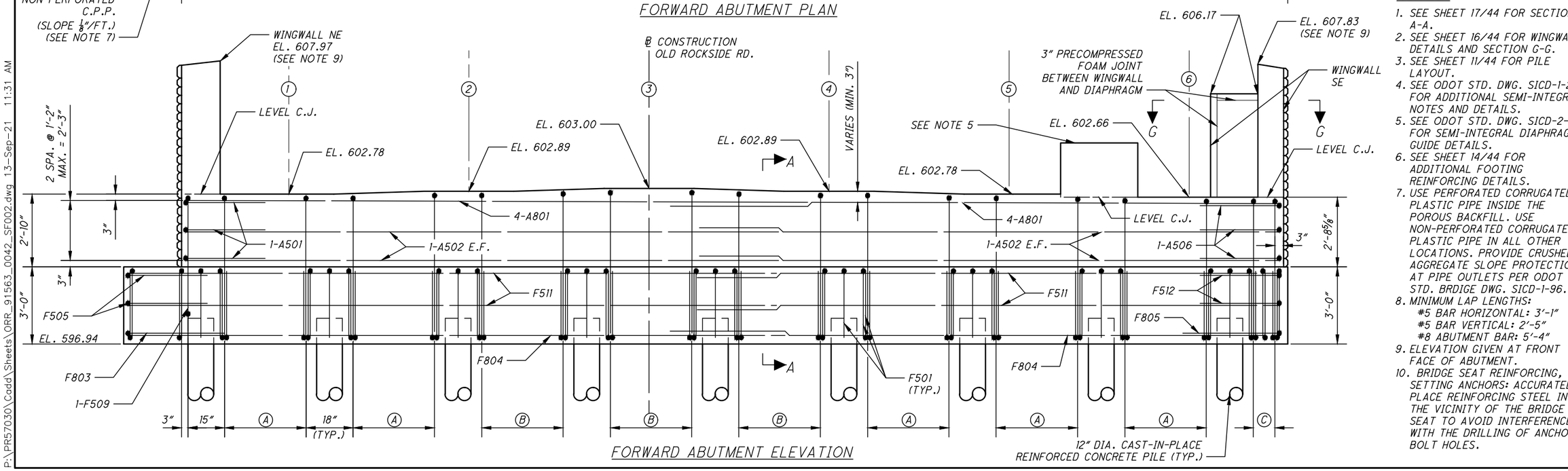

FORWARD ABUTMENT ELEVATION

LEGEND:

Ⓐ = 4 SETS OF 1-F506 AND 1-F507 @ 1'-2" = 3'-6"
Ⓑ = 4 SETS OF 1-F506 AND 1-F508 @ 1'-2" = 3'-6"
Ⓒ = 3 SETS OF 1-F506 AND 1-F507 @ EQ. SPA. = 1'-3"
= BEAM NUMBER

NOTES:

1. SEE SHEET 17/44 FOR SECTION A-A.
2. SEE SHEET 16/44 FOR WINGWALL DETAILS AND SECTION G-G.
3. SEE SHEET 11/44 FOR PILE LAYOUT.
4. SEE ODOT STD. DWG. SICD-1-21 FOR ADDITIONAL SEMI-INTEGRAL NOTES AND DETAILS.
5. SEE ODOT STD. DWG. SICD-2-14 FOR SEMI-INTEGRAL DIAPHRAGM GUIDE DETAILS.
6. SEE SHEET 14/44 FOR ADDITIONAL FOOTING REINFORCING DETAILS.
7. USE PERFORATED CORRUGATED PLASTIC PIPE INSIDE THE POROUS BACKFILL. USE NON-PERFORATED CORRUGATED PLASTIC PIPE IN ALL OTHER LOCATIONS. PROVIDE CRUSHED AGGREGATE SLOPE PROTECTION AT PIPE OUTLETS PER ODOT STD. BRDIGE DWG. SICD-1-96.
8. MINIMUM LAP LENGTHS:
   #5 BAR HORIZONTAL: 3'-1"
   #5 BAR VERTICAL: 2'-5"
   #8 ABUTMENT BAR: 5'-4"
9. ELEVATION GIVEN AT FRONT FACE OF ABUTMENT.
10. BRIDGE SEAT REINFORCING, SETTING ANCHORS: ACCURATELY PLACE REINFORCING STEEL IN THE VICINITY OF THE BRIDGE SEAT TO AVOID INTERFERENCE WITH THE DRILLING OF ANCHOR BOLT HOLES.

DESIGN AGENCY
BURGESS & NIPLE
100 WEST ERIE STREET
PAINESVILLE, OHIO 44077

DESIGNED	DRAWN	REVIEWED	DATE
BCS	BCS	DWL	09/2021
CHECKED	REVISED	STRUCTURE FILE NUMBER	
SJA/MAB		1876083	

FORWARD ABUTMENT PLAN AND ELEVATION

BRIDGE 00.42
OVER CUYAHOGA RIVER

CUY - OLD ROCKSIDE ROAD

P:\PR57030\Cadd\Sheets\ORR_91563_0042_SF002.dwg 13-Sep-21 11:31 AM

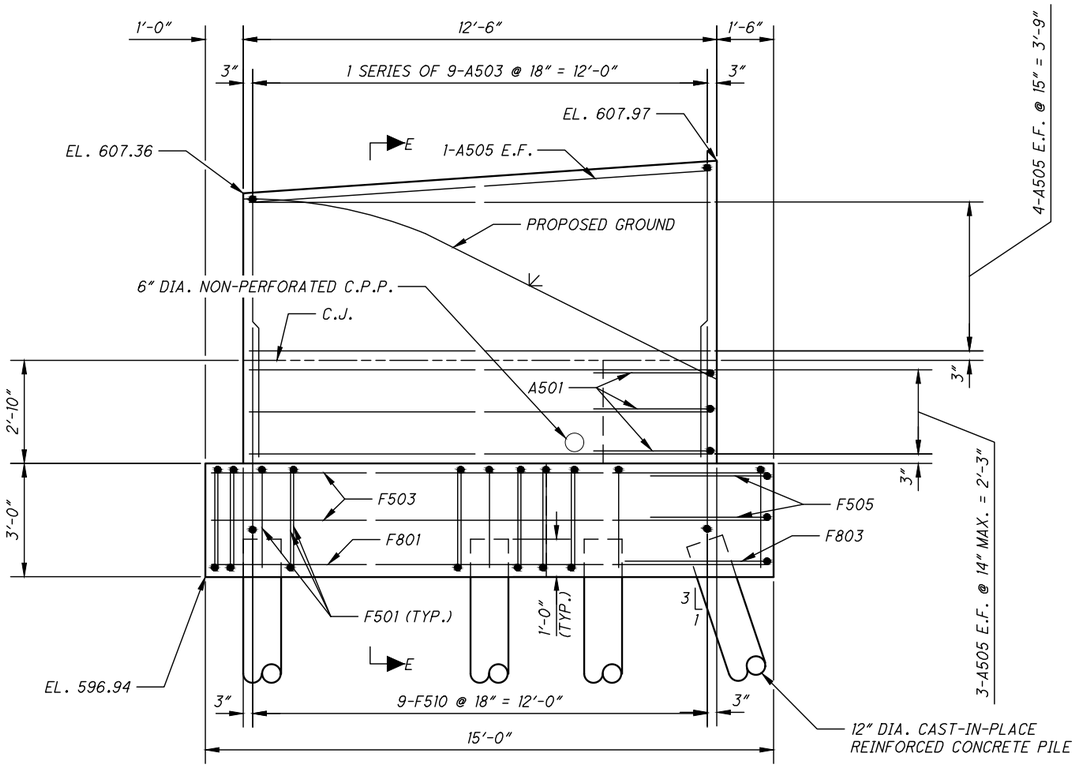

WINGWALL NE ELEVATION

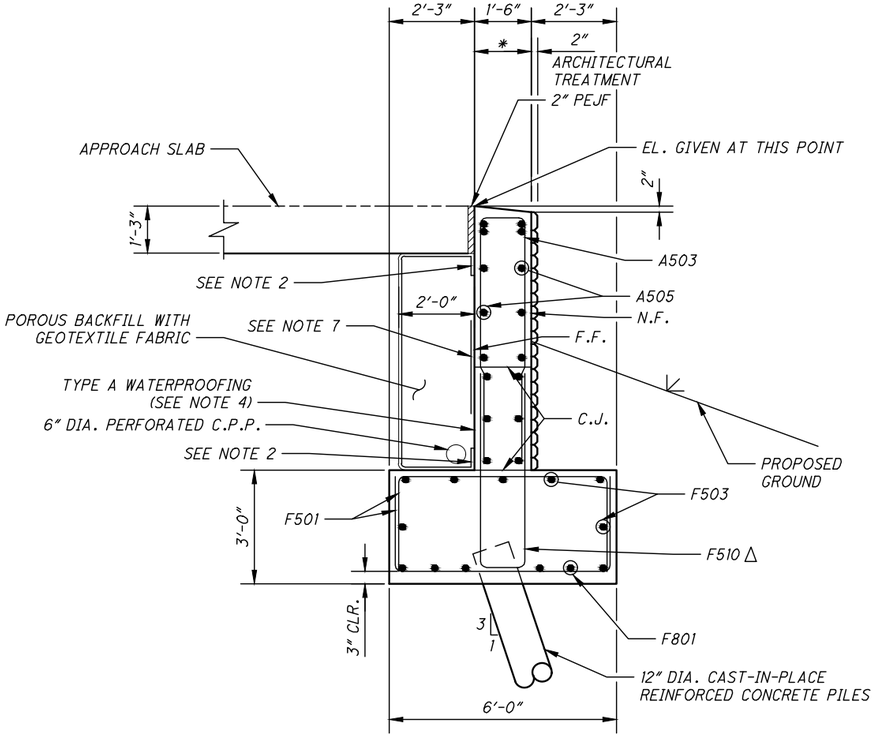

SECTION E-E

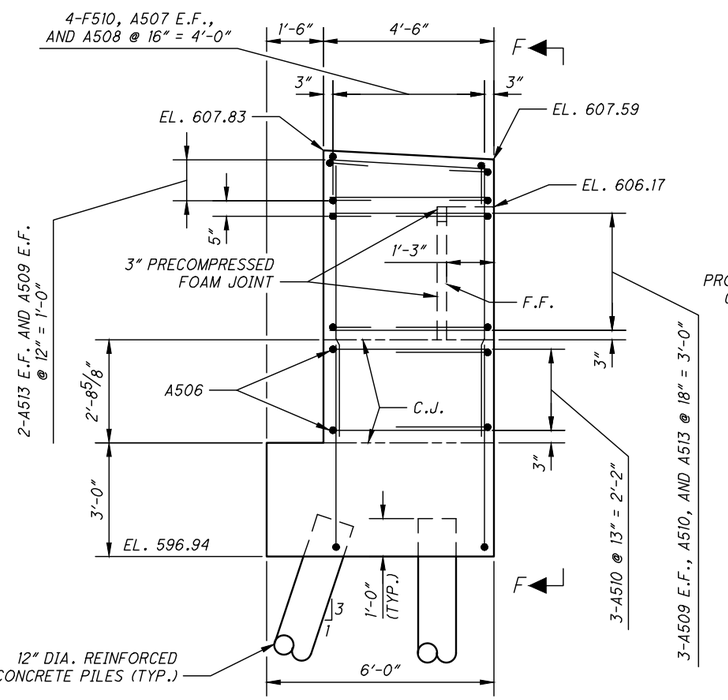

WINGWALL SE ELEVATION

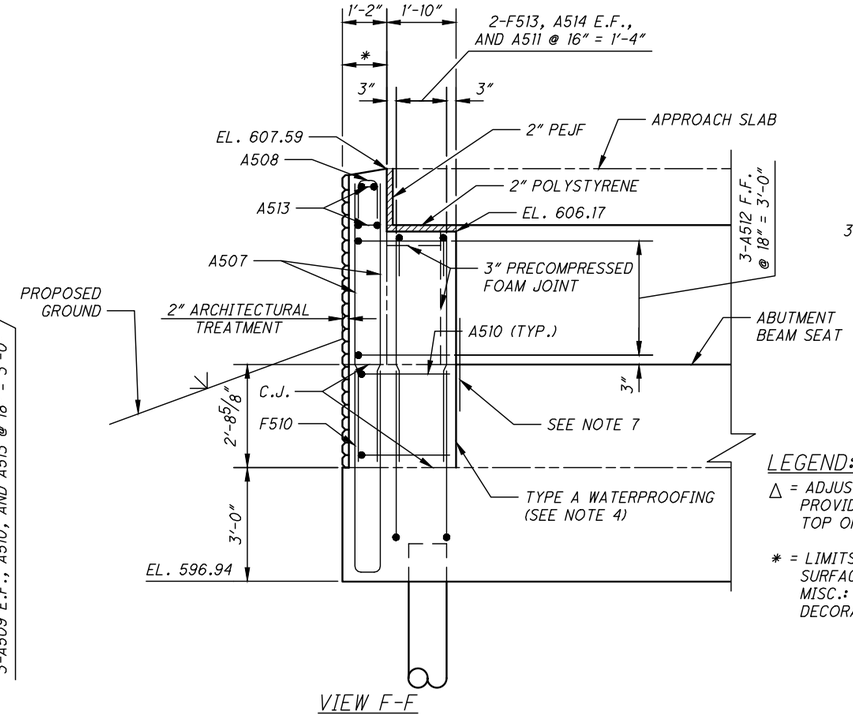

VIEW F-F

(SIDEWALK NOT SHOWN)

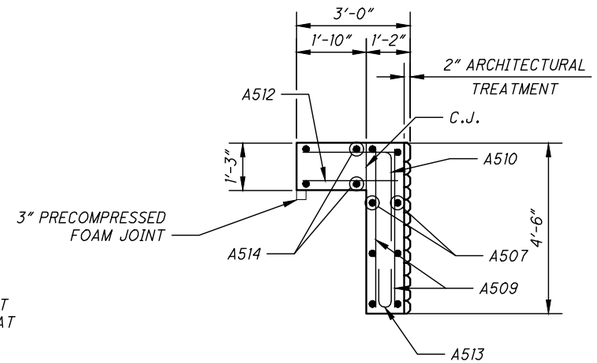

SECTION G-G

LEGEND:

Δ = ADJUST BAR UP AS NEEDED TO PROVIDE 2" MIN. CLEARANCE OVER TOP OF PILE

* = LIMITS OF SEALING CONCRETE SURFACES ITEM SPECIAL - SEALING MISC.: ELASTOMERIC PROTECTIVE AND DECORATIVE CONCRETE COATING

NOTES:

1. SEE SHEET 13/44 FOR ADDITIONAL NOTES.
2. TURN GEOTEXTILE FABRIC UP 6" AT BASE OF WALL AND DOWN 6" AT TOP OF WALL.
3. SEE SHEET 11/44 FOR PILE LAYOUT.
4. PROVIDE TYPE A WATERPROOFING FROM TOP OF FOOTING TO BOTTOM OF 2" PEJF.
5. MINIMUM LAP LENGTHS:
   #5 BAR: 2'-5"
6. SIDEWALK AND RAILING NOT SHOWN.
7. 3'-0" ITEM 512 - TYPE B WATERPROOFING CENTERED ABOUT CONSTRUCTION JOINT.

DESIGN AGENCY
BURGESS & NIPLE
100 WEST ERIE STREET
PAINESVILLE, OHIO 44077

DESIGNED	DRAWN	REVIEWED	DATE
BCS	BCS	DWL	09/2021
CHECKED	REVISED	STRUCTURE FILE NUMBER	
SJA/MAB		1876083	

FORWARD ABUTMENT WINGWALL DETAILS
BRIDGE 00.42
OVER CUYAHOGA RIVER

CUY - OLD
ROCKSIDE ROAD

16 / 44

114
157

P:\PR57030\Cadd\Sheets\ORR_91563_0042_SR003.dwg 13-Sep-21 11:31 AM

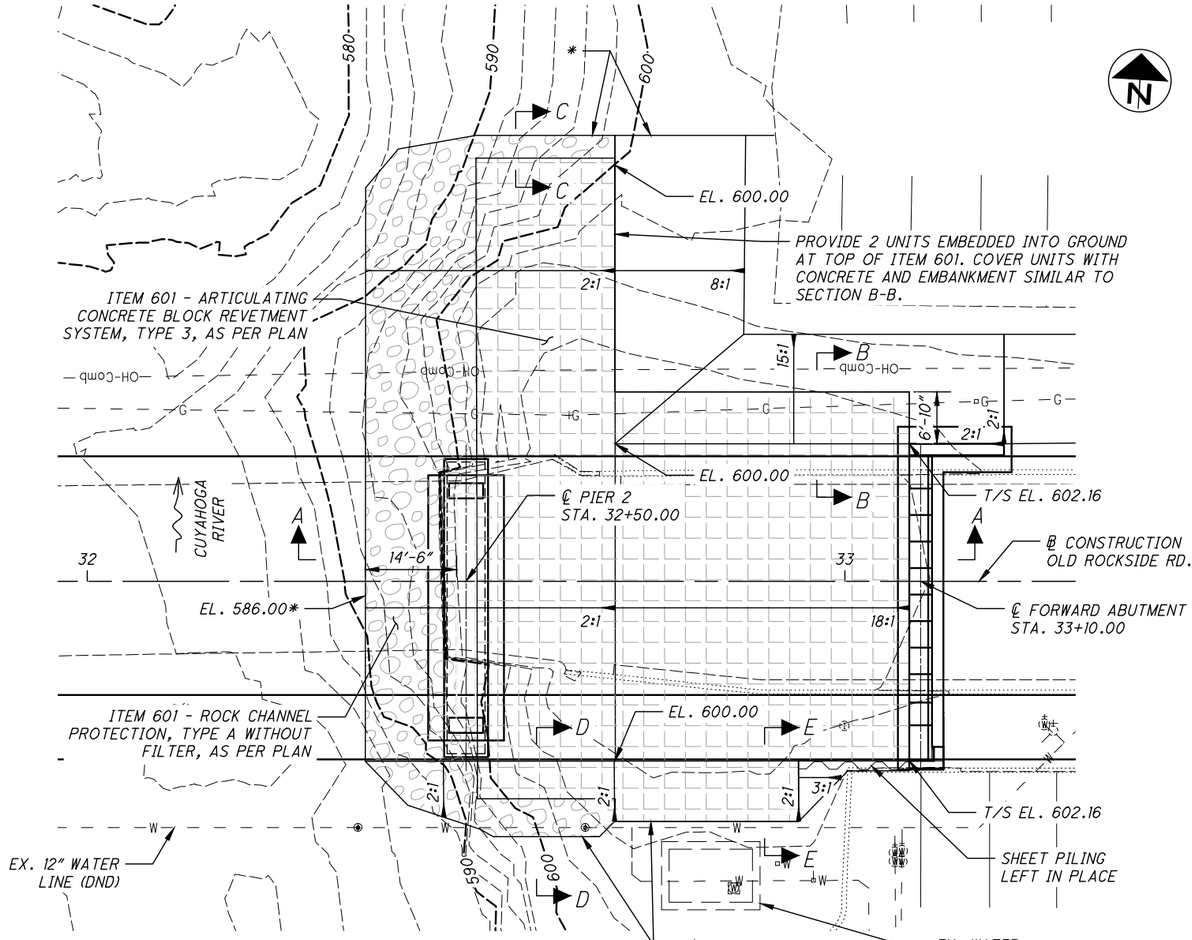

PLAN

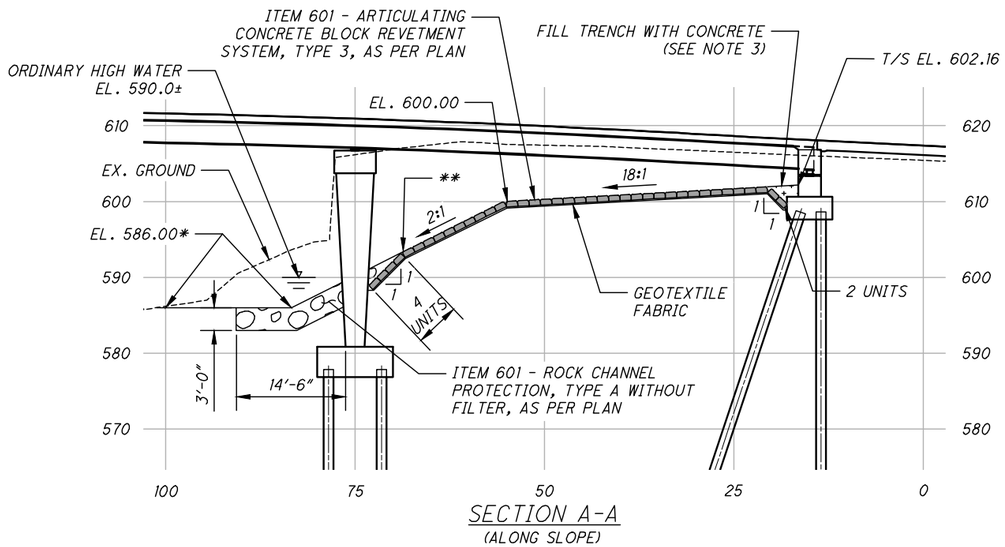

SECTION A-A
(ALONG SLOPE)

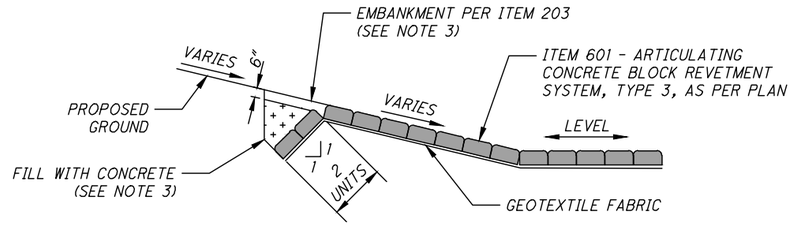

SECTION B-B

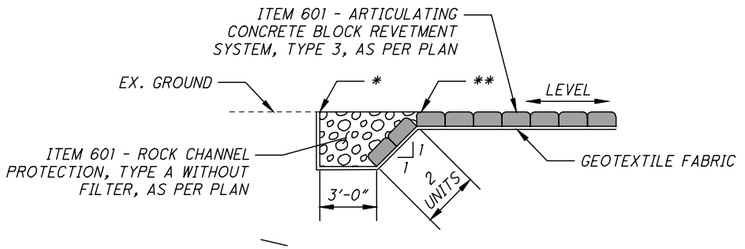

SECTION C-C

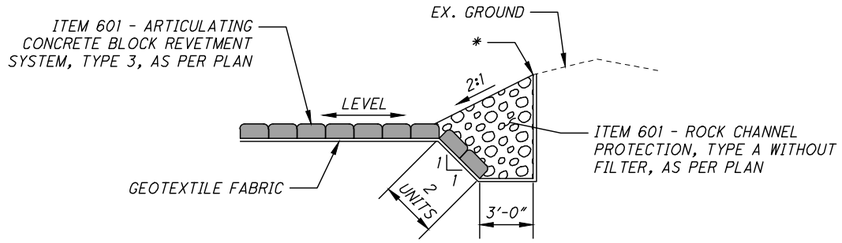

SECTION D-D

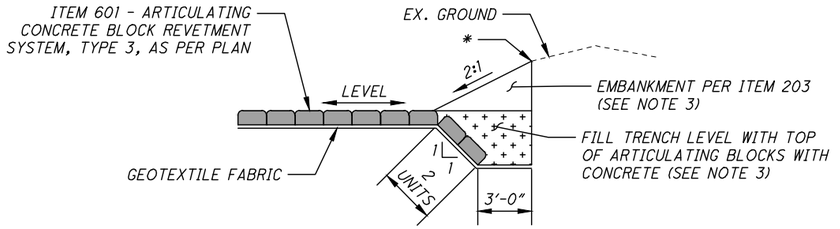

SECTION E-E

NOTES:

1. SEE ROADWAY SHEET 63/157 FOR PARKING LOT RESTORATION DETAILS AND ELEVATIONS.
2. LAY ARTICULATING CONCRETE BLOCK MATS PERPENDICULAR WITH THE FACE OF ABUTMENT.
3. INCLUDED FOR PAYMENT WITH ITEM 601 - ARTICULATING CONCRETE BLOCK REVETMENT SYSTEM, TYPE 3, AS PER PLAN. SEE SHEET 5/44 FOR NOTE.

LEGEND:

* = MEET EXISTING GROUND

** = MATCH EXISTING SLOPE UNTIL EXISTING GROUND IS MET

= ITEM 601 - ROCK CHANNEL PROTECTION, TYPE A WITHOUT FILTER, AS PER PLAN

= ITEM 601 - ARTICULATING CONCRETE BLOCK REVETMENT SYSTEM, TYPE 3, AS PER PLAN

= CONCRETE FILL

DESIGN AGENCY
BURGESS & NIPLE
100 WEST ERIE STREET
PAINESVILLE, OHIO 44077

DESIGNED	DRAWN	REVIEWED	DATE
KMA	KMA	DWL	09/2021
CHECKED	REVISED	STRUCTURE FILE NUMBER	
JAA		1876083	

FORWARD ABUTMENT SLOPE PROTECTION DETAILS
BRIDGE 00.42
OVER CUYAHOGA RIVER

CUY - OLD ROCKSIDE ROAD

16A / 44

114A / 157

P:\PR57030\Cadd\Sheets\ORR_91563_0042_SF004.dwg 13-Sep-21 11:32 AM

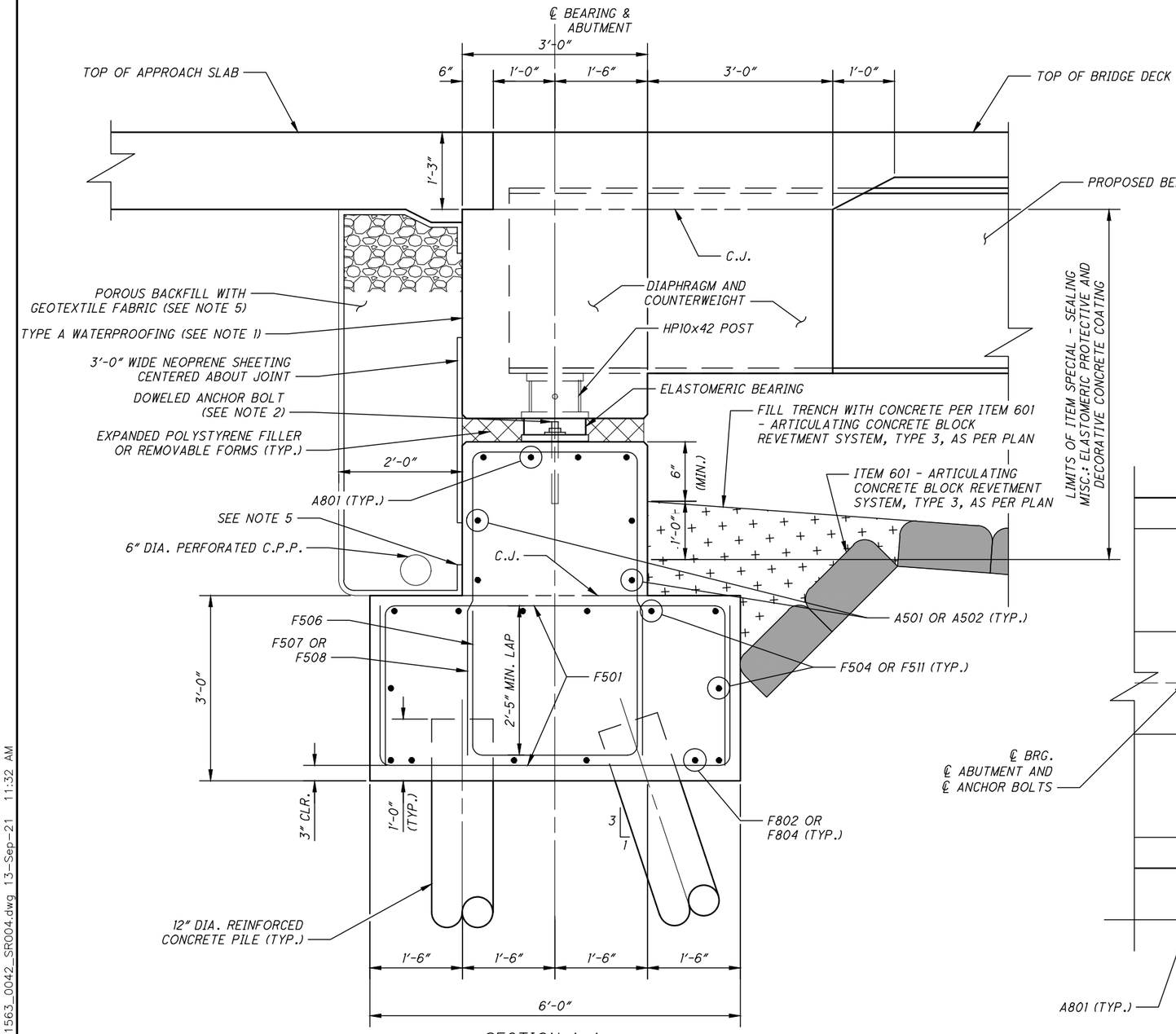

SECTION A-A

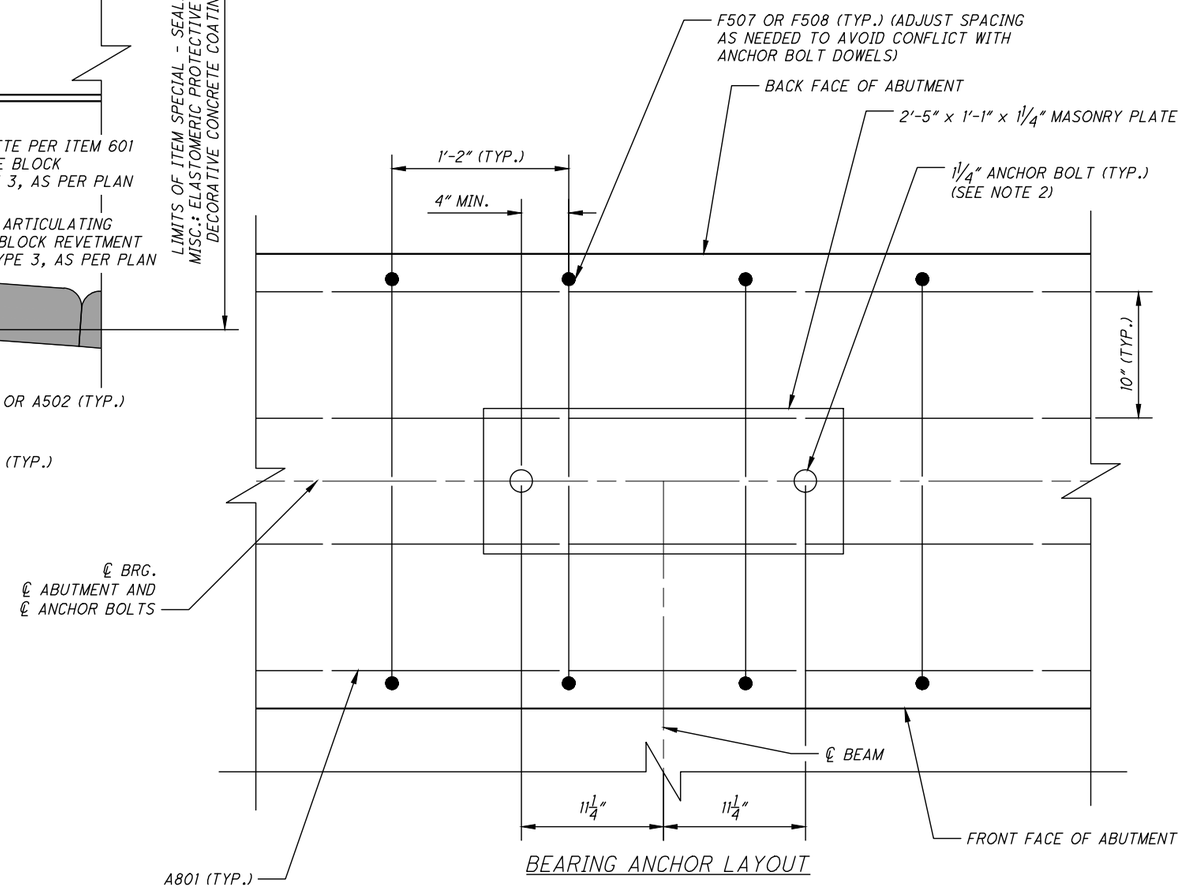

BEARING ANCHOR LAYOUT

NOTES:

1. PROVIDE TYPE A WATERPROOFING FROM TOP OF FOOTING TO BOTTOM OF APPROACH SLAB.
2. SEE SHEET 24/44 FOR ANCHOR BOLT LAYOUT, DETAILS, AND PAYMENT.
3. BRIDGE SEAT REINFORCING, SETTING ANCHORS: ACCURATELY PLACE REINFORCING STEEL IN THE VICINITY OF THE BRIDGE SEAT TO AVOID INTERFERENCE WITH THE DRILLING OF ANCHOR BOLT HOLES.
4. 3'-0" WIDE ITEM 512 - TYPE B WATERPROOFING CENTERED ABOUT CONSTRUCTION JOINT.
5. TURN GEOTEXTILE FABRIC UP 6" AT BASE OF WALL AND DOWN 6" AT TOP OF WALL.

DESIGN AGENCY
BURGESS & NIPLE
100 WEST ERIE STREET
PAINESVILLE, OHIO 44077

DESIGNED BCS | DRAWN BCS | REVIEWED DWL | DATE 09/2021
CHECKED SJA/MAB | REVISED | STRUCTURE FILE NUMBER 1876083

TYPICAL ABUTMENT DETAILS

BRIDGE 00.42
OVER CUYAHOGA RIVER

CUY - OLD ROCKSIDE ROAD

P:\PR57030\Cadd\Sheets\ORR_91563_0042_SR004.dwg 13-Sep-21 11:32 AM

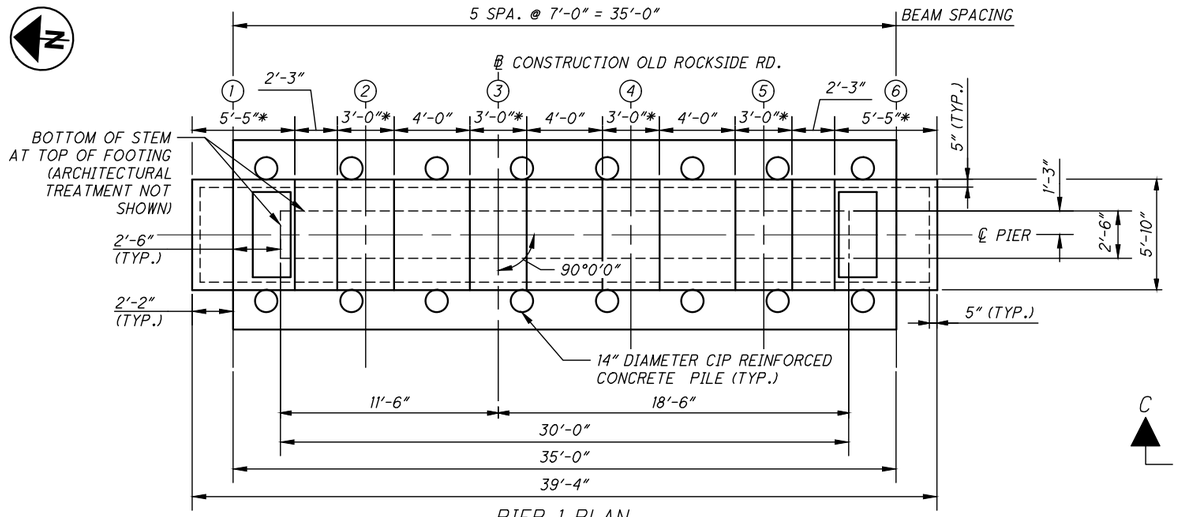

PIER 1 PLAN

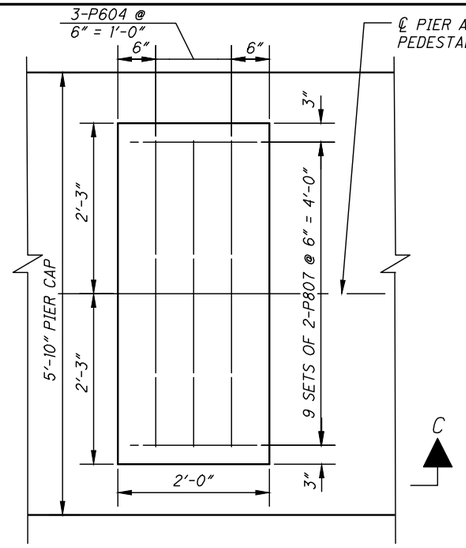

SEISMIC PEDESTAL PLAN

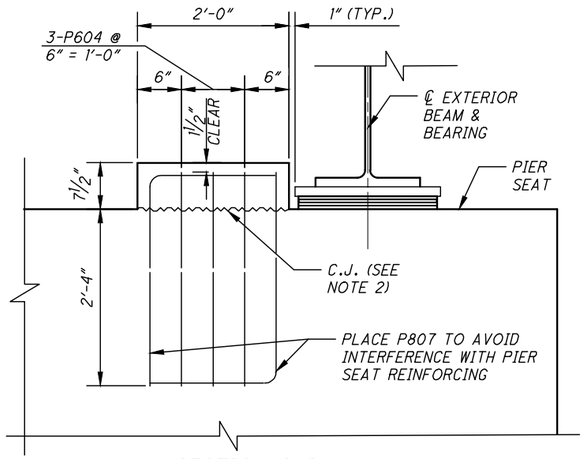

SECTION C-C

ITEM SPECIAL - SEALING MISC.: ELASTOMERIC PROTECTIVE AND DECORATIVE CONCRETE COATING (ALL FACES CAP ONLY)

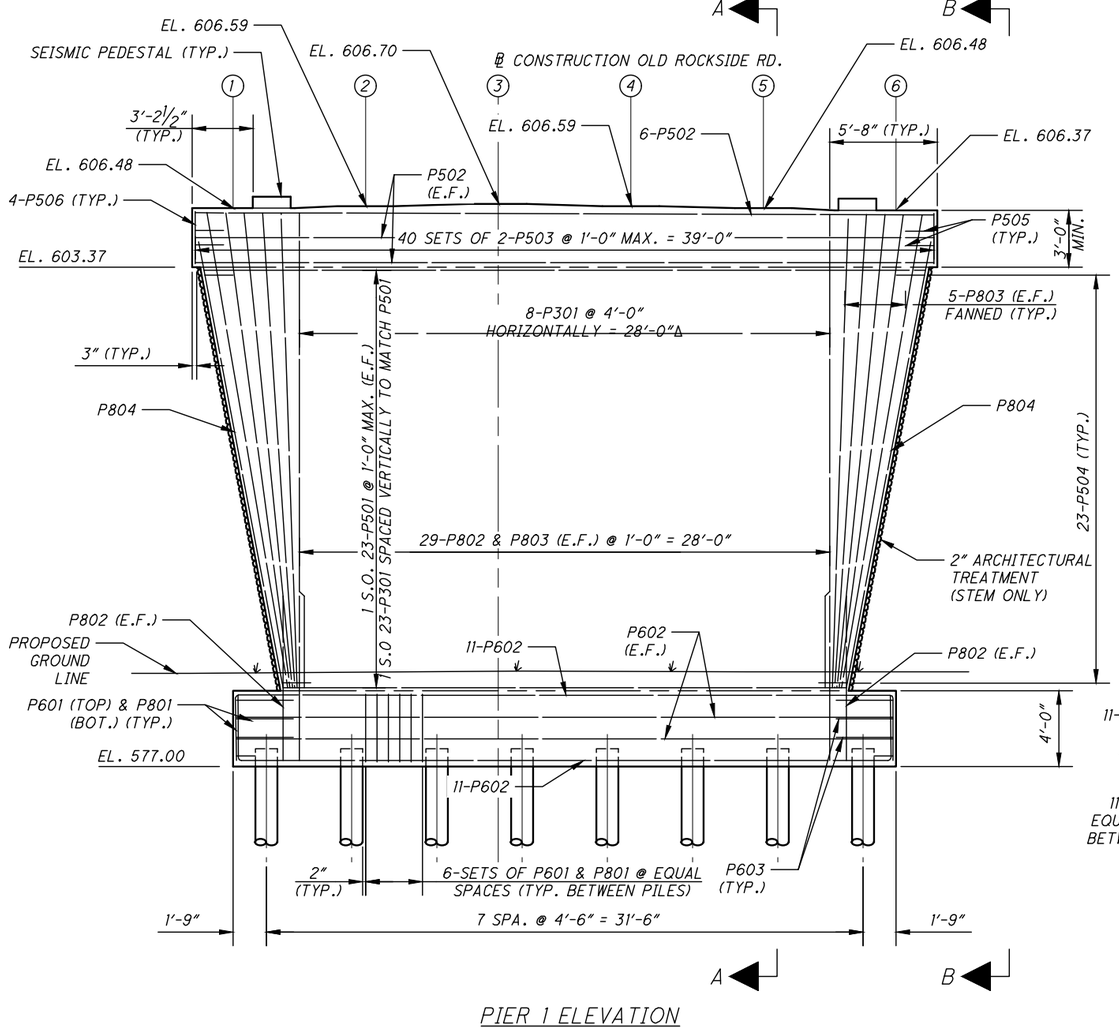

PIER 1 ELEVATION

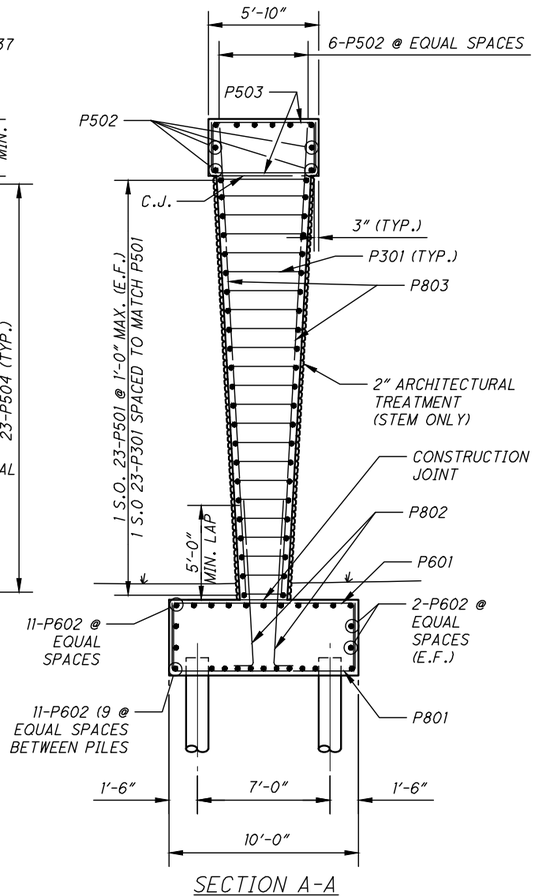

SECTION A-A

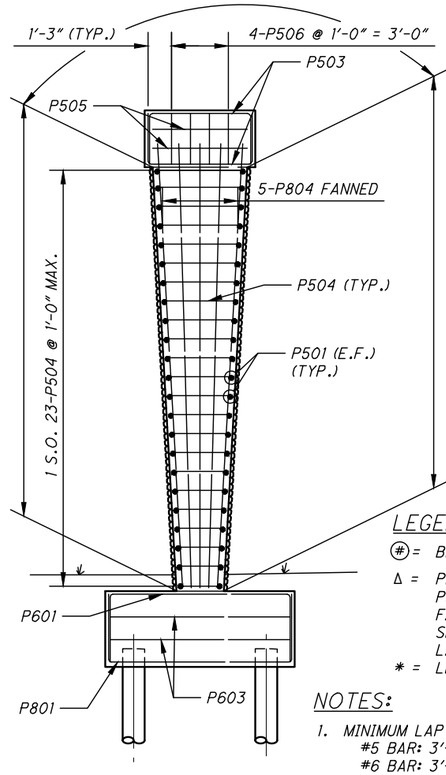

VIEW B-B

LEGEND:

- (#) = BEAM NUMBER
- Δ = PLACE 135 DEGREE BEND OF P301 BAR ON OPPOSITE FACE, EVERY OTHER BAR. SEE SHEET 19/44 FOR LATERAL TIE DETAIL.
- ✱ = LEVEL

NOTES:

1. MINIMUM LAP LENGTHS:
   #5 BAR: 3'-1"
   #6 BAR: 3'-8"
   #8 BAR: 4'-9"
2. THE SURFACE OF THE SEAT IN THIS AREA SHALL BE FINISHED WITH A SERRATED TROWEL. THE SERRATIONS SHALL BE ¼" DEEP MINIMUM.
3. CONCRETE IS TO BE KEPT BARE UNDER THE PIER BEARINGS PER CMS 516.07

DESIGN AGENCY
BURGESS & NIPLE
100 WEST ERIE STREET
PAINESVILLE, OHIO 44077

DESIGNED	DRAWN	REVIEWED	DATE
GJL	GJL	DWL	09/2021
CHECKED	REVISED	STRUCTURE FILE NUMBER	
MAB		1876083	

PIER 1 DETAILS
BRIDGE 00.42
OVER CUYAHOGA RIVER

CUY - OLD ROCKSIDE ROAD

18 / 44

116 / 157

P:\PR57030\Cadd\Sheets\ORR_91563_0042_S001.dwg 13-Sep-21 11:33 AM

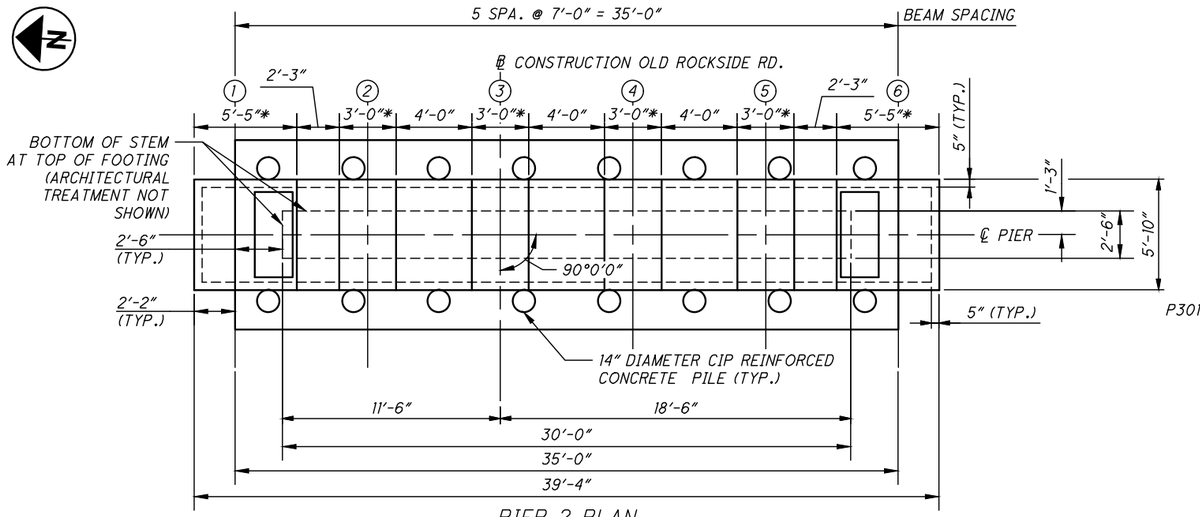

PIER 2 PLAN

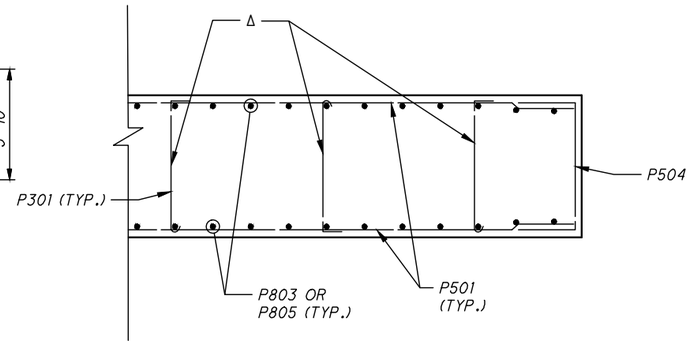

LATERAL TIE DETAIL
(PLAN VIEW)

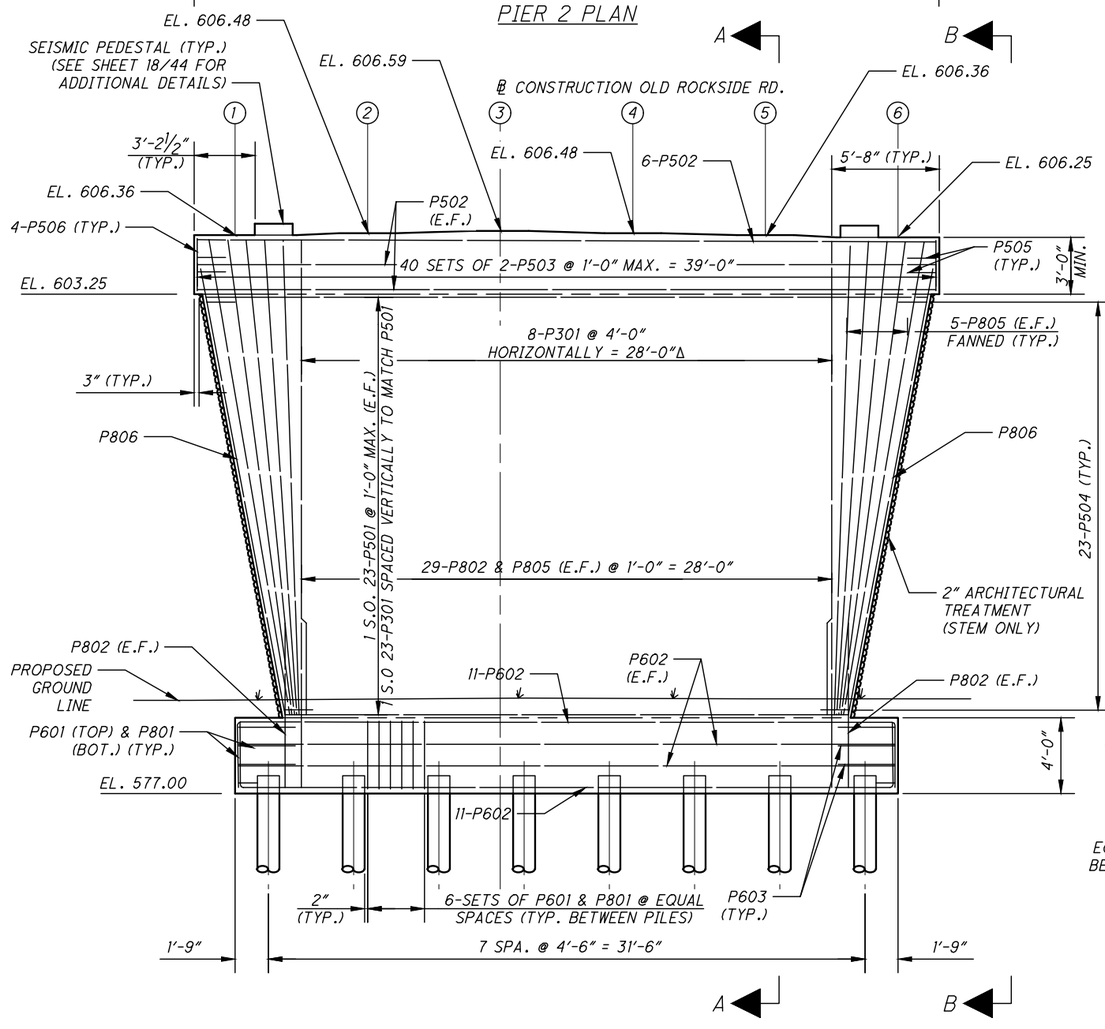

PIER 2 ELEVATION

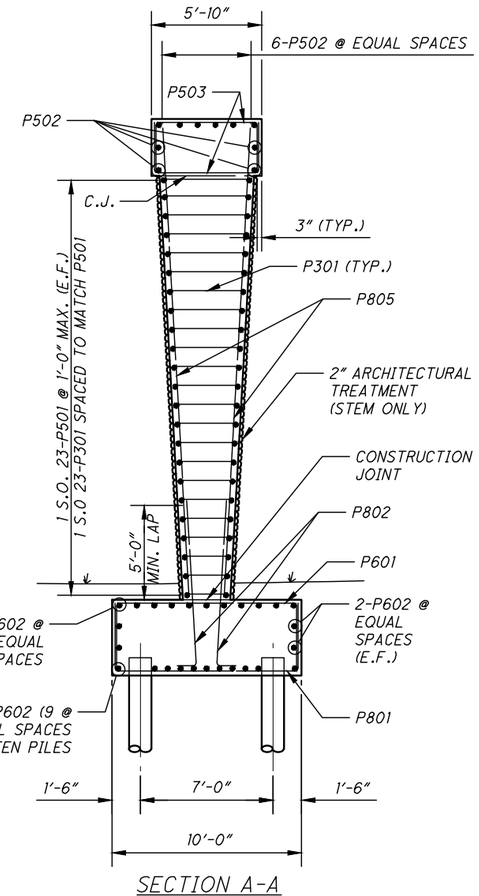

SECTION A-A

ITEM SPECIAL - SEALING MISC.: ELASTOMERIC PROTECTIVE AND DECORATIVE CONCRETE COATING (ALL FACES CAP ONLY)

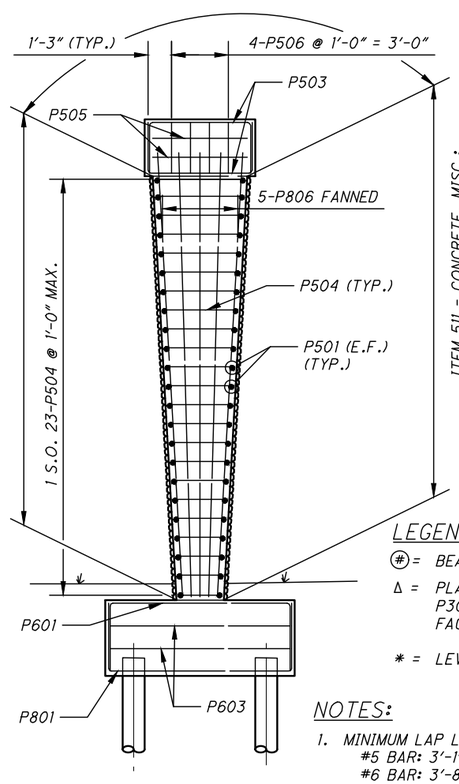

VIEW B-B

LEGEND:

(#) = BEAM NUMBER

Δ = PLACE 135 DEGREE BEND OF P301 BAR ON OPPOSITE FACE, EVERY OTHER BAR.

* = LEVEL

NOTES:

1. MINIMUM LAP LENGTHS:
   #5 BAR: 3'-1"
   #6 BAR: 3'-8"
   #8 BAR: 4'-9"
2. THE SURFACE OF THE SEAT IN THIS AREA SHALL BE FINISHED WITH A SERRATED TROWEL. THE SERRATIONS SHALL BE ¼" DEEP MINIMUM.
3. CONCRETE IS TO BE KEPT BARE UNDER THE PIER BEARINGS PER CMS 516.07

DESIGN AGENCY
BURGESS & NIPLE
100 WEST ERIE STREET
PAINESVILLE, OHIO 44077

DESIGNED	DRAWN	REVIEWED	DATE
GJL	GJL	DWL	09/2021
CHECKED	REVISED	STRUCTURE FILE NUMBER	
MAB		1876083	

PIER 2 DETAILS
BRIDGE 00.42
OVER CUYAHOGA RIVER

CUY - OLD ROCKSIDE ROAD

19 / 44

117
157

P:\PR57030\Cadd\Sheets\ORR_91563_0042_SI002.dwg 13-Sep-21 11:33 AM

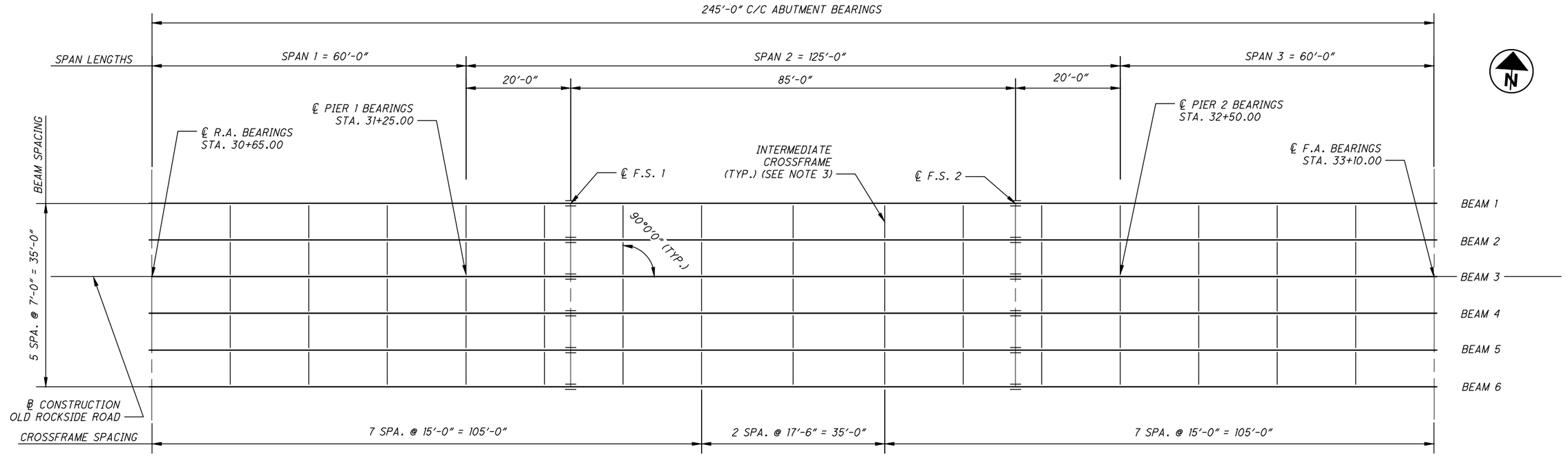

FRAMING PLAN

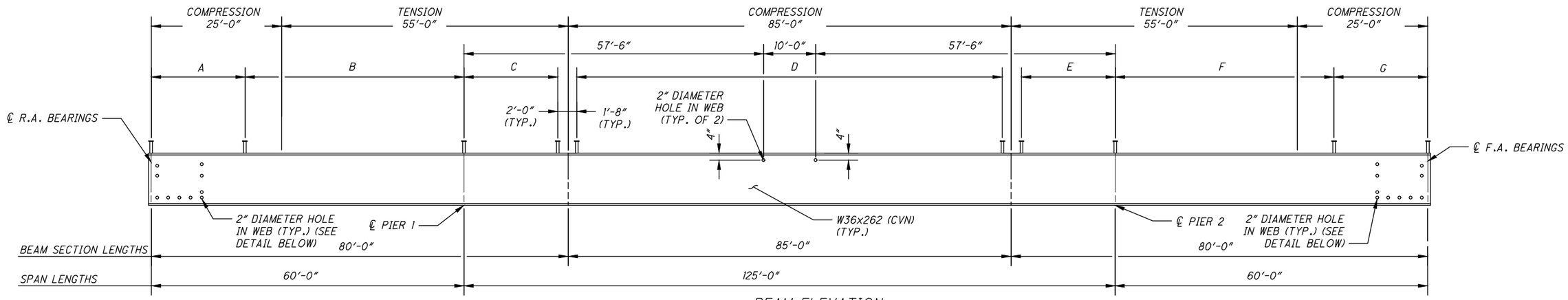

BEAM ELEVATION

SECTION	SHEAR STUD SPACING
A	27 SPA. @ 8" = 18'-0"
B	42 SPA. @ 12" = 42'-0"
C	12 SPA. @ 18" = 18'-0"
D	70 SPA. @ 14" = 81'-8"
E	12 SPA. @ 18" = 18'-0"
F	42 SPA. @ 12" = 42'-0"
G	27 SPA. @ 8" = 18'-0"

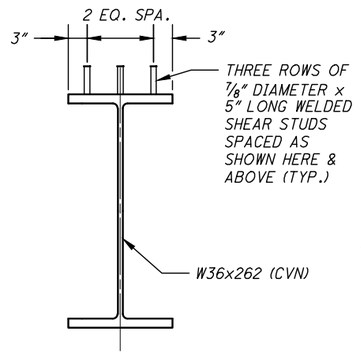

SHEAR CONNECTOR DETAIL

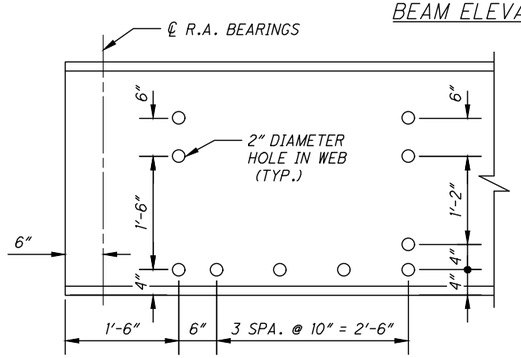

TYPICAL BEAM END DETAIL
(REAR END SHOWN, FORWARD END OPPOSITE HAND)

NOTES:

1. WHERE A SHAPE OR PLATE IS DESIGNATED (CVN), FURNISH MATERIAL THAT MEETS THE MINIMUM NOTCH TOUGHNESS REQUIREMENTS AS SPECIFIED IN ODOT CMS 711.01.
2. WELD ATTACHMENT OF SUPPORTS FOR CONCRETE DECK FINISHING MACHINE TO AREAS OF THE FASCIA BEAM FLANGES DESIGNATED "COMPRESSION". DO NOT WELD ATTACHMENTS TO AREAS DESIGNATED "TENSION". FILLET WELDS TO COMPRESSION FLANGES SHALL BE AT LEAST 1" FROM EDGE OF FLANGE, BE NO MORE THAN 2" LONG, AND BE AT LEAST 1/4" FOR THICKNESSES UP TO 3/4" OR 5/16" FOR GREATER THAN 3/4" THICK.
3. SEE ODOT STANDARD BRIDGE DRAWING GSD-1-19 FOR INTERMEDIATE CROSSFRAME DETAILS. USE TYPE A OR TYPE B INTERMEDIATE CROSSFRAMES AS SHOWN IN THE STANDARD DRAWING. THE ESTIMATED QUANTITY FOR STRUCTURAL STEEL IS BASED ON THE USE OF TYPE A INTERMEDIATE CROSSFRAMES.
5. CROSSFRAME STIFFENERS NOT SHOWN IN ELEVATION. SEE FRAMING PLAN FOR LOCATIONS.
6. ALL DIMENSIONS ARE HORIZONTAL AND REQUIRE ADJUSTMENT FOR CAMBER AND FINISHED GRADE.
7. ALL STRUCTURAL STEEL SHALL BE ASTM A709 GRADE 50W AND SHALL BE SHOP PRIMED AND FIELD PAINTED PER CMS 514. TOP COAT ON INTERIOR BEAMS SHALL BE GRAY PER FEDERAL COLOR NO. 595C-16640. TOP COAT ON FASCIA BEAMS SHALL BE BLACK, FEDERAL COLOR NO. 595-27038. DATE AND SYSTEM DESIGNATIONS SHALL BE WHITE URETHANE PAINT.
8. THE PROPOSED GAS LINE TO BE CONSTRUCTED BY DOMINION ENERGY AND ATTACHED TO THE BRIDGE IS PART OF A SEPARATE PROJECT AND IS NOT SHOWN BECAUSE THE FINAL LOCATION WAS NOT ESTABLISHED AT THE TIME OF PLAN SUBMISSION.

DESIGN AGENCY
BURGESS & NIPLE
100 WEST ERIE STREET
PAINESVILLE, OHIO 44077

DESIGNED	DRAWN	REVIEWED	DATE
GJL	WTB	DWL	09/2021
CHECKED	REVISED	STRUCTURE FILE NUMBER	
MAB		1876083	

FRAMING PLAN AND BEAM ELEVATION
BRIDGE 00.42
OVER CUYAHOGA RIVER

CUY - OLD ROCKSIDE ROAD

P:\PR57030\Cadd\Sheets\ORR_91563_0042_SS001.dwg 13-Sep-21 11:34 AM

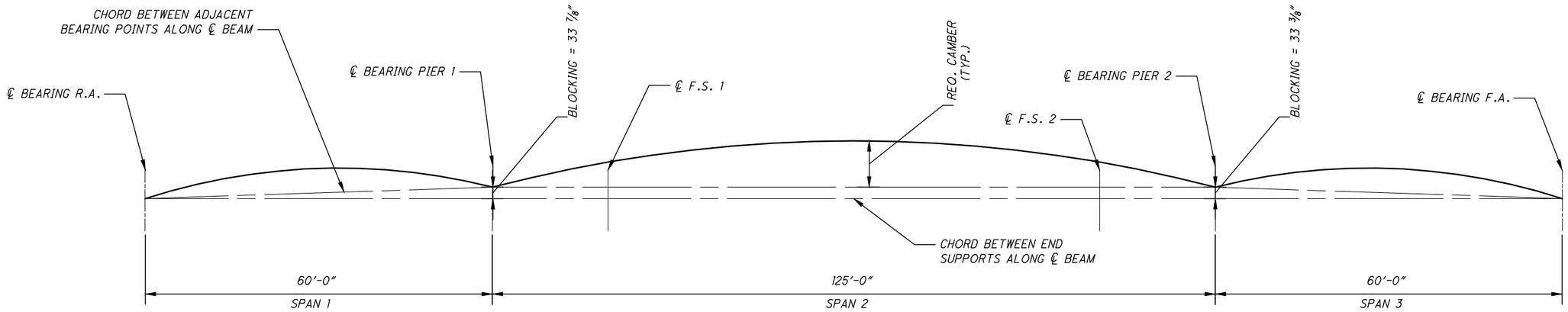

CAMBER AND BLOCKING DIAGRAM
(NOT TO SCALE)

DEFLECTION AND CAMBER TABLE (VALUES IN INCHES)

DESCRIPTION	BEAM 1																		
	REAR ABUTMENT	SPAN 1			PIER 1	SPAN 2									PIER 2	SPAN 3			FORWARD ABUTMENT
		1/4 SPAN	1/2 SPAN	3/4 SPAN		1/8 SPAN	F.S. 1	1/4 SPAN	3/8 SPAN	1/2 SPAN	5/8 SPAN	3/4 SPAN	F.S. 2	7/8 SPAN		1/4 SPAN	1/2 SPAN	3/4 SPAN	
DEFLECTION DUE TO WEIGHT OF STEEL (A)	0.00	-0.03	-0.07	-0.08	0.00	0.27	0.36	0.59	0.84	0.94	0.84	0.59	0.36	0.27	0.00	-0.08	-0.07	-0.03	0.00
DEFLECTION DUE TO REMAINING DEAD LOAD (B)	0.00	-0.11	-0.27	-0.33	0.00	1.10	1.47	2.38	3.36	3.77	3.36	2.38	1.47	1.10	0.00	-0.33	-0.27	-0.11	0.00
ADJUSTMENT FOR VERTICAL CURVATURE (C)	0.00	1.76	2.58	1.99	0.00	5.32	6.54	9.12	11.41	12.17	11.41	9.12	6.54	5.32	0.00	1.75	2.09	1.14	0.00
TOTAL CAMBER (A+B+C)	0.00	1.62	2.24	1.58	0.00	6.69	8.37	12.09	15.61	16.87	15.61	12.09	8.37	6.69	0.00	1.34	1.76	0.99	0.00

DEFLECTION AND CAMBER TABLE (VALUES IN INCHES)

DESCRIPTION	BEAM 2																		
	REAR ABUTMENT	SPAN 1			PIER 1	SPAN 2									PIER 2	SPAN 3			FORWARD ABUTMENT
		1/4 SPAN	1/2 SPAN	3/4 SPAN		1/8 SPAN	F.S. 1	1/4 SPAN	3/8 SPAN	1/2 SPAN	5/8 SPAN	3/4 SPAN	F.S. 2	7/8 SPAN		1/4 SPAN	1/2 SPAN	3/4 SPAN	
DEFLECTION DUE TO WEIGHT OF STEEL (A)	0.00	-0.03	-0.07	-0.09	0.00	0.28	0.38	0.61	0.87	0.98	0.87	0.61	0.38	0.28	0.00	-0.09	-0.07	-0.03	0.00
DEFLECTION DUE TO REMAINING DEAD LOAD (B)	0.00	-0.10	-0.23	-0.28	0.00	0.93	1.24	2.02	2.86	3.20	2.86	2.02	1.24	0.93	0.00	-0.28	-0.23	-0.10	0.00
ADJUSTMENT FOR VERTICAL CURVATURE (C)	0.00	1.76	2.58	1.99	0.00	5.32	6.54	9.12	11.41	12.17	11.41	9.12	6.54	5.32	0.00	1.75	2.09	1.14	0.00
TOTAL CAMBER (A+B+C)	0.00	1.63	2.27	1.62	0.00	6.53	8.16	11.75	15.13	16.34	15.13	11.75	8.16	6.53	0.00	1.38	1.79	1.00	0.00

NOTES:

1. POSITIVE CAMBER VALUES INDICATE CAMBER ABOVE CHORD BETWEEN ADJACENT BEARINGS. NEGATIVE CAMBER VALUES INDICATE CAMBER BELOW CHORD BETWEEN ADJACENT BEARINGS.
2. ALL CHORDS REFERENCED TO TOP OF WEB.
3. SEE SHEET 22/44 FOR BEAMS 3 TO 6 DEFLECTION AND CAMBER TABLES.

DESIGN AGENCY
BURGESS & NIPLE
100 WEST ERIE STREET
PAINESVILLE, OHIO 44077

DESIGNED	DRAWN	REVIEWED	DATE
BCS	WTB	DWL	09/2021
CHECKED	REVISED	STRUCTURE FILE NUMBER	
MAB		1876083	

CAMBER TABLE AND BLOCKING DIAGRAM 1 OF 2
BRIDGE 00.42
OVER CUYAHOGA RIVER

CUY - OLD
ROCKSIDE ROAD

21 / 44

119
157

P:\PR57030\Cadd\Sheets\ORR_91563_0042_SS004.dwg 13-Sep-21 11:34 AM

DESCRIPTION	REAR ABUTMENT	SPAN 1			PIER 1	SPAN 2									PIER 2	SPAN 3			FORWARD ABUTMENT
		1/4 SPAN	1/2 SPAN	3/4 SPAN		1/8 SPAN	F.S. 1	1/4 SPAN	3/8 SPAN	1/2 SPAN	5/8 SPAN	3/4 SPAN	F.S. 2	7/8 SPAN		1/4 SPAN	1/2 SPAN	3/4 SPAN	
DEFLECTION AND CAMBER TABLE (VALUES IN INCHES) — BEAMS 3 AND 4																			
DEFLECTION DUE TO WEIGHT OF STEEL (A)	0.00	-0.03	-0.07	-0.09	0.00	0.28	0.38	0.61	0.87	0.98	0.87	0.61	0.38	0.28	0.00	-0.09	-0.07	-0.03	0.00
DEFLECTION DUE TO REMAINING DEAD LOAD (B)	0.00	-0.09	-0.21	-0.25	0.00	0.80	1.07	1.74	2.47	2.77	2.47	1.74	1.07	0.80	0.00	-0.25	-0.21	-0.09	0.00
ADJUSTMENT FOR VERTICAL CURVATURE (C)	0.00	1.76	2.58	1.99	0.00	5.32	6.54	9.12	11.41	12.17	11.41	9.12	6.54	5.32	0.00	1.75	2.09	1.14	0.00
TOTAL CAMBER (A+B+C)	0.00	1.64	2.30	1.65	0.00	6.40	7.99	11.48	14.74	15.91	14.74	11.48	7.99	6.40	0.00	1.41	1.81	1.01	0.00

DESCRIPTION	REAR ABUTMENT	SPAN 1			PIER 1	SPAN 2									PIER 2	SPAN 3			FORWARD ABUTMENT
		1/4 SPAN	1/2 SPAN	3/4 SPAN		1/8 SPAN	F.S. 1	1/4 SPAN	3/8 SPAN	1/2 SPAN	5/8 SPAN	3/4 SPAN	F.S. 2	7/8 SPAN		1/4 SPAN	1/2 SPAN	3/4 SPAN	
DEFLECTION AND CAMBER TABLE (VALUES IN INCHES) — BEAM 5																			
DEFLECTION DUE TO WEIGHT OF STEEL (A)	0.00	-0.03	-0.07	-0.09	0.00	0.28	0.38	0.61	0.87	0.98	0.87	0.61	0.38	0.28	0.00	-0.09	-0.07	-0.03	0.00
DEFLECTION DUE TO REMAINING DEAD LOAD (B)	0.00	-0.11	-0.27	-0.33	0.00	1.10	1.47	2.38	3.36	3.77	3.36	2.38	1.47	1.10	0.00	-0.33	-0.27	-0.11	0.00
ADJUSTMENT FOR VERTICAL CURVATURE (C)	0.00	1.76	2.58	1.99	0.00	5.32	6.54	9.12	11.41	12.17	11.41	9.12	6.54	5.32	0.00	1.75	2.09	1.14	0.00
TOTAL CAMBER (A+B+C)	0.00	1.62	2.24	1.58	0.00	6.70	8.38	12.11	15.64	16.91	15.64	12.11	8.38	6.70	0.00	1.33	1.75	0.99	0.00

DESCRIPTION	REAR ABUTMENT	SPAN 1			PIER 1	SPAN 2									PIER 2	SPAN 3			FORWARD ABUTMENT
		1/4 SPAN	1/2 SPAN	3/4 SPAN		1/8 SPAN	F.S. 1	1/4 SPAN	3/8 SPAN	1/2 SPAN	5/8 SPAN	3/4 SPAN	F.S. 2	7/8 SPAN		1/4 SPAN	1/2 SPAN	3/4 SPAN	
DEFLECTION AND CAMBER TABLE (VALUES IN INCHES) — BEAM 6																			
DEFLECTION DUE TO WEIGHT OF STEEL (A)	0.00	-0.03	-0.07	-0.08	0.00	0.27	0.36	0.59	0.84	0.94	0.84	0.59	0.36	0.27	0.00	-0.08	-0.07	-0.03	0.00
DEFLECTION DUE TO REMAINING DEAD LOAD (B)	0.00	-0.15	-0.35	-0.43	0.00	1.50	2.01	3.24	4.58	5.13	4.32	3.24	2.01	1.50	0.00	-0.43	-0.35	-0.15	0.00
ADJUSTMENT FOR VERTICAL CURVATURE (C)	0.00	1.76	2.58	1.99	0.00	5.32	6.54	9.12	11.41	12.17	11.41	9.12	6.54	5.32	0.00	1.75	2.09	1.14	0.00
TOTAL CAMBER (A+B+C)	0.00	1.59	2.16	1.47	0.00	7.09	8.91	12.96	16.82	18.23	16.56	12.96	8.91	7.09	0.00	1.23	1.68	0.96	0.00

NOTES:

1. SEE SHEET 21/44 FOR CAMBER AND BLOCKING DIAGRAM AND NOTES.

DESIGN AGENCY
BURGESS & NIPLE
100 WEST ERIE STREET
PAINESVILLE, OHIO 44077

DESIGNED BCS | CHECKED MAB
DRAWN WTB | REVISED
REVIEWED DWL | DATE 09/2021
STRUCTURE FILE NUMBER 1876083

CAMBER TABLE AND BLOCKING DIAGRAM 2 OF 2
BRIDGE 00.42
OVER CUYAHOGA RIVER

CUY - OLD ROCKSIDE ROAD

22/44
120/157

P:\PR57030\Cadd\Sheets\ORR_91563_0042_SS005.dwg 13-Sep-21 11:34 AM

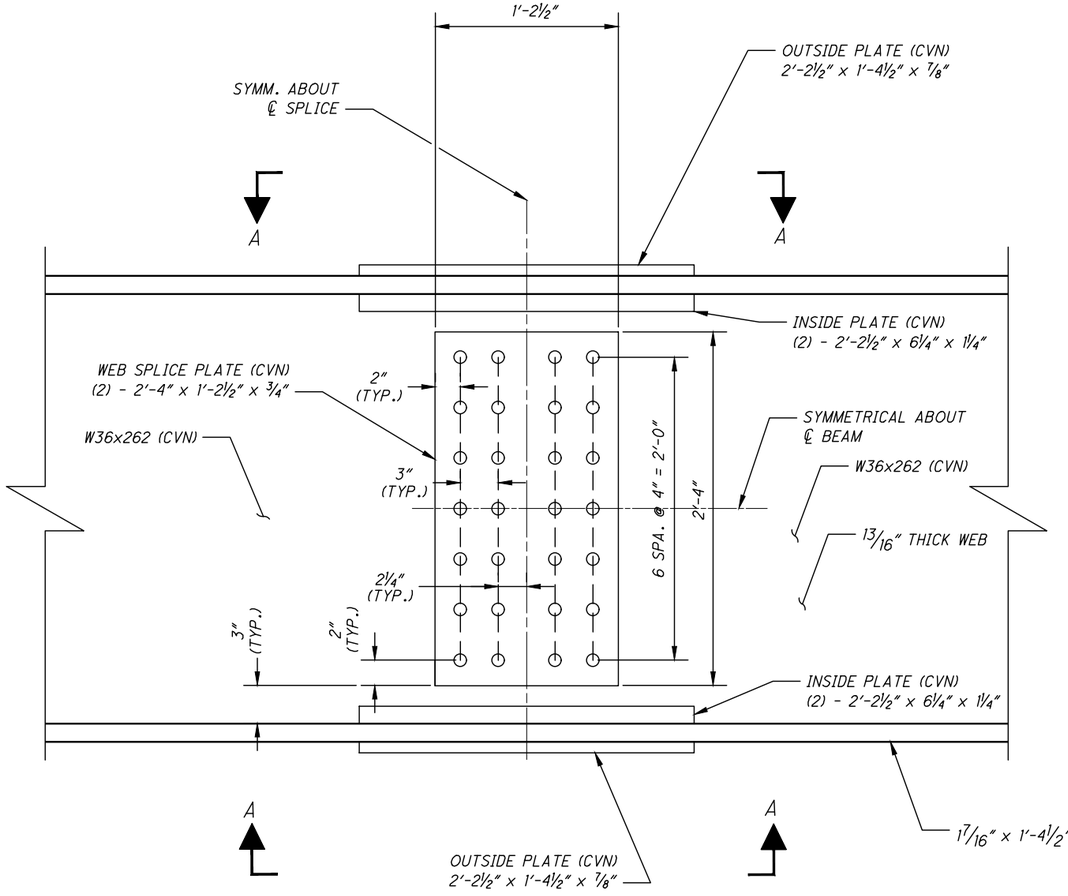

FIELD SPLICE DETAIL

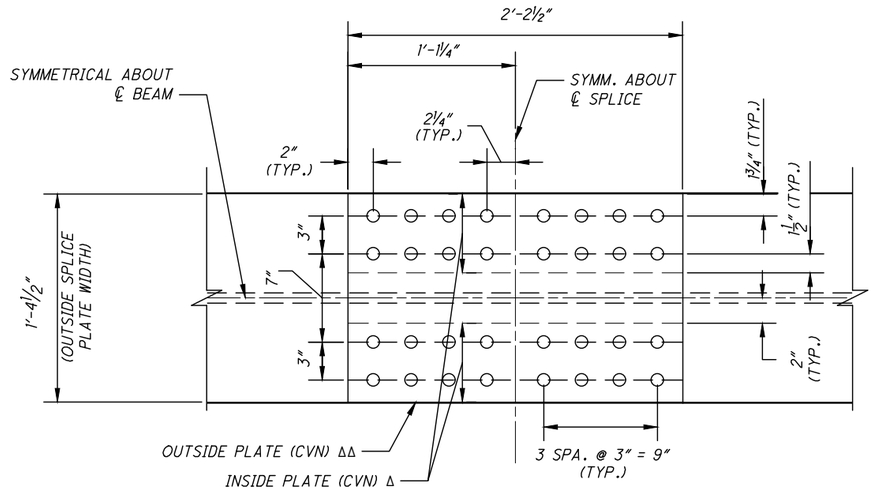

VIEW A-A

Δ = 2'-2½" x 6¼" x 1¼" (TOP AND BOTTOM FLANGE)

ΔΔ = 2'-2½" x 1'-4½" x ⅞" (TOP AND BOTTOM FLANGE)

NOTES:

1. ALL STRUCTURAL STEEL SHALL BE ASTM A709 GRADE 50W.
2. WHERE A SHAPE OR PLATE IS DESIGNATED (CVN), FURNISH MATERIAL THAT MEETS THE MINIMUM NOTCH TOUGHNESS REQUIREMENTS AS SPECIFIED IN ODOT CMS 711.01.
3. HIGH STRENGTH BOLTS SHALL BE 1" DIAMETER.
4. ALL BOLTS, NUTS, AND WASHERS SHALL BE ASTM F3125 GRADE A325, TYPE I GALVANIZED.
5. BOLTS SHALL BE TIGHTENED TO MEET THE REQUIRED BOLT TENSION OF 51 KIPS PER ODOT CMS TABLE 513.20-2. BOLTS SHALL BE TIGHTENED BY THE TURN-OF-NUT METHOD PER ODOT CMS TABLE 513.20-3 AND AS DESCRIBED IN SECTION 513.20 D.
6. BOLTS SHALL BE INSPECTED PER ODOT CMS SECTION 513.20 E.
7. SPLICE PLATES HAVE BEEN DESIGNED FOR BOLT THREADS TO BE EXCLUDED IN THE SHEAR PLANE AT ALL CONNECTIONS.

DESIGN AGENCY
BURGESS & NIPLE
100 WEST ERIE STREET
PAINESVILLE, OHIO 44077

DESIGNED	DRAWN	REVIEWED	DATE
BCS	WTB	DWL	09/2021
CHECKED	REVISED	STRUCTURE FILE NUMBER	
MAB		1876083	

BEAM SPLICE DETAILS
BRIDGE 00.42
OVER CUYAHOGA RIVER

CUY - OLD ROCKSIDE ROAD

23 / 44

121 / 157

P:\PR57030\Cadd\Sheets\ORR_91563_0042_SS008.dwg 13-Sep-21 11:35 AM

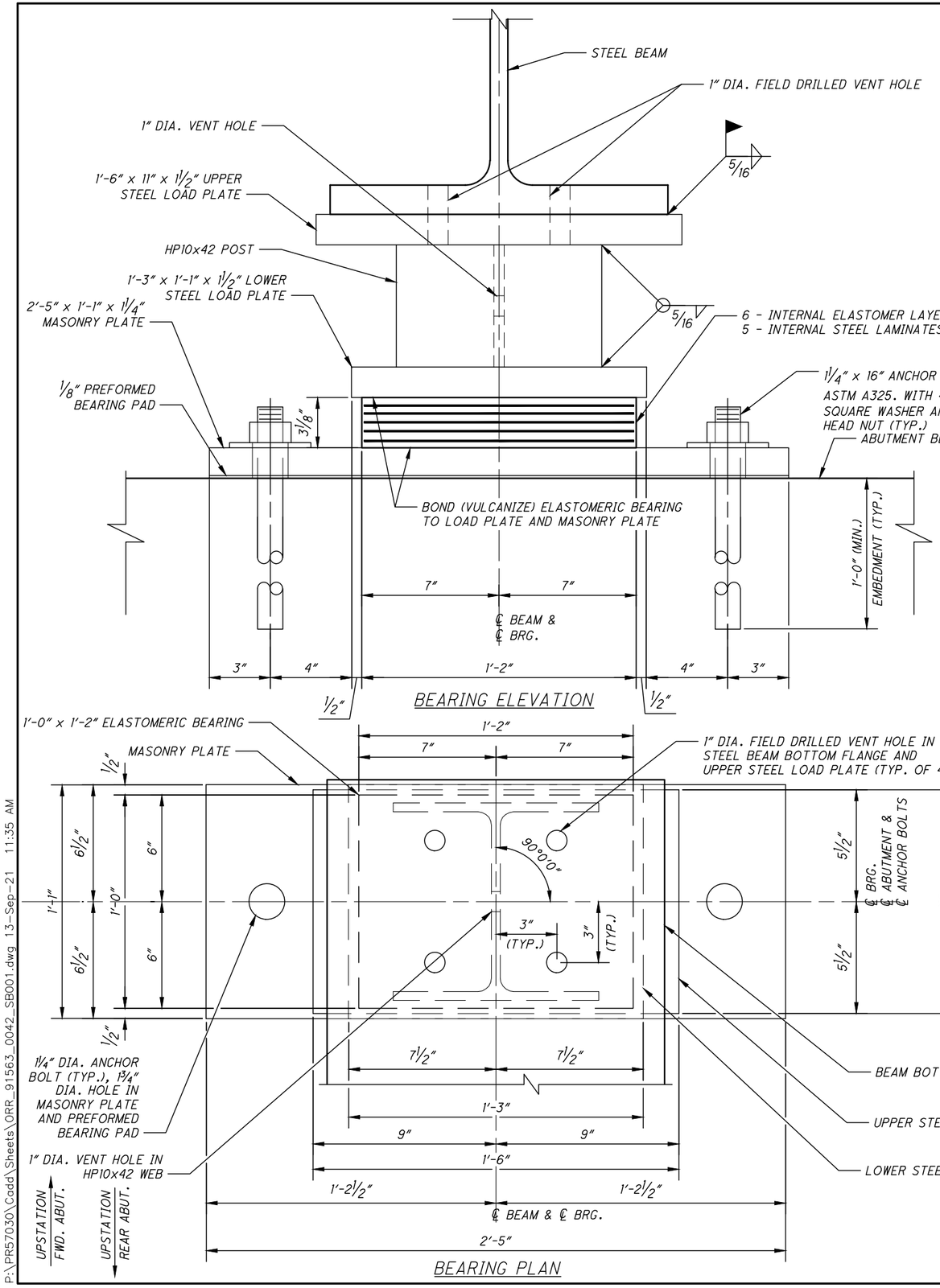

BEARING ELEVATION

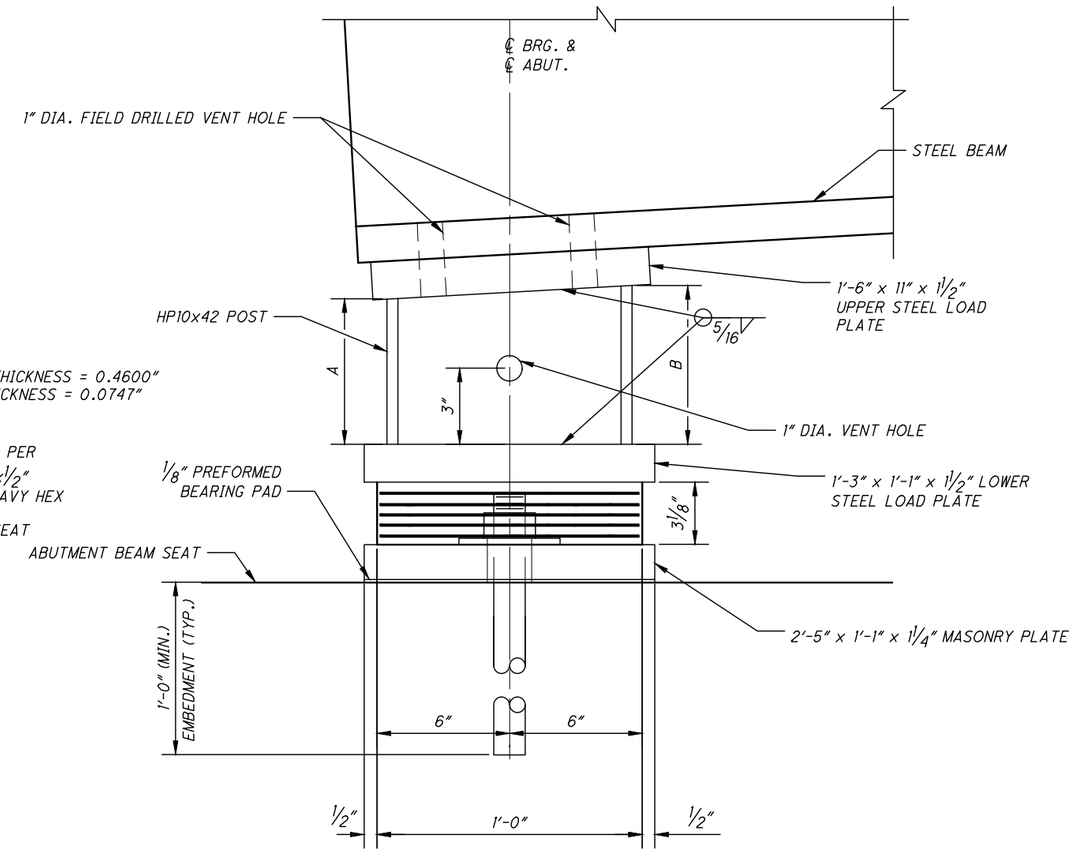

BEARING SIDE ELEVATION

(REAR ABUTMENT SHOWN, FORWARD ABUTMENT OPPOSITE HAND)

BEARING PLAN

ELASTOMERIC BEARING DATA							
LOCATION	TYPE	NO. REQ'D.	REACTION (KIPS)		DESIGN LOAD (KIPS)	A	B
			DL	LL**			
REAR ABUT.	EXP.	6	57	81	138	5¾"	6¼"
FWD. ABUT.	EXP.	6	57	81	138	6¼"	5¾"

LEGEND:

** = LIVE LOAD WITHOUT IMPACT

NOTES:

1. EACH BEARING ASSEMBLY SHALL BE SHOP MARKED WITH THE FOLLOWING INFORMATION; TOP, UPSTATION DIRECTION, LOCATION, AND BEAM NUMBER. ALL MARKS SHALL BE PERMANENT AND BE VISIBLE AFTER THE BEARING IS INSTALLED.
2. UPPER AND LOWER STEEL LOAD PLATES, MASONRY PLATE, AND HP POSTS SHALL BE ASTM A709 GRADE 50 STEEL. THE LOWER STEEL LOAD PLATES AND MASONRY PLATES SHALL BE BONDED BY VULCANIZATION TO THE ELASTOMER DURING THE MOLDING PROCESS.
3. ELASTOMERIC BEARINGS: THE ELASTOMER SHALL HAVE A HARDNESS OF 50 DUROMETER. THE BEARINGS WERE DESIGNED IN ACCORDANCE WITH SECTION 14.7.6 (METHOD A) OF THE AASHTO LRFD BRIDGE DESIGN SPECIFICATIONS. THE LONG-TERM COMPRESSION PROOF LOAD TEST (AASHTO STANDARD SPECIFICATIONS FOR HIGHWAY BRIDGES, DIVISION II, SECTION 18.7.2.6) IS NOT REQUIRED.
4. BASIS OF PAYMENT: THE UNIT BID PRICE SHALL INCLUDE ALL MATERIALS, LABOR, AND INCIDENTALS NECESSARY TO FURNISH AND INSTALL LAMINATED ELASTOMERIC BEARINGS, INCLUDING LOAD PLATES, MASONRY PLATES, HP POSTS, ANCHOR BOLTS, AND MISC. HARDWARE. PAYMENT WILL BE AT THE UNIT PRICE FOR ITEM 516, EACH, ELASTOMERIC BEARING WITH INTERNAL LAMINATES AND LOAD PLATE (NEOPRENE), AS PER PLAN.
5. DOWEL ANCHOR BOLTS INTO CONCRETE PER ITEM 510 - DOWEL HOLES WITH NONSHRINK, NONMETALLIC EPOXY GROUT, AS PER PLAN.
6. SEE SHEET 17/44 FOR ANCHOR BOLT LAYOUT.

P:\PR57030\Cadd\Sheets\ORR_91563_0042_SB001.dwg 13-Sep-21 11:35 AM

DESIGN AGENCY
BURGESS & NIPLE
100 WEST ERIE STREET
PAINESVILLE, OHIO 44077

DESIGNED	DRAWN	REVIEWED	DATE
BCS	BCS	DWL	09/2021
CHECKED	REVISED	STRUCTURE FILE NUMBER	
SJA		1876083	

ABUTMENT BEARING DETAILS

BRIDGE 00.42
OVER CUYAHOGA RIVER

CUY - OLD ROCKSIDE ROAD

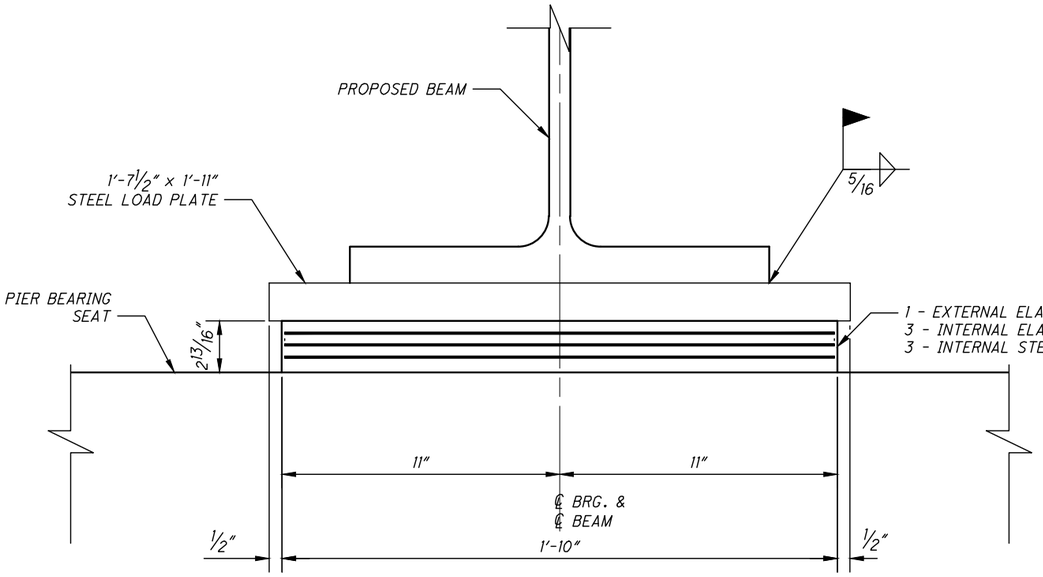

BEARING ELEVATION

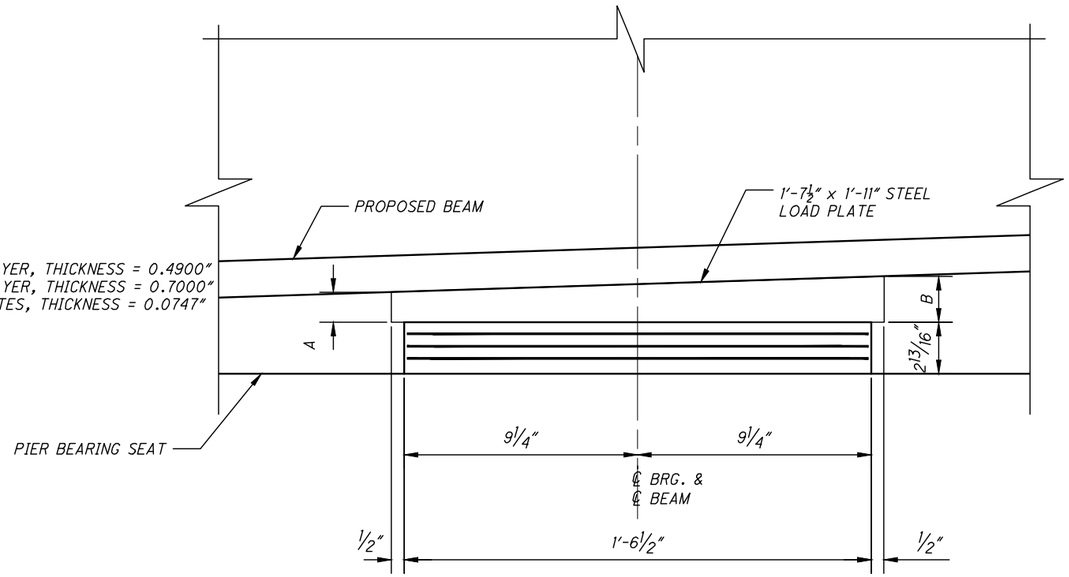

BEARING SIDE ELEVATION

(PIER 1 SHOWN, PIER 2 OPPOSITE HAND)

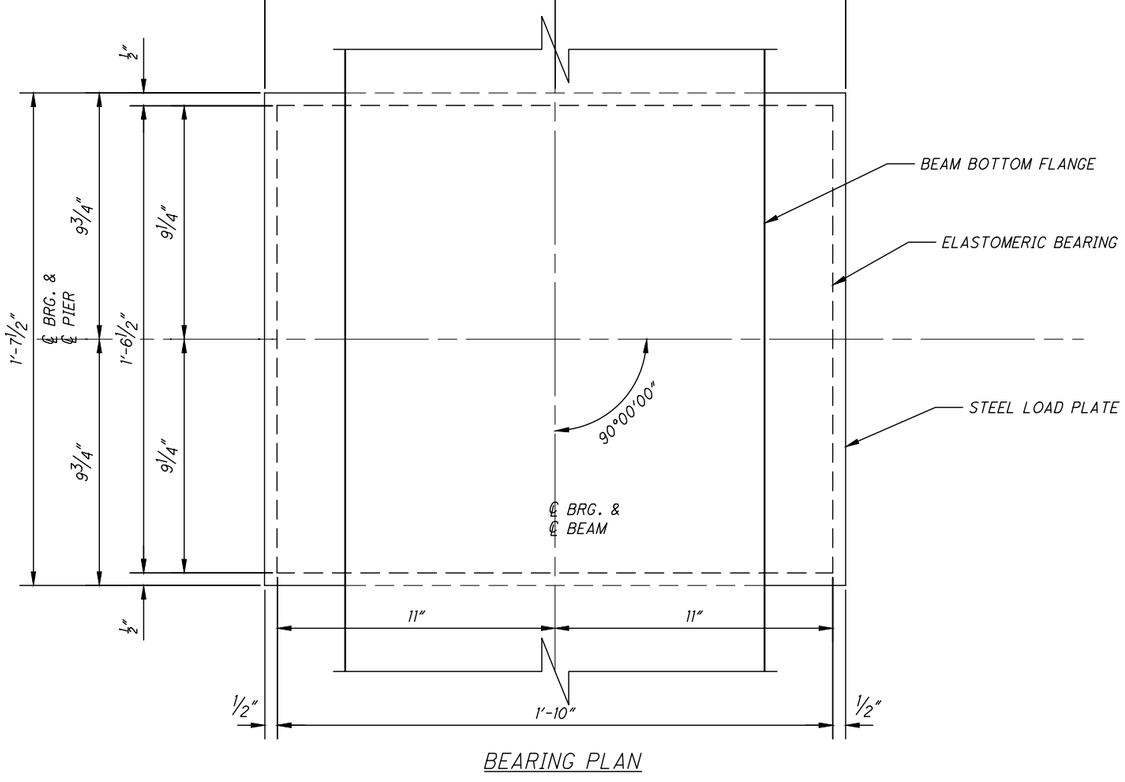

BEARING PLAN

ELASTOMERIC BEARING DATA							
LOCATION	TYPE	NO. REQ'D.	REACTION (KIPS)		DESIGN LOAD (KIPS)	A	B
			DL	LL**			
PIER 1	EXP.	6	190	155	345	1 3/16"	1 13/16"
PIER 2	EXP.	6	190	155	345	1 13/16"	1 3/16"

LEGEND:

** = LIVE LOAD WITHOUT IMPACT

NOTES:

1. EACH BEARING ASSEMBLY SHALL BE SHOP MARKED WITH THE FOLLOWING INFORMATION; TOP, UPSTATION DIRECTION, LOCATION, AND BEAM NUMBER. ALL MARKS SHALL BE PERMANENT AND BE VISIBLE AFTER THE BEARING IS INSTALLED.
2. STEEL LOAD PLATES SHALL BE ASTM A709 GRADE 50 STEEL. THE STEEL LOAD PLATES SHALL BE BONDED BY VULCANIZATION TO THE ELASTOMER DURING THE MOLDING PROCESS.
3. ELASTOMERIC BEARINGS: THE ELASTOMER SHALL HAVE A HARDNESS OF 50 DUROMETER. THE BEARINGS WERE DESIGNED IN ACCORDANCE WITH SECTION 14.7.6 (METHOD A) OF THE AASHTO LRFD BRIDGE DESIGN SPECIFICATIONS. THE LONG-TERM COMPRESSION PROOF LOAD TEST (AASHTO STANDARD SPECIFICATIONS FOR HIGHWAY BRIDGES, DIVISION II, SECTION 18.7.2.6) IS NOT REQUIRED.
4. BASIS OF PAYMENT: THE UNIT BID PRICE SHALL INCLUDE ALL MATERIALS, LABOR, AND INCIDENTALS NECESSARY TO FURNISH AND INSTALL LAMINATED ELASTOMERIC BEARINGS, INCLUDING LOAD PLATES AND MISC. HARDWARE. PAYMENT WILL BE AT THE UNIT PRICE FOR ITEM 516, EACH, ELASTOMERIC BEARING WITH INTERNAL LAMINATES AND LOAD PLATE (NEOPRENE), AS PER PLAN.

DESIGN AGENCY
BURGESS & NIPLE
100 WEST ERIE STREET
PAINESVILLE, OHIO 44077

DESIGNED	DRAWN	REVIEWED	DATE
BCS	BCS	DWL	09/2021
CHECKED	REVISED	STRUCTURE FILE NUMBER	
SJA		1876083	

PIER BEARING DETAILS
BRIDGE 00.42
OVER CUYAHOGA RIVER

CUY - OLD ROCKSIDE ROAD

P:\PR57030\Cadd\Sheets\ORR_91563_0042_SB002.dwg 13-Sep-21 11:35 AM

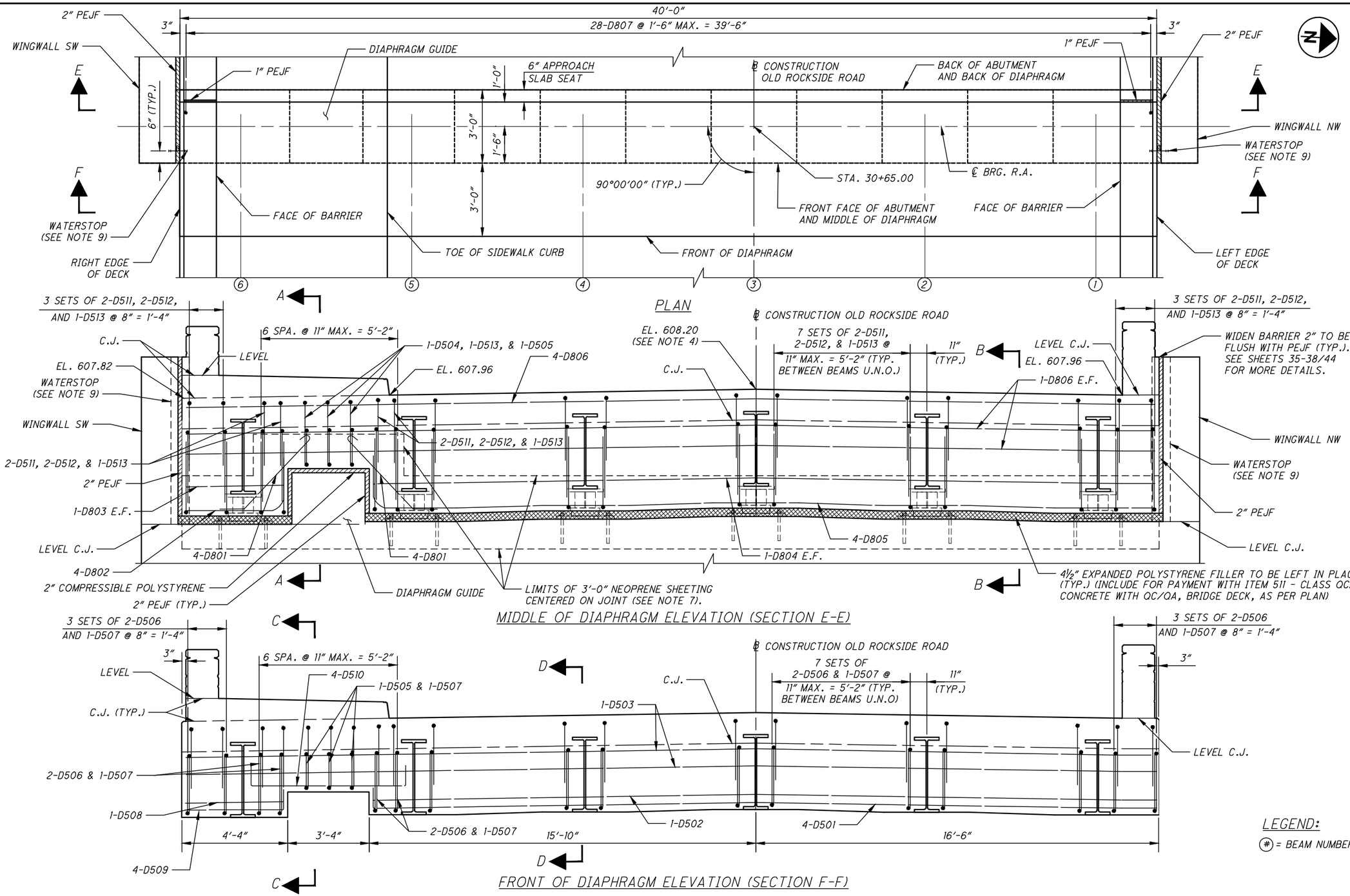

NOTES:

1. CONSTRUCT DIAPHRAGM PRIOR TO CONSTRUCTING WINGWALLS.
2. SEE ODOT STANDARD BRIDGE DRAWINGS SICD-1-96 AND SICD-2-14 FOR DETAILS NOT SHOWN.
3. SEE SHEET 27/44 FOR SECTIONS A-A, B-B, C-C, AND D-D.
4. SEE SECTION B-B FOR ELEVATION LOCATION.
5. THE PROPOSED GAS LINE TO BE CONSTRUCTED BY DOMINION ENERGY AND ATTACHED TO THE BRIDGE IS PART OF A SEPARATE PROJECT AND IS NOT SHOWN BECAUSE THE FINAL LOCATION WAS NOT ESTABLISHED AT THE TIME OF PLAN SUBMISSION.
6. ABUTMENT DIAPHRAGM CONCRETE: PLACE THE DIAPHRAGM CONCRETE ENCASING THE STRUCTURAL MEMBER ENDS AT LEAST 48 HOURS BEFORE PLACEMENT OF THE DECK CONCRETE TO PREVENT UPLIFT DURING DECK PLACEMENT. LOCATE A HORIZONTAL CONSTRUCTION JOINT IN THE DIAPHRAGM AS SHOWN IN SICD-1-96 AND PLACE REMAINING CONCRETE WITH THE DECK.
7. PAYMENT FOR NEOPRENE SHEETING WILL BE INCLUDED WITH ITEM 516 - SEMI-INTEGRAL ABUTMENT EXPANSION JOINT SEAL.
8. ALL ABUTMENT DIAPHRAGM CONCRETE SHALL BE ITEM 511 - CLASS QC2 CONCRETE WITH QC/QA, BRIDGE DECK, AS PER PLAN.
9. WATERSTOP EMBEDDED IN WINGWALL AND PARAPET/SEMI-INTEGRAL DIAPHRAGM FROM THE ABUTMENT SEAT TO TOP OF WINGWALL. CUT WATERSTOP AS NECESSARY TO ACCOMMODATE REBAR. PRODUCT SHALL BE RIBBED TEAR WEB 700 BY SIKA GREENSTREAK OR APPROVED EQUAL 9" LONG PVC RIBBED TEAR WEB WATERSTOP CAPABLE OF ACCOMMODATING 1 3/8" MOVEMENT IN EACH DIRECTION. CONTRACTOR MAY SPLIT WATERSTOP TO ACCOMMODATE SEPARATE POURS, BUT SHALL WELD SPLICE THE WATERSTOP TO PROVIDE A CONTINUOUS STRIP FOR THE FINAL CONDITION. THE COST OF FURNISHING AND INSTALLING THE WATERSTOP IS INCLUDED IN THE UNIT PRICE BID FOR ITEM 511 - CLASS QC1 CONCRETE WITH QC/QA, ABUTMENT INCLUDING FOOTING, AS PER PLAN.

DESIGN AGENCY
BURGESS & NIPLE
100 WEST ERIE STREET
PAINESVILLE, OHIO 44077

DESIGNED	DRAWN	REVIEWED	DATE
GJL	WTB	DWL	09/2021
CHECKED	REVISED	STRUCTURE FILE NUMBER	
BCS		1876083	

REAR DIAPHRAGM PLAN AND ELEVATIONS
BRIDGE 00.42
OVER CUYAHOGA RIVER

CUY - OLD ROCKSIDE ROAD

26 / 44

124 / 157

P:\PR57030\Cadd\Sheets\ORR_91563_0042_SS002.dwg 13-Sep-21 11:36 AM

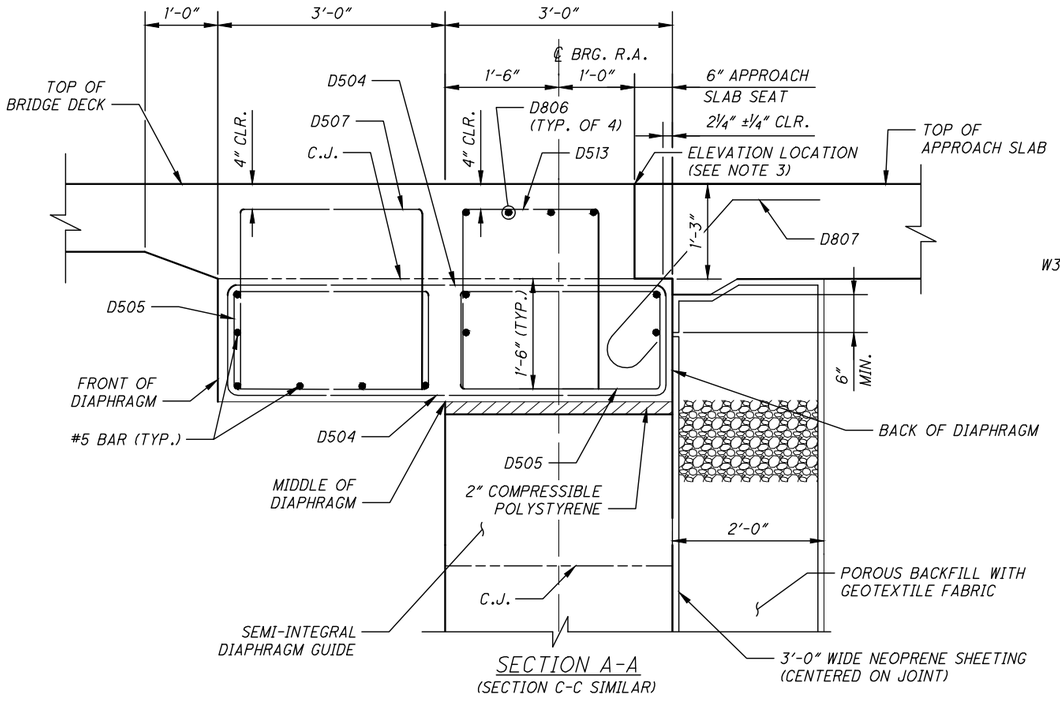

SECTION A-A
(SECTION C-C SIMILAR)

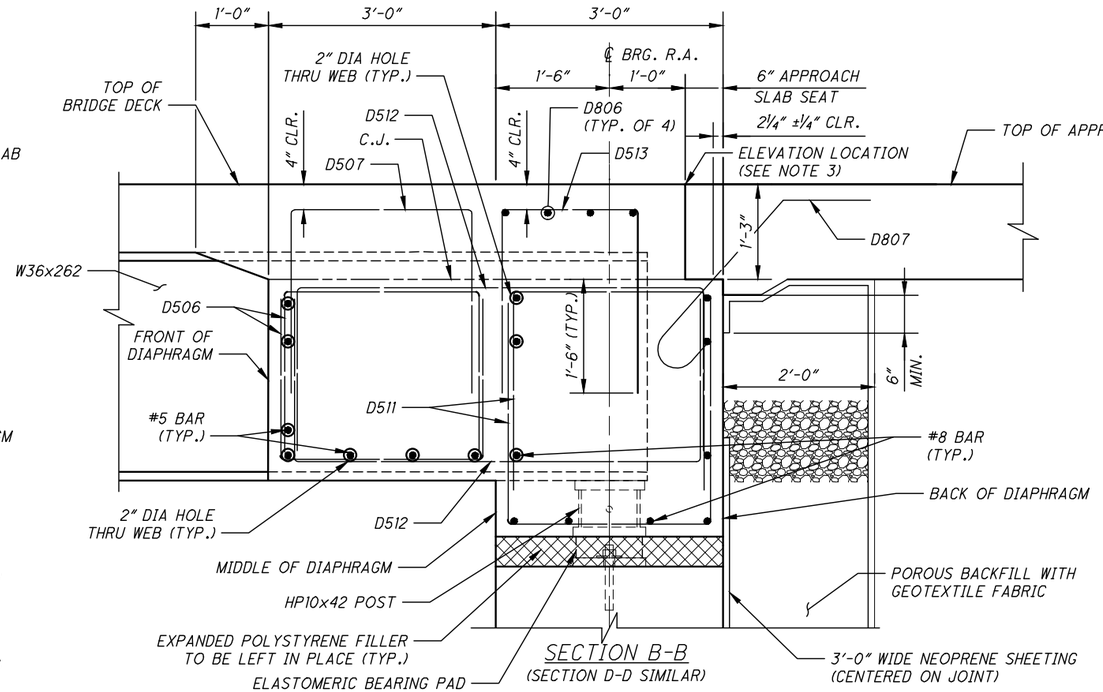

SECTION B-B
(SECTION D-D SIMILAR)

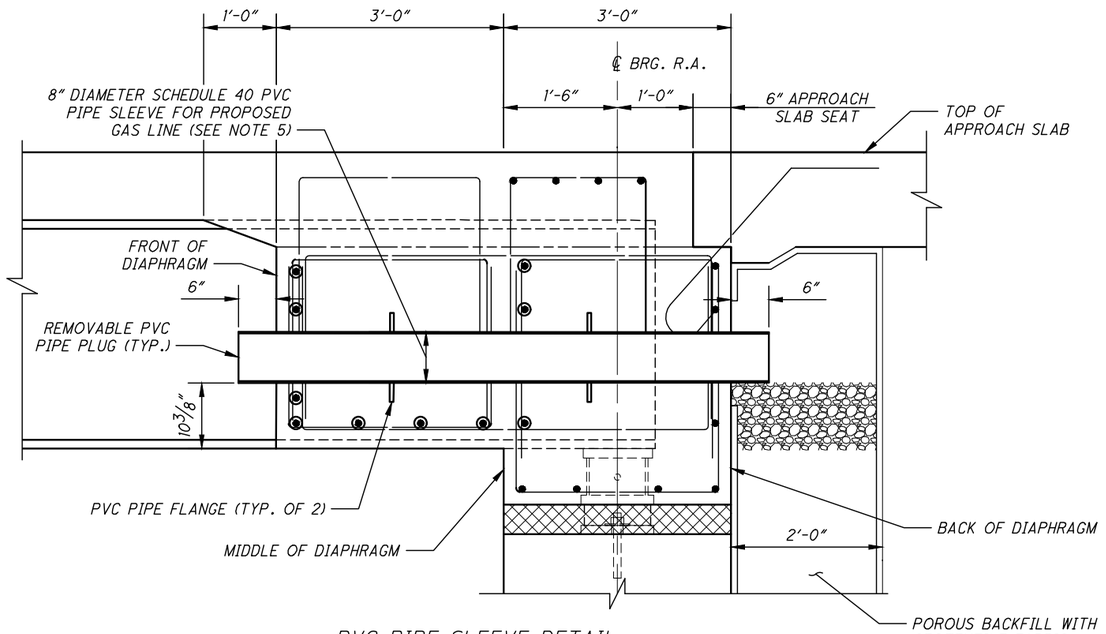

PVC PIPE SLEEVE DETAIL
(SEE NOTE 5)

NOTES:

1. PROVIDE TYPE A WATERPROOFING FROM TOP OF FOOTING TO BOTTOM OF APPROACH SLAB.
2. SEE SHEET 26/44 FOR LOCATION OF SECTIONS A-A, B-B, C-C, AND D-D.
3. TOP ELEVATIONS ON SHEET 26/44 ARE TAKEN AT THIS POINT.
4. DECK BARS ARE NOT SHOWN FOR CLARITY.
5. 8" NOMINAL DIAMETER PVC PIPE SLEEVE SHALL BE INSTALLED THROUGH THE SEMI-INTEGRAL DIAPHRAGM FOR THE PROPOSED DOMINION ENERGY GAS LINE. DOMINION ENERGY'S PROPOSED GAS LINE SHALL BE INSTALLED AND ATTACHED TO THE BRIDGE AS A SEPARATE PROJECT AND IS NOT INCLUDED IN THIS PROJECT. PVC PIPE SLEEVE SHALL BE FURNISHED PER ODOT CMS 707.45. THE FINAL LOCATION OF THE PVC PIPE SLEEVE, SHALL BE COORDINATED WITH AND APPROVED BY DOMINION ENERGYAND THE PROJECT ENGINEER PRIOR TO INSTALLATION. PAYMENT SHALL BE MADE AT THE LUMP SUM PRICE BID FOR ITEM SPECIAL - STRUCTURES: PROPOSED GAS LINE PIPE SLEEVES. THIS SHALL INCLUDE ALL NECESSARY TOOLS, LABOR, EQUIPMENT, MATERIALS, INCIDENTALS, AND COORDINATION WITH DOMINION ENERGY NECESSARY TO SUCCESSFULLY PERFORM THIS ITEM OF WORK.

DESIGN AGENCY
BURGESS & NIPLE
100 WEST ERIE STREET
PAINESVILLE, OHIO 44077

DESIGNED	DRAWN	REVIEWED	DATE
MAB	WTB	DWL	09/2021
CHECKED	REVISED	STRUCTURE FILE NUMBER	
BCS		1876083	

REAR DIAPHRAGM DETAILS
BRIDGE 00.42
OVER CUYAHOGA RIVER

CUY - OLD ROCKSIDE ROAD

27 / 44

125
157

P:\PR57030\Cadd\Sheets\ORR_91563_0042_SS010.dwg 13-Sep-21 11:36 AM

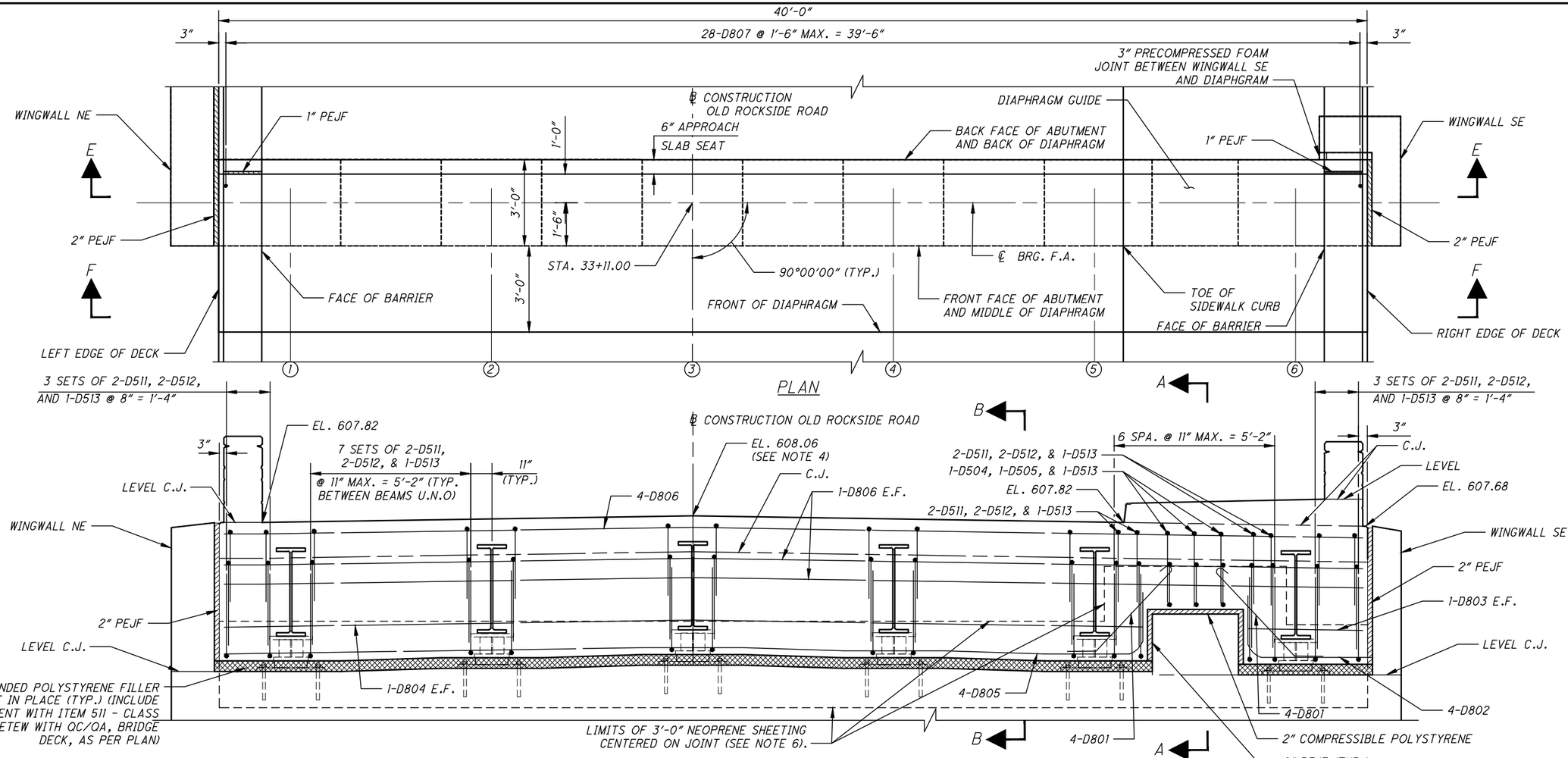

NOTES:

1. CONSTRUCT DIAPHRAGM PRIOR TO CONSTRUCTING WINGWALLS.
2. SEE ODOT STANDARD BRIDGE DRAWINGS SICD-1-96 AND SICD-2-14 FOR DETAILS NOT SHOWN.
3. SEE SHEET 29/44 FOR SECTIONS A-A, B-B, C-C, AND D-D.
4. SEE SECTION B-B FOR ELEVATION LOCATION.
5. ABUTMENT DIAPHRAGM CONCRETE: PLACE THE DIAPHRAGM CONCRETE ENCASING THE STRUCTURAL MEMBER ENDS AT LEAST 48 HOURS BEFORE PLACEMENT OF THE DECK CONCRETE TO PREVENT UPLIFT DURING DECK PLACEMENT. LOCATE A HORIZONTAL CONSTRUCTION JOINT IN THE DIAPHRAGM AS SHOWN ON SICD-1-96 AND PLACE REMAINING CONCRETE WITH THE DECK.
6. PAYMENT FOR NEOPRENE SHEETING WILL BE INCLUDED WITH ITEM 516 - SEMI-INTEGRAL EXPANSION JOINT SEAL.
7. ALL ABUTMENT DIAPHRAGM CONCRETE SHALL BE ITEM 511 - CLASS QC2 CONCRETE WITH QC/QA, BRIDGE DECK, AS PER PLAN.
8. THE PROPOSED GAS LINE TO BE CONSTRUCTED BY DOMINION ENERGY AND ATTACHED TO THE BRIDGE IS PART OF A SEPARATE PROJECT AND IS NOT SHOWN BECAUSE THE FINAL LOCATION WAS NOT ESTABLISHED AT THE TIME OF PLAN SUBMISSION.

DESIGN AGENCY
BURGESS & NIPLE
100 WEST ERIE STREET
PAINESVILLE, OHIO 44077

DESIGNED	DRAWN	REVIEWED	DATE
GJL	WTB	DWL	09/2021
CHECKED	REVISED	STRUCTURE FILE NUMBER	
BCS		1876083	

FORWARD DIAPHRAGM PLAN AND ELEVATIONS

BRIDGE 00.42
OVER CUYAHOGA RIVER

CUY - OLD ROCKSIDE ROAD

P:\PR57030\Cadd\Sheets\ORR_91563_0042_SS003.dwg 13-Sep-21 11:36 AM

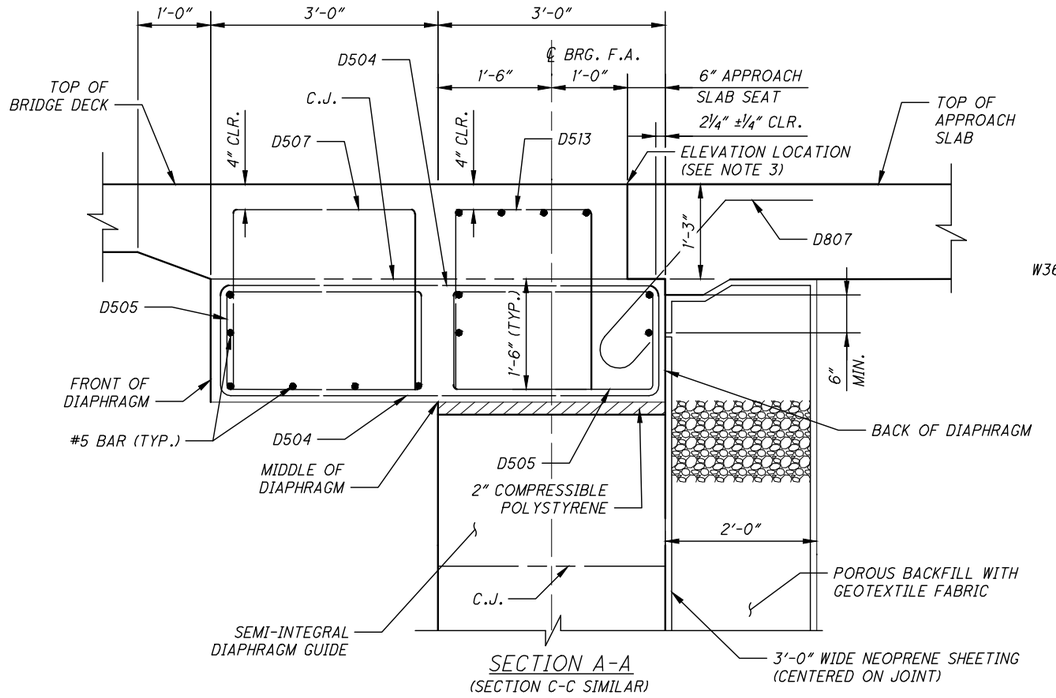

SECTION A-A
(SECTION C-C SIMILAR)

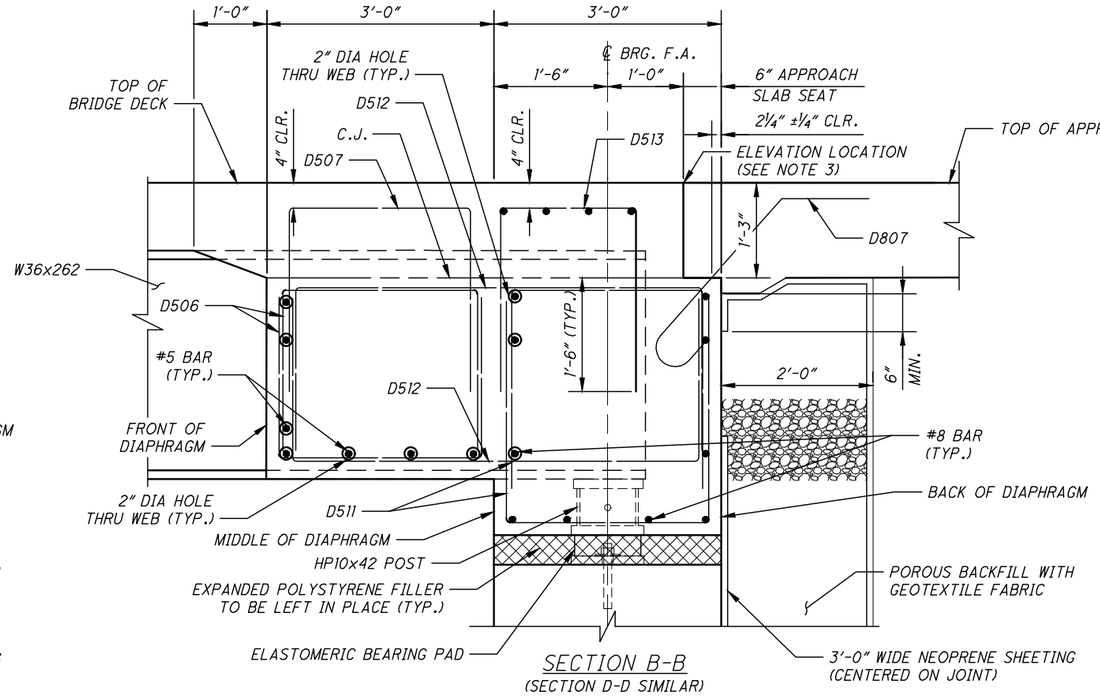

SECTION B-B
(SECTION D-D SIMILAR)

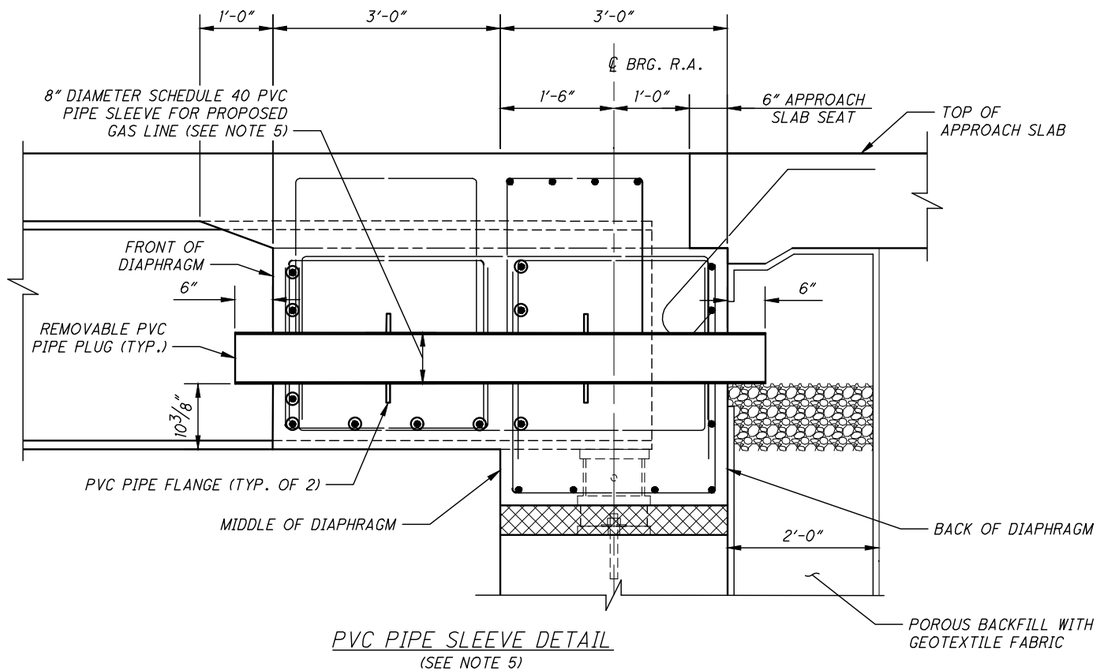

PVC PIPE SLEEVE DETAIL
(SEE NOTE 5)

NOTES:

1. PROVIDE TYPE A WATERPROOFING FROM TOP OF FOOTING TO BOTTOM OF APPROACH SLAB.
2. SEE SHEET 28/44 FOR LOCATION OF SECTIONS A-A, B-B, C-C, AND D-D.
3. TOP ELEVATIONS ON SHEET 28/44 ARE TAKEN AT THIS POINT.
4. DECK BARS ARE NOT SHOWN FOR CLARITY.
5. 8" NOMINAL DIAMETER PVC PIPE SLEEVE SHALL BE INSTALLED THROUGH THE SEMI-INTEGRAL DIAPHRAGM FOR THE PROPOSED DOMINION ENERGY GAS LINE. DOMINION ENERGY'S PROPOSED GAS LINE SHALL BE INSTALLED AND ATTACHED TO THE BRIDGE AS A SEPARATE PROJECT AND IS NOT INCLUDED IN THIS PROJECT. PVC PIPE SLEEVE SHALL BE FURNISHED PER ODOT CMS 707.45. THE FINAL LOCATION OF THE PVC PIPE SLEEVE, SHALL BE COORDINATED WITH AND APPROVED BY DOMINION ENERGY AND THE PROJECT ENGINEER PRIOR TO INSTALLATION. PAYMENT SHALL BE MADE AT THE LUMP SUM PRICE BID FOR ITEM SPECIAL - STRUCTURES: PROPOSED GAS LINE PIPE SLEEVES. THIS SHALL INCLUDE ALL NECESSARY TOOLS, LABOR, EQUIPMENT, MATERIALS, INCIDENTALS, AND COORDINATION WITH DOMINION ENERGY NECESSARY TO SUCCESSFULLY PERFORM THIS ITEM OF WORK.

DESIGN AGENCY
BURGESS & NIPLE
100 WEST ERIE STREET
PAINESVILLE, OHIO 44077

DESIGNED	DRAWN	REVIEWED	DATE
MAB	WTB	DWL	09/2021
CHECKED	REVISED	STRUCTURE FILE NUMBER	
BCS		1876083	

FORWARD DIAPHRAGM DETAILS
BRIDGE 00.42
OVER CUYAHOGA RIVER

CUY - OLD ROCKSIDE ROAD

P:\PR57030\Cadd\Sheets\ORR_91563_0042_SS011.dwg 13-Sep-21 11:37 AM

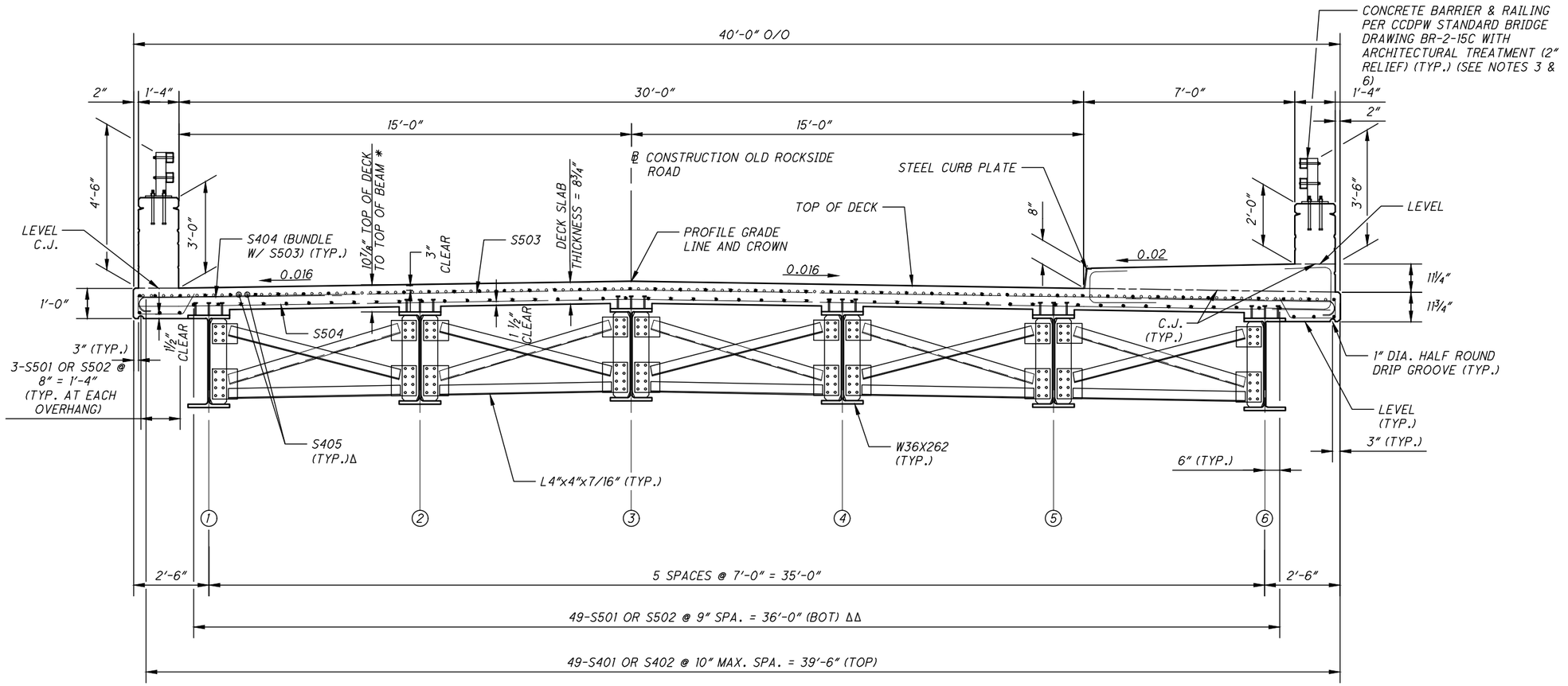

TRANSVERSE SECTION

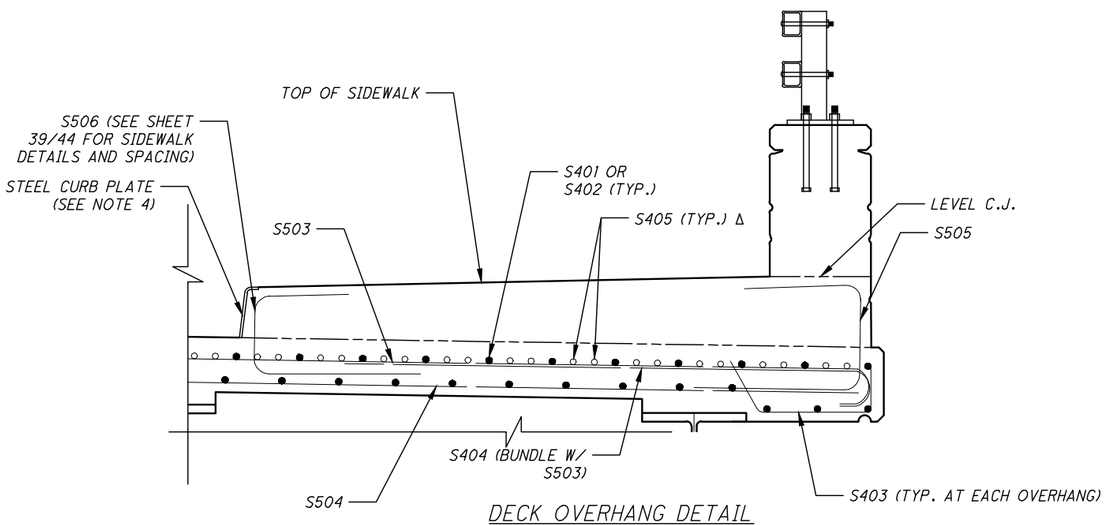

DECK OVERHANG DETAIL

(SIDEWALK REINFORCING NOT SHOWN)
(SEE SHEET 39/44 FOR SIDEWALK DETAILS)

LEGEND:

* = MEASURED AT CENTERLINE OF BEAM

Δ = PLACE TWO BARS AT EQ. SPA. BETWEEN S401 BARS (OVER PIERS ONLY)

ΔΔ = ADJUST BAR SPACING AS NEEDED TO CLEAR SHEAR STUDS

NOTES:

1. THE ESTIMATED QUANTITY OF DECK SLAB CONCRETE IS BASED ON THE CONSTANT DECK SLAB THICKNESS, AS SHOWN, PLUS THE QUANTITY OF CONCRETE THAT FORMS EACH BEAM HAUNCH. THE ESTIMATE ASSUMES A CONSTANT HAUNCH THICKNESS OF 3 9/16 INCHES AND A HAUNCH WIDTH EQUAL TO THE TOP FLANGE WIDTH. DEVIATE FROM THIS HAUNCH THICKNESS AS NECESSARY TO PLACE THE DECK SURFACE AT THE FINISHED GRADE.
2. THE HAUNCH THICKNESS WAS MEASURED AT THE CENTERLINE OF THE BEAM, FROM THE SURFACE OF THE DECK TO THE BOTTOM OF THE TOP FLANGE MINUS THE DECK SLAB THICKNESS. THE AREA OF ALL EMBEDDED STEEL PLATES HAS BEEN DEDUCTED FROM THE HAUNCH QUANTITY IN ACCORDANCE WITH 511.23.
3. SEE ODOT STANDARD BRIDGE DRAWING BR-2-15, CUYAHOGA COUNTY DEPARTMENT OF PUBLIC WORKS CONSTRUCTION DRAWINGS BR-2-15C AND PRF-1C, AND SHEETS 35/44, 36/44, 37/44, AND 38/44 FOR RAILING AND BARRIER DETAILS.
4. SEE CUYAHOGA COUNTY DEPARTMENT OF PUBLIC WORKS CONSTRUCTION DRAWING CP-1C FOR CURB PLATE DETAILS.
5. MIN. LAP LENGTH FOR #5 BARS = 2'-3"
   MIN. LAP LENGTH FOR #4 BARS = 1'-10"
6. SEE SHEETS 3/44 AND 4/44 FOR AESTHETIC DETAILS AND STRUCTURE NOTES.
7. THE PROPOSED GAS LINE TO BE CONSTRUCTED BY DOMINION ENERGY AND ATTACHED TO THE BRIDGE IS PART OF A SEPARATE PROJECT AND IS NOT SHOWN BECAUSE THE FINAL LOCATION WAS NOT ESTABLISHED AT THE TIME OF PLAN SUBMISSION.

DESIGN AGENCY
BURGESS & NIPLE
100 WEST ERIE STREET
PAINESVILLE, OHIO 44077

DESIGNED	DRAWN	REVIEWED	DATE
GJL	WTB	DWL	09/2021
CHECKED	REVISED	STRUCTURE FILE NUMBER	
MAB		1876083	

TRANSVERSE SECTION
BRIDGE 00.42
OVER CUYAHOGA RIVER

CUY - OLD ROCKSIDE ROAD

P:\PR57030\Cadd\Sheets\ORR_91563_0042_ST001.dwg 13-Sep-21 11:37 AM

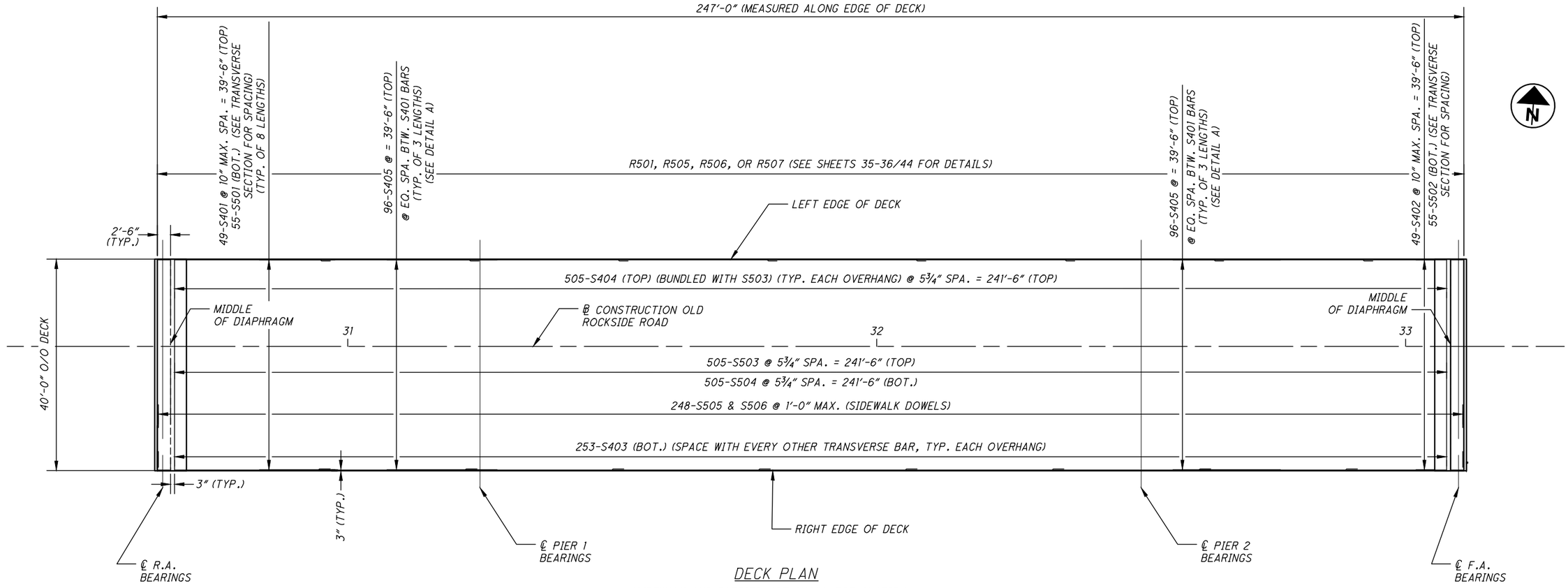

DECK PLAN

(SIDEWALK AND BARRIER NOT SHOWN FOR CLARITY)

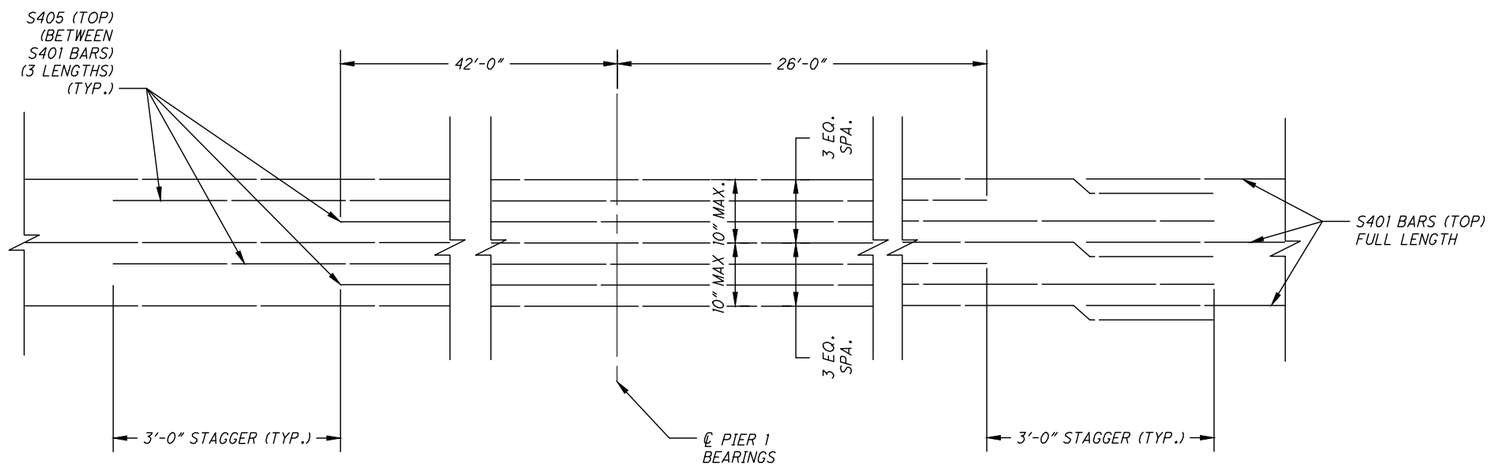

DETAIL A

(PIER 1 SHOWN, PIER 2 OPPOSITE HAND)

NOTES:

1. MINIMUM REINFORCING LAP LENGTHS:
   #4 BARS = 1'-10"
   #5 BARS = 2'-3"
2. SEE SHEETS 39/44 FOR SIDEWALK DETAILS INCLUDING SIDEWALK REBAR THAT EXTENDS INTO THE DECK.
3. SEE SHEETS 26/44, 27/44, 28/44, AND 29,44 FOR SEMI-INTEGRAL DETAILS AND DIAPHRAGM PLACEMENT NOTE.
4. SEE SHEET 30/44 FOR TRANSVERSE SECTION.

DESIGN AGENCY
BURGESS & NIPLE
100 WEST ERIE STREET
PAINESVILLE, OHIO 44077

DESIGNED	DRAWN	REVIEWED	DATE
GJL	WTB	DWL	09/2021
CHECKED	REVISED	STRUCTURE FILE NUMBER	
MAB		1876083	

DECK PLAN
BRIDGE 00.42
OVER CUYAHOGA RIVER

CUY - OLD ROCKSIDE ROAD

P:\PR57030\Cadd\Sheets\ORR_91563_0042_SD001.dwg 13-Sep-21 11:38 AM

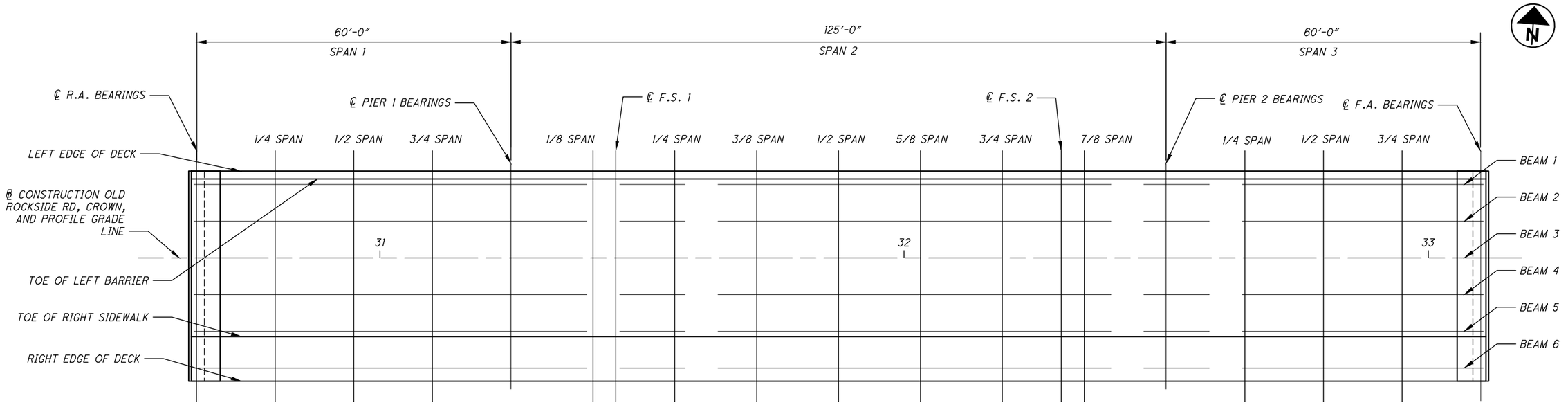

CRITICAL BRIDGE POINTS PLAN

(FOR USE WITH SCREED, TOP OF HAUNCH, AND FINAL DECK SURFACE ELEVATION TABLES)

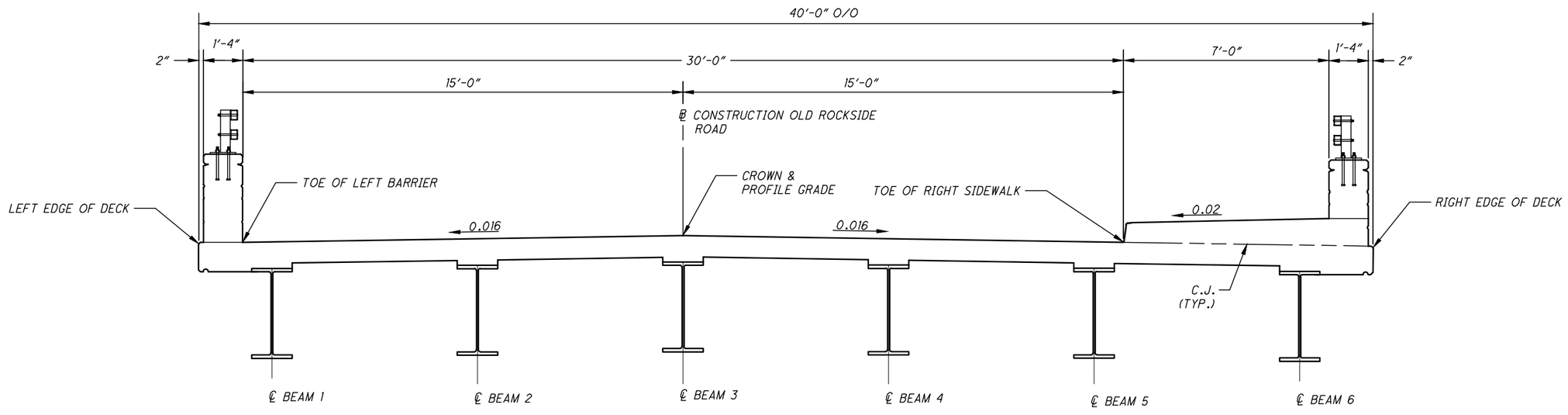

CRITICAL BRIDGE POINTS TRANSVERSE SECTION

NOTES:

1. SEE SHEET 33/44 FOR TOP OF HAUNCH ELEVATION TABLES, FINISHED DECK ELEVATION TABLES, AND SCREED ELEVATION TABLES.

DESIGN AGENCY
BURGESS & NIPLE
100 WEST ERIE STREET
PAINESVILLE, OHIO 44077

DESIGNED	DRAWN	REVIEWED	DATE
BCS	WTB	DWL	09/2021
CHECKED	REVISED	STRUCTURE FILE NUMBER	
MAB		1876083	

CRITICAL BRIDGE POINTS LOCATIONS
BRIDGE 00.42
OVER CUYAHOGA RIVER

CUY - OLD ROCKSIDE ROAD

P:\PR57030\Cadd\Sheets\ORR_91563_0042_SS006.dwg 13-Sep-21 11:38 AM

TOP OF HAUNCH ELEVATIONS

ELEVATION LINE	REAR ABUTMENT		SPAN 1						PIER 1		SPAN 2									
			1/4 SPAN		1/2 SPAN		3/4 SPAN				1/8 SPAN		F.S. 1		1/4 SPAN		3/8 SPAN		1/2 SPAN	
	STATION	EL.	STATION	EL.	STATION	EL.	STATION	EL.	STATION	EL.	STATION	EL.	STATION	EL.	STATION	EL.	STATION	EL.	STATION	EL.
BEAM 1	30+65.00	607.30	30+80.00	608.13	30+95.00	608.89	31+10.00	609.53	31+25.00	610.09	31+40.63	610.61	31+45.00	610.74	31+56.25	611.02	31+71.88	611.28	31+87.50	611.36
BEAM 2	30+65.00	607.41	30+80.00	608.25	30+95.00	609.00	31+10.00	609.65	31+25.00	610.20	31+40.63	610.71	31+45.00	610.83	31+56.25	611.10	31+71.88	611.35	31+87.50	611.43
BEAM 3, CROWN, PGL	30+65.00	607.52	30+80.00	608.36	30+95.00	609.12	31+10.00	609.76	31+25.00	610.31	31+40.63	610.81	31+45.00	610.93	31+56.25	611.19	31+71.88	611.43	31+87.50	611.50
BEAM 4	30+65.00	607.41	30+80.00	608.25	30+95.00	609.00	31+10.00	609.65	31+25.00	610.20	31+40.63	610.70	31+45.00	610.82	31+56.25	611.08	31+71.88	611.32	31+87.50	611.39
BEAM 5	30+65.00	607.30	30+80.00	608.13	30+95.00	608.89	31+10.00	609.53	31+25.00	610.09	31+40.63	610.61	31+45.00	610.74	31+56.25	611.02	31+71.88	611.28	31+87.50	611.36
BEAM 6	30+65.00	607.19	30+80.00	608.02	30+95.00	608.77	31+10.00	609.41	31+25.00	609.98	31+40.63	610.53	31+45.00	610.67	31+56.25	610.98	31+71.88	611.27	31+87.50	611.36

TOP OF HAUNCH ELEVATIONS

ELEVATION LINE	SPAN 2								PIER 2		SPAN 3						FORWARD ABUTMENT	
	5/8 SPAN		3/4 SPAN		F.S. 2		7/8 SPAN				1/4 SPAN		1/2 SPAN		3/4 SPAN			
	STATION	EL.	STATION	EL.	STATION	EL.	STATION	EL.	STATION	EL.	STATION	EL.	STATION	EL.	STATION	EL.	STATION	EL.
BEAM 1	32+03.13	611.25	32+18.75	610.96	32+30.00	610.66	32+34.38	610.53	32+50.00	609.98	32+65.00	609.39	32+80.00	608.72	32+95.00	607.95	33+10.00	607.16
BEAM 2	32+03.13	611.32	32+18.75	611.05	32+30.00	610.76	32+34.38	610.62	32+50.00	610.09	32+65.00	609.51	32+80.00	608.84	32+95.00	608.06	33+10.00	607.27
BEAM 3, CROWN, PGL	32+03.13	611.40	32+18.75	611.13	32+30.00	610.85	32+34.38	610.73	32+50.00	610.20	32+65.00	609.62	32+80.00	608.95	32+95.00	608.18	33+10.00	607.38
BEAM 4	32+03.13	611.29	32+18.75	611.02	32+30.00	610.74	32+34.38	610.61	32+50.00	610.09	32+65.00	609.51	32+80.00	608.84	32+95.00	608.06	33+10.00	607.27
BEAM 5	32+03.13	611.25	32+18.75	610.96	32+30.00	610.66	32+34.38	610.53	32+50.00	609.98	32+65.00	609.39	32+80.00	608.72	32+95.00	607.95	33+10.00	607.16
BEAM 6	32+03.13	611.22	32+18.75	610.92	32+30.00	610.60	32+34.38	610.45	32+50.00	609.87	32+65.00	609.27	32+80.00	608.60	32+95.00	607.84	33+10.00	607.05

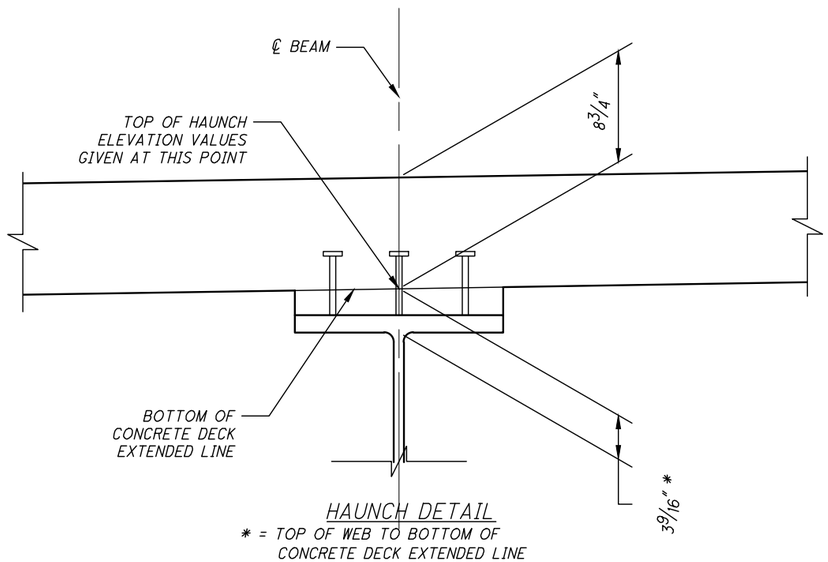

HAUNCH DETAIL

* = TOP OF WEB TO BOTTOM OF CONCRETE DECK EXTENDED LINE

NOTES:

1. SEE SHEET 32/44 FOR CRITICAL BRIDGE POINT ELEVATION LOCATIONS.
2. TOP OF HAUNCH ELEVATIONS SHOWN REPRESENT THE THEORETICAL LOCATION OF THE BOTTOM OF THE DECK ABOVE THE BEAM HAUNCH PRIOR TO DEFLECTION CAUSED BY DECK PLACEMENT AND OTHER ANTICIPATED DEAD LOADS.

DESIGN AGENCY
BURGESS & NIPLE
100 WEST ERIE STREET
PAINESVILLE, OHIO 44077

DESIGNED	DRAWN	REVIEWED	DATE
BCS	WTB	DWL	09/2021
CHECKED	REVISED	STRUCTURE FILE NUMBER	
MAB		1876083	

TOP OF HAUNCH ELEVATIONS AND DETAILS

BRIDGE 00.42
OVER CUYAHOGA RIVER

CUY - OLD
ROCKSIDE ROAD

P:\PR57030\Cadd\Sheets\ORR_91563_0042_SS009.dwg 13-Sep-21 11:38 AM

DECK SCREED ELEVATIONS

ELEVATION LINE	REAR ABUTMENT		SPAN 1						PIER 1		SPAN 2									
			1/4 SPAN		1/2 SPAN		3/4 SPAN				1/8 SPAN		F.S. 1		1/4 SPAN		3/8 SPAN		1/2 SPAN	
	STATION	EL.	STATION	EL.	STATION	EL.	STATION	EL.	STATION	EL.	STATION	EL.	STATION	EL.	STATION	EL.	STATION	EL.	STATION	EL.
LEFT EDGE OF DECK	30+65.00	608.01	30+80.00	608.85	30+95.00	609.60	31+10.00	610.24	31+25.00	610.80	31+40.63	611.32	31+45.00	611.45	31+56.25	611.73	31+71.88	611.99	31+87.50	612.07
TOE OF LEFT BARRIER	30+65.00	608.01	30+80.00	608.85	30+95.00	609.60	31+10.00	610.24	31+25.00	610.80	31+40.63	611.32	31+45.00	611.45	31+56.25	611.73	31+71.88	611.99	31+87.50	612.07
BEAM 1	30+65.00	608.03	30+80.00	608.86	30+95.00	609.62	31+10.00	610.26	31+25.00	610.82	31+40.63	611.34	31+45.00	611.47	31+56.25	611.75	31+71.88	612.01	31+87.50	612.09
BEAM 2	30+65.00	608.14	30+80.00	608.98	30+95.00	609.73	31+10.00	610.38	31+25.00	610.93	31+40.63	611.44	31+45.00	611.56	31+56.25	611.83	31+71.88	612.08	31+87.50	612.15
BEAM 3, CROWN, PGL	30+65.00	608.25	30+80.00	609.09	30+95.00	609.85	31+10.00	610.49	31+25.00	611.04	31+40.63	611.54	31+45.00	611.66	31+56.25	611.92	31+71.88	612.16	31+87.50	612.23
BEAM 4	30+65.00	608.14	30+80.00	608.98	30+95.00	609.73	31+10.00	610.38	31+25.00	610.93	31+40.63	611.43	31+45.00	611.55	31+56.25	611.81	31+71.88	612.04	31+87.50	612.12
BEAM 5	30+65.00	608.03	30+80.00	608.86	30+95.00	609.62	31+10.00	610.26	31+25.00	610.82	31+40.63	611.34	31+45.00	611.47	31+56.25	611.75	31+71.88	612.01	31+87.50	612.09
TOE OF SIDEWALK	30+65.00	608.01	30+80.00	608.85	30+95.00	609.60	31+10.00	610.24	31+25.00	610.80	31+40.63	611.32	31+45.00	611.45	31+56.25	611.73	31+71.88	611.99	31+87.50	612.07
BEAM 6	30+65.00	607.92	30+80.00	608.75	30+95.00	609.50	31+10.00	610.14	31+25.00	610.71	31+40.63	611.26	31+45.00	611.40	31+56.25	611.71	31+71.88	612.00	31+87.50	612.09
RIGHT EDGE OF DECK	30+65.00	607.88	30+80.00	608.71	30+95.00	609.46	31+10.00	610.10	31+25.00	610.67	31+40.63	611.22	31+45.00	611.36	31+56.25	611.67	31+71.88	611.96	31+87.50	612.05

DECK SCREED ELEVATIONS

ELEVATION LINE	SPAN 2								PIER 2		SPAN 3						FORWARD ABUTMENT	
	5/8 SPAN		3/4 SPAN		F.S. 2		7/8 SPAN				1/4 SPAN		1/2 SPAN		3/4 SPAN			
	STATION	EL.	STATION	EL.	STATION	EL.	STATION	EL.	STATION	EL.	STATION	EL.	STATION	EL.	STATION	EL.	STATION	EL.
LEFT EDGE OF DECK	32+03.13	611.96	32+18.75	611.68	32+30.00	611.38	32+34.38	611.24	32+50.00	610.69	32+65.00	610.10	32+80.00	609.43	32+95.00	608.66	33+10.00	607.87
TOE OF LEFT BARRIER	32+03.13	611.96	32+18.75	611.68	32+30.00	611.38	32+34.38	611.24	32+50.00	610.69	32+65.00	610.10	32+80.00	609.43	32+95.00	608.66	33+10.00	607.87
BEAM 1	32+03.13	611.98	32+18.75	611.69	32+30.00	611.39	32+34.38	611.26	32+50.00	610.71	32+65.00	610.12	32+80.00	609.45	32+95.00	608.68	33+10.00	607.89
BEAM 2	32+03.13	612.05	32+18.75	611.77	32+30.00	611.48	32+34.38	611.35	32+50.00	610.82	32+65.00	610.24	32+80.00	609.57	32+95.00	608.79	33+10.00	608.00
BEAM 3, CROWN, PGL	32+03.13	612.13	32+18.75	611.86	32+30.00	611.58	32+34.38	611.45	32+50.00	610.93	32+65.00	610.35	32+80.00	609.68	32+95.00	608.91	33+10.00	608.11
BEAM 4	32+03.13	612.02	32+18.75	611.75	32+30.00	611.47	32+34.38	611.34	32+50.00	610.82	32+65.00	610.24	32+80.00	609.57	32+95.00	608.79	33+10.00	608.00
BEAM 5	32+03.13	611.98	32+18.75	611.69	32+30.00	611.39	32+34.38	611.26	32+50.00	610.71	32+65.00	610.12	32+80.00	609.45	32+95.00	608.68	33+10.00	607.89
TOE OF SIDEWALK	32+03.13	611.96	32+18.75	611.68	32+30.00	611.38	32+34.38	611.24	32+50.00	610.69	32+65.00	610.10	32+80.00	609.43	32+95.00	608.66	33+10.00	607.87
BEAM 6	32+03.13	611.95	32+18.75	611.65	32+30.00	611.32	32+34.38	611.18	32+50.00	610.59	32+65.00	610.00	32+80.00	609.33	32+95.00	608.56	33+10.00	607.78
RIGHT EDGE OF DECK	32+03.13	611.91	32+18.75	611.61	32+30.00	611.28	32+34.38	611.14	32+50.00	610.55	32+65.00	609.96	32+80.00	609.29	32+95.00	608.52	33+10.00	607.74

FINAL TOP OF DECK ELEVATIONS

ELEVATION LINE	REAR ABUTMENT		SPAN 1						PIER 1		SPAN 2									
			1/4 SPAN		1/2 SPAN		3/4 SPAN				1/8 SPAN		F.S. 1		1/4 SPAN		3/8 SPAN		1/2 SPAN	
	STATION	EL.	STATION	EL.	STATION	EL.	STATION	EL.	STATION	EL.	STATION	EL.	STATION	EL.	STATION	EL.	STATION	EL.	STATION	EL.
LEFT EDGE OF DECK	30+65.00	608.01	30+80.00	608.86	30+95.00	609.62	31+10.00	610.27	31+25.00	610.80	31+40.63	611.23	31+45.00	611.33	31+56.25	611.53	31+71.88	611.71	31+87.50	611.76
TOE OF LEFT BARRIER	30+65.00	608.01	30+80.00	608.86	30+95.00	609.62	31+10.00	610.27	31+25.00	610.80	31+40.63	611.23	31+45.00	611.33	31+56.25	611.53	31+71.88	611.71	31+87.50	611.76
BEAM 1	30+65.00	608.03	30+80.00	608.87	30+95.00	609.64	31+10.00	610.29	31+25.00	610.82	31+40.63	611.25	31+45.00	611.35	31+56.25	611.55	31+71.88	611.73	31+87.50	611.78
BEAM 2	30+65.00	608.14	30+80.00	608.99	30+95.00	609.75	31+10.00	610.40	31+25.00	610.93	31+40.63	611.36	31+45.00	611.46	31+56.25	611.66	31+71.88	611.84	31+87.50	611.89
BEAM 3, CROWN, PGL	30+65.00	608.25	30+80.00	609.10	30+95.00	609.86	31+10.00	610.51	31+25.00	611.04	31+40.63	611.47	31+45.00	611.57	31+56.25	611.77	31+71.88	611.95	31+87.50	612.00
BEAM 4	30+65.00	608.14	30+80.00	608.99	30+95.00	609.75	31+10.00	610.40	31+25.00	610.93	31+40.63	611.36	31+45.00	611.46	31+56.25	611.66	31+71.88	611.84	31+87.50	611.89
BEAM 5	30+65.00	608.03	30+80.00	608.87	30+95.00	609.64	31+10.00	610.29	31+25.00	610.82	31+40.63	611.25	31+45.00	611.35	31+56.25	611.55	31+71.88	611.73	31+87.50	611.78
TOE OF SIDEWALK	30+65.00	608.01	30+80.00	608.86	30+95.00	609.62	31+10.00	610.27	31+25.00	610.80	31+40.63	611.23	31+45.00	611.33	31+56.25	611.53	31+71.88	611.71	31+87.50	611.76
BEAM 6	30+65.00	607.92	30+80.00	608.76	30+95.00	609.53	31+10.00	610.17	31+25.00	610.71	31+40.63	611.14	31+45.00	611.23	31+56.25	611.44	31+71.88	611.61	31+87.50	611.66
RIGHT EDGE OF DECK	30+65.00	607.88	30+80.00	608.72	30+95.00	609.49	31+10.00	610.13	31+25.00	610.67	31+40.63	611.10	31+45.00	611.19	31+56.25	611.40	31+71.88	611.57	31+87.50	611.62

FINAL TOP OF DECK ELEVATIONS

ELEVATION LINE	SPAN 2								PIER 2		SPAN 3						FORWARD ABUTMENT	
	5/8 SPAN		3/4 SPAN		F.S. 2		7/8 SPAN				1/4 SPAN		1/2 SPAN		3/4 SPAN			
	STATION	EL.	STATION	EL.	STATION	EL.	STATION	EL.	STATION	EL.	STATION	EL.	STATION	EL.	STATION	EL.	STATION	EL.
LEFT EDGE OF DECK	32+03.13	611.68	32+18.75	611.48	32+30.00	611.25	32+34.38	611.15	32+50.00	610.69	32+65.00	610.13	32+80.00	609.46	32+95.00	608.67	33+10.00	607.87
TOE OF LEFT BARRIER	32+03.13	611.68	32+18.75	611.48	32+30.00	611.25	32+34.38	611.15	32+50.00	610.69	32+65.00	610.13	32+80.00	609.46	32+95.00	608.67	33+10.00	607.87
BEAM 1	32+03.13	611.70	32+18.75	611.49	32+30.00	611.27	32+34.38	611.16	32+50.00	610.71	32+65.00	610.15	32+80.00	609.47	32+95.00	608.69	33+10.00	607.89
BEAM 2	32+03.13	611.81	32+18.75	611.61	32+30.00	611.38	32+34.38	611.28	32+50.00	610.82	32+65.00	610.26	32+80.00	609.58	32+95.00	608.80	33+10.00	608.00
BEAM 3, CROWN, PGL	32+03.13	611.92	32+18.75	611.72	32+30.00	611.49	32+34.38	611.39	32+50.00	610.93	32+65.00	610.37	32+80.00	609.70	32+95.00	608.91	33+10.00	608.11
BEAM 4	32+03.13	611.81	32+18.75	611.61	32+30.00	611.38	32+34.38	611.28	32+50.00	610.82	32+65.00	610.26	32+80.00	609.58	32+95.00	608.80	33+10.00	608.00
BEAM 5	32+03.13	611.70	32+18.75	611.49	32+30.00	611.27	32+34.38	611.16	32+50.00	610.71	32+65.00	610.15	32+80.00	609.47	32+95.00	608.69	33+10.00	607.89
TOE OF SIDEWALK	32+03.13	611.68	32+18.75	611.48	32+30.00	611.25	32+34.38	611.15	32+50.00	610.69	32+65.00	610.13	32+80.00	609.46	32+95.00	608.67	33+10.00	607.87
BEAM 6	32+03.13	611.59	32+18.75	611.38	32+30.00	611.16	32+34.38	611.05	32+50.00	610.59	32+65.00	610.04	32+80.00	609.36	32+95.00	608.58	33+10.00	607.78
RIGHT EDGE OF DECK	32+03.13	611.55	32+18.75	611.34	32+30.00	611.12	32+34.38	611.01	32+50.00	610.55	32+65.00	610.00	32+80.00	609.32	32+95.00	608.54	33+10.00	607.74

NOTES:

1. FINAL DECK SURFACE ELEVATIONS SHOWN REPRESENT THE DECK SURFACE LOCATION AFTER ALL ANTICIPATED DEAD LOAD DEFLECTIONS HAVE OCCURRED.
2. SCREED ELEVATIONS SHOWN REPRESENT THE THEORETICAL DECK SURFACE LOCATION PRIOR TO DEFLECTIONS CAUSED BY DECK PLACEMENT AND OTHER ANTICIPATED DEAD LOADS.
3. SEE SHEET 32/44 FOR CRITICAL BRIDGE POINT ELEVATION LOCATIONS.

DESIGN AGENCY
BURGESS & NIPLE
100 WEST ERIE STREET
PAINESVILLE, OHIO 44077

DESIGNED BCS | DRAWN WTB | CHECKED MAB | REVIEWED DWL | DATE 09/2021 | REVISED | STRUCTURE FILE NUMBER 1876083

SCREED AND FINAL DECK SURFACE ELEVATIONS

BRIDGE 00.42
OVER CUYAHOGA RIVER

CUY - OLD
ROCKSIDE ROAD

P:\PR57030\Cadd\Sheets\ORR_91563_0042_SS007.dwg 13-Sep-21 11:39 AM

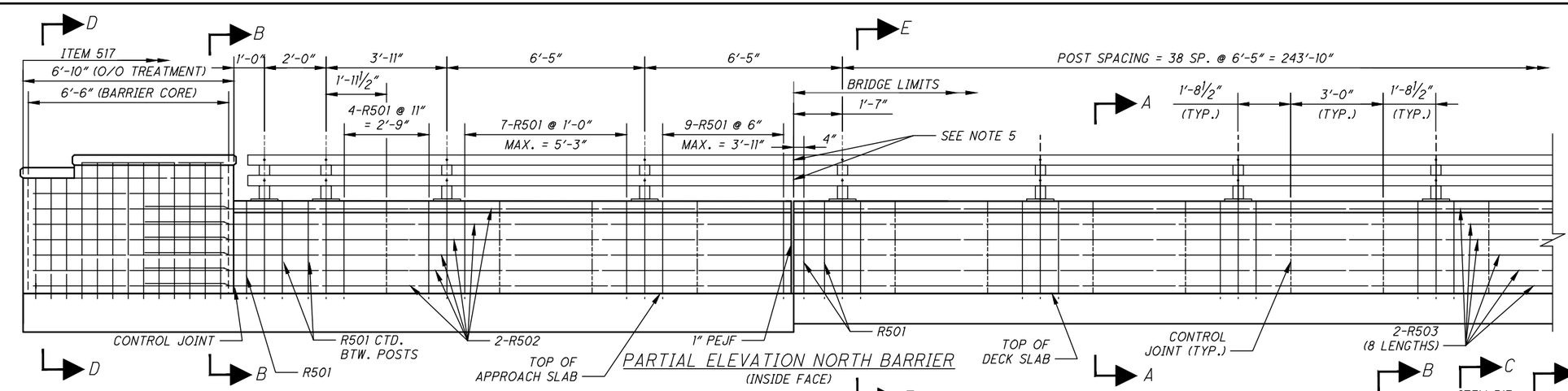

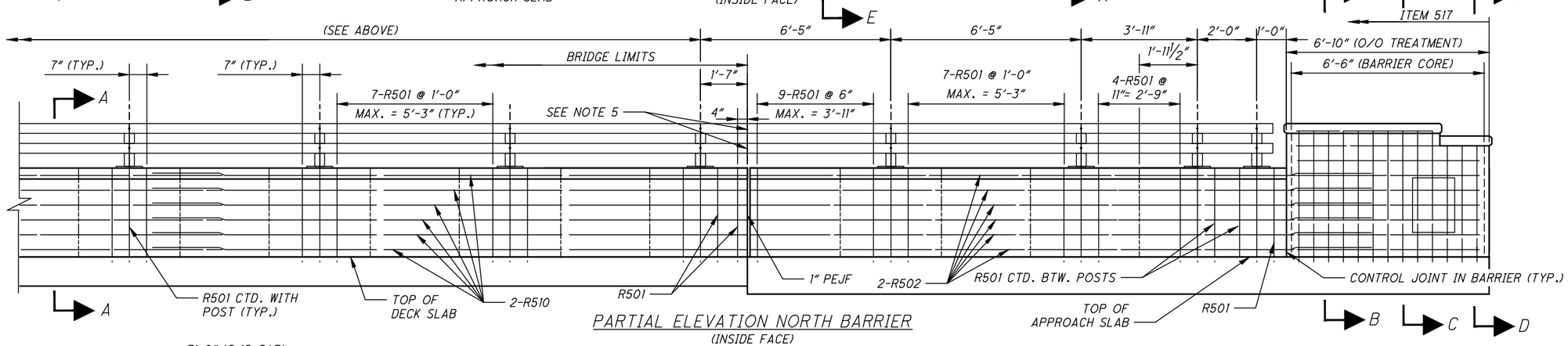

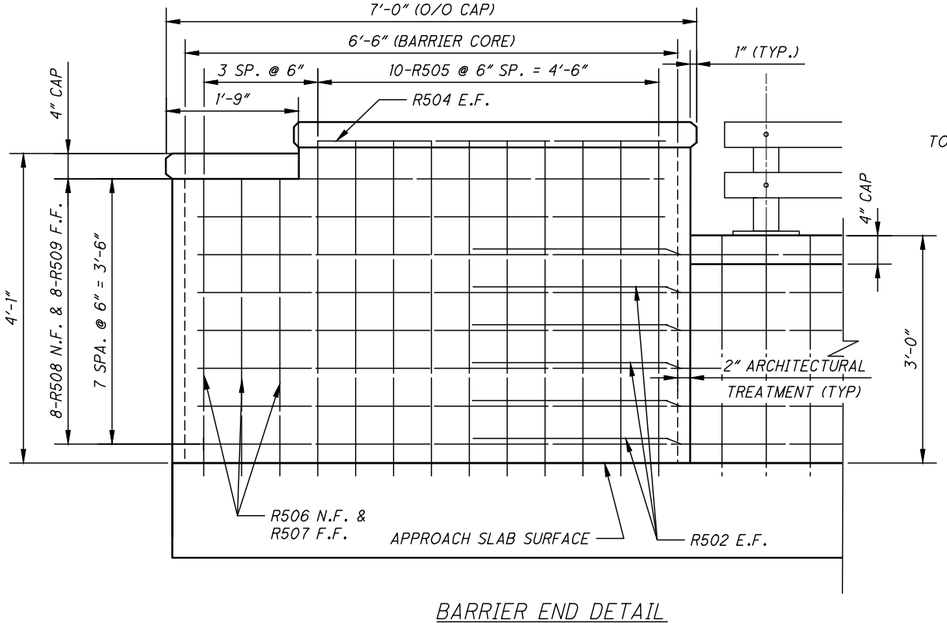

BARRIER END DETAIL
(BTA INSET EAST END ONLY)

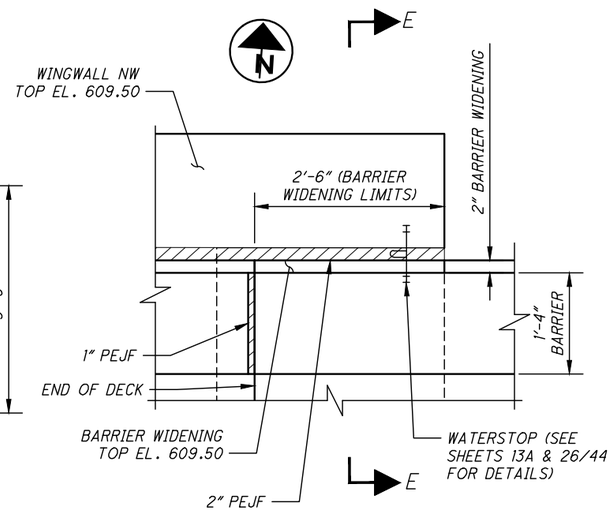

BARRIER WIDENING DETAIL
(WEST SIDE ONLY)

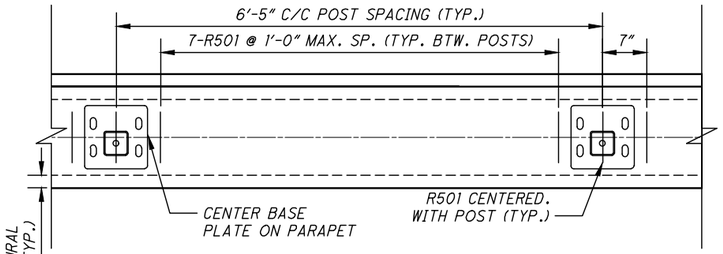

TYPICAL POST PLACEMENT

NOTES:

1. SEE SHEET 36/44 FOR SECTIONS A-A, B-B, C-C, D-D AND E-E.
2. SEE CUYAHOGA COUNTY STANDARD DRAWING PRF-1C AND BR-2-15C FOR DETAILS NOT SHOWN. SEE ALSO ODOT STANDARD BRIDGE DRAWING BR-2-15.
3. DEPTH OF RELIEF OF ARCHITECTURAL TREATMENT IS A NOMINAL 2".
4. MINIMUM LAP LENGTH FOR:
   #5 BARS = 2'-3"
5. PROVIDE RAILING SPLICES AT BRIDGE ENDS AND AT 40'-0" MAXIMUM INTERVALS.

DESIGN AGENCY
BURGESS & NIPLE
100 WEST ERIE STREET
PAINESVILLE, OHIO 44077

DESIGNED	DRAWN	REVIEWED	DATE
GJL	WTB	DWL	09/2021
CHECKED	REVISED	STRUCTURE FILE NUMBER	
MAB		1876083	

NORTH BARRIER ELEVATION
BRIDGE 00.42
OVER CUYAHOGA RIVER

CUY - OLD ROCKSIDE ROAD

P:\PR57030\Cadd\Sheets\ORR_91563_0042_SM003.dwg 13-Sep-21 11:39 AM

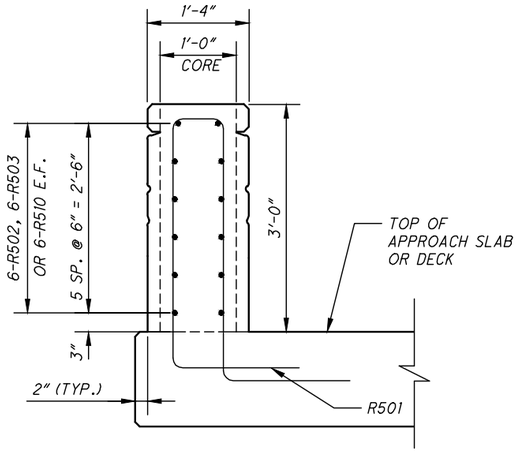

SECTION A-A

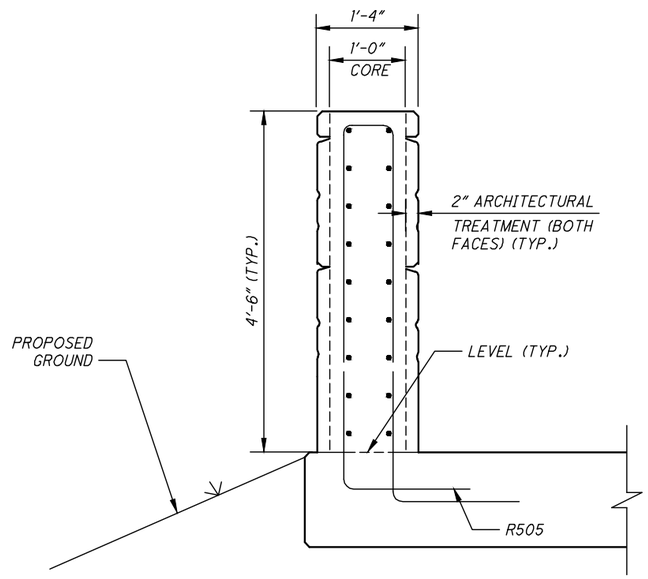

SECTION B-B

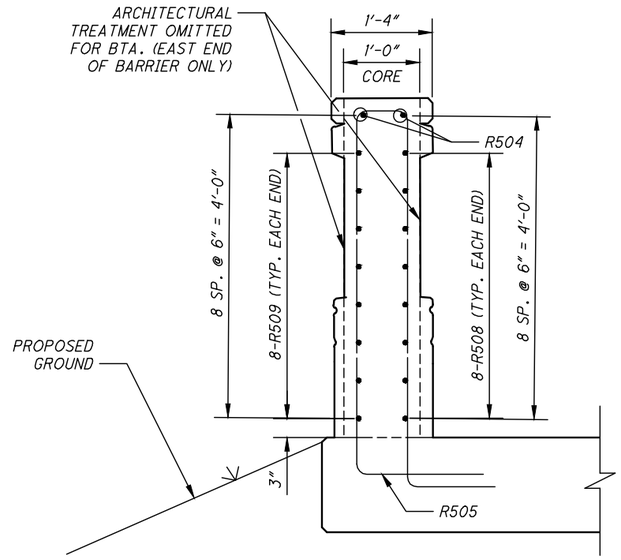

SECTION C-C

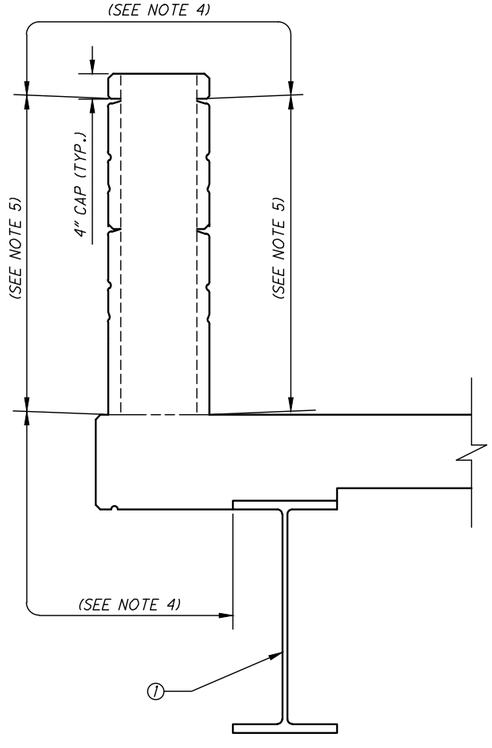

NORTH BARRIER SEALING LIMITS

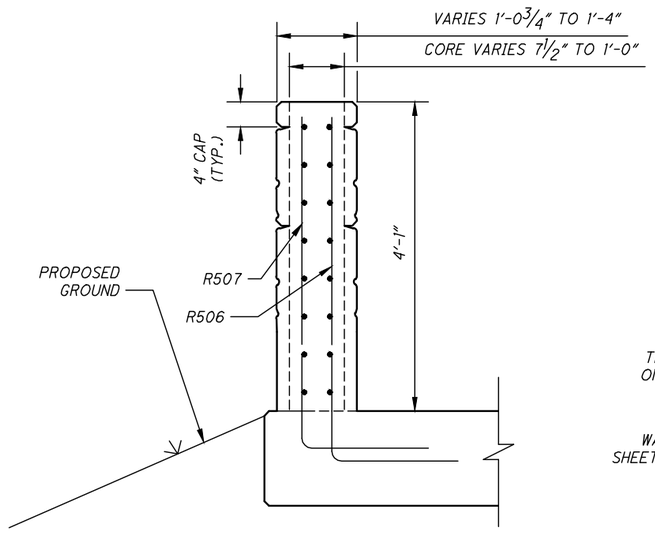

SECTION D-D

LEGEND:

(1) = BEAM NUMBER 1

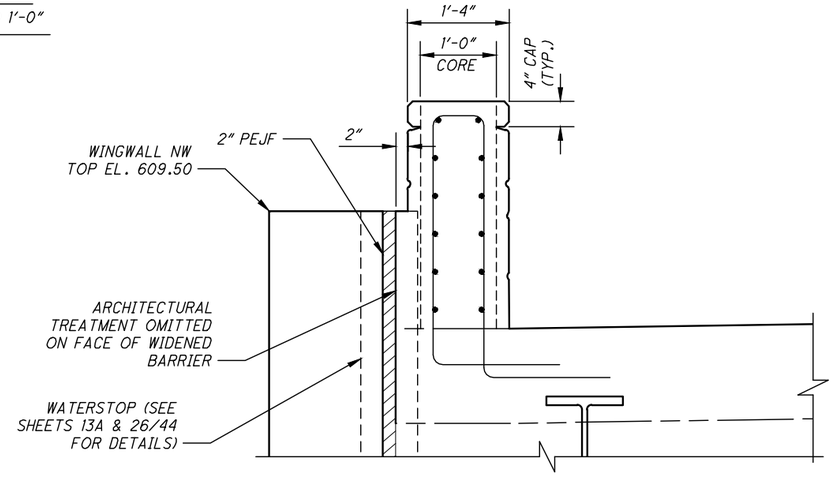

SECTION E-E
(SEE SECTION A-A FOR REBAR)

NOTES:

1. SEE CUYAHOGA COUNTY STANDARD DRAWINGS AS-1C, CP-1C, BR-2-15C AND PRF-1C FOR INFORMATION NOT SHOWN. ALSO, SEE ODOT STANDARD DRAWING BR-2-15.
2. SEE SHEET 35/44 FOR LOCATION OF SECTION CUTS.
3. STEEL RAILING NOT SHOWN.
4. ITEM SPECIAL - MISC.: ELASTOMERIC PROTECTIVE AND DECORATIVE CONCRETE COATING, SEE SHEET 4/44 FOR COLOR.
5. ITEM 511 - CONCRETE, MISC.: ARCHITECTURAL TREATMENT, SEE SHEETS 3/44 AND 4/44 FOR NOTES.

DESIGN AGENCY
BURGESS & NIPLE
100 WEST ERIE STREET
PAINESVILLE, OHIO 44077

DESIGNED	DRAWN	REVIEWED	DATE
GJL	WTB	DWL	09/2021
CHECKED	REVISED	STRUCTURE FILE NUMBER	
MAB		1876083	

NORTH BARRIER DETAILS
BRIDGE 00.42
OVER CUYAHOGA RIVER

CUY - OLD ROCKSIDE ROAD

36/44

134/157

P:\PR57030\Cadd\Sheets\ORR_91563_0042_SM004.dwg 13-Sep-21 11:40 AM

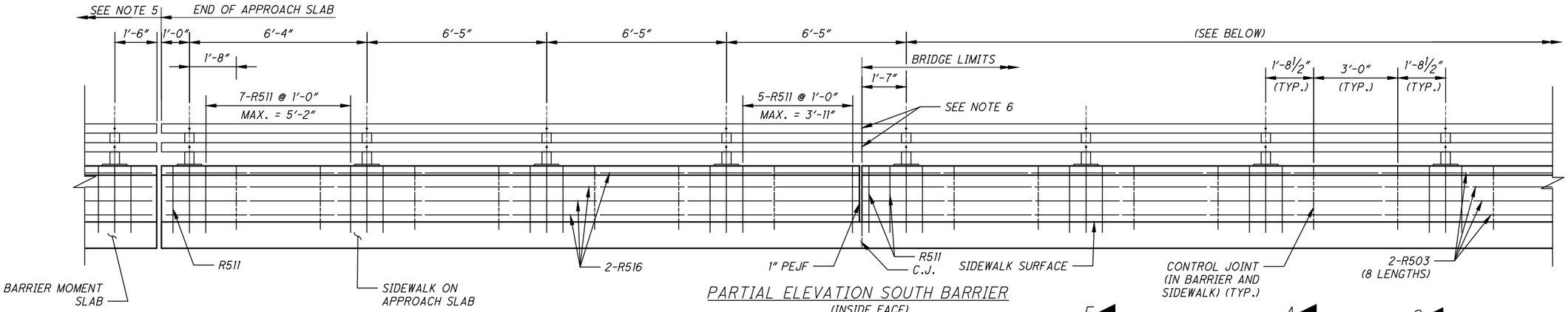

PARTIAL ELEVATION SOUTH BARRIER
(INSIDE FACE)

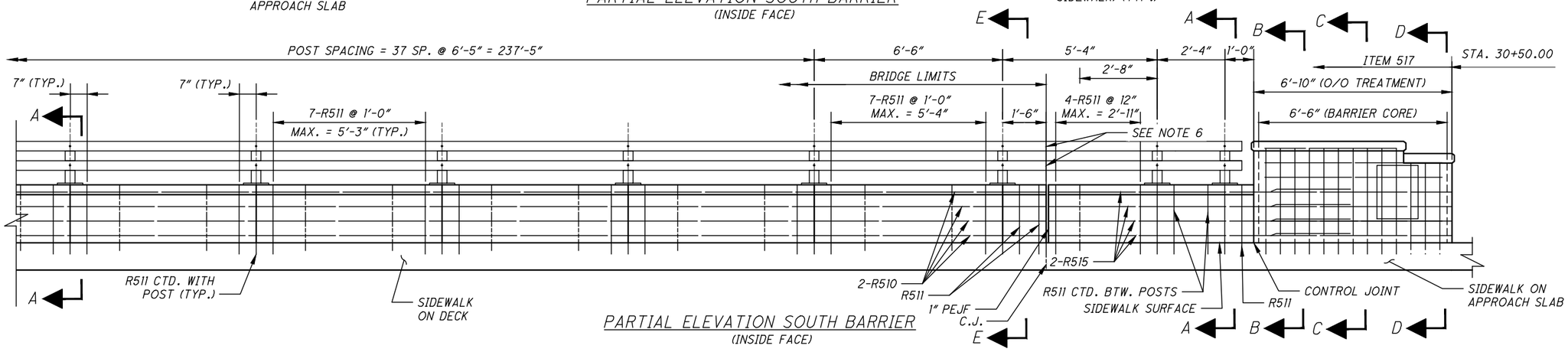

PARTIAL ELEVATION SOUTH BARRIER
(INSIDE FACE)

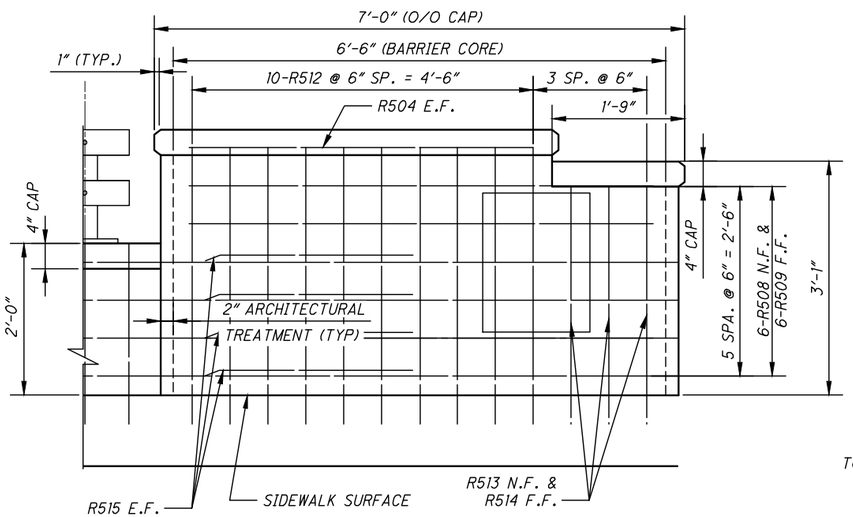

BARRIER END DETAIL (TYPICAL)

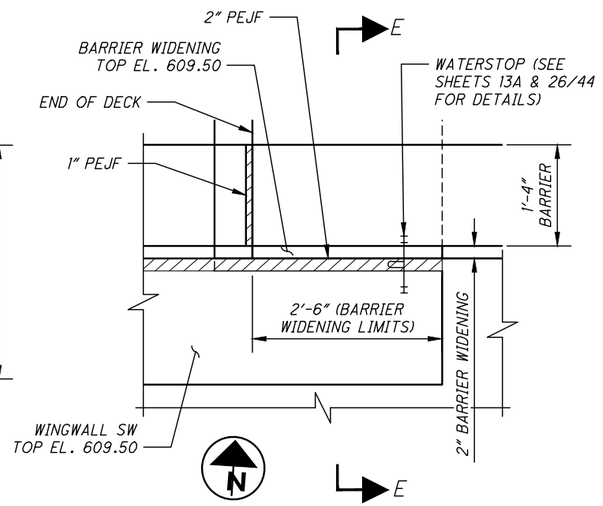

BARRIER WIDENING DETAIL
(WEST SIDE ONLY)

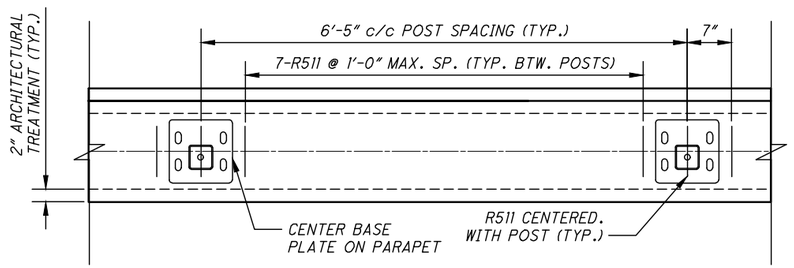

TYPICAL POST PLACEMENT

NOTES:

1. SEE SHEET 38/44 FOR SECTIONS A-A, B-B, C-C, D-D AND E-E.
2. SEE CUYAHOGA COUNTY STANDARD DRAWING PRF-1C AND BR-2-15C FOR DETAILS NOT SHOWN. SEE ALSO ODOT STANDARD BRIDGE DRAWING BR-2-15.
3. DEPTH OF RELIEF OF AESTHETIC FACING IS A NOMINAL 2".
4. MINIMUM LAP LENGTH FOR:
   #5 BARS = 2'-3"
5. SEE BARRIER MOMENT SLAB SHEETS 78/157 AND 79/157 FOR CONTINUATION OF PARAPET, BARRIER, & BARRIER MOMENT SLAB. SET SPACE BETWEEN ENDS OF STEEL TUBES AT 2½" AT 60°F.
6. PROVIDE RAILING SPLICES AT BRIDGE ENDS AND AT 40'-0" MAXIMUM INTERVALS.

DESIGN AGENCY
BURGESS & NIPLE
100 WEST ERIE STREET
PAINESVILLE, OHIO 44077

DESIGNED	DRAWN	REVIEWED	DATE
GJL	WTB	DWL	09/2021
CHECKED	REVISED	STRUCTURE FILE NUMBER	
MAB		1876083	

SOUTH BARRIER ELEVATION
BRIDGE 00.42
OVER CUYAHOGA RIVER

CUY - OLD ROCKSIDE ROAD

37 / 44
135 / 157

P:\PR57030\Cadd\Sheets\ORR_91563_0042_SM005.dwg 13-Sep-21 11:40 AM

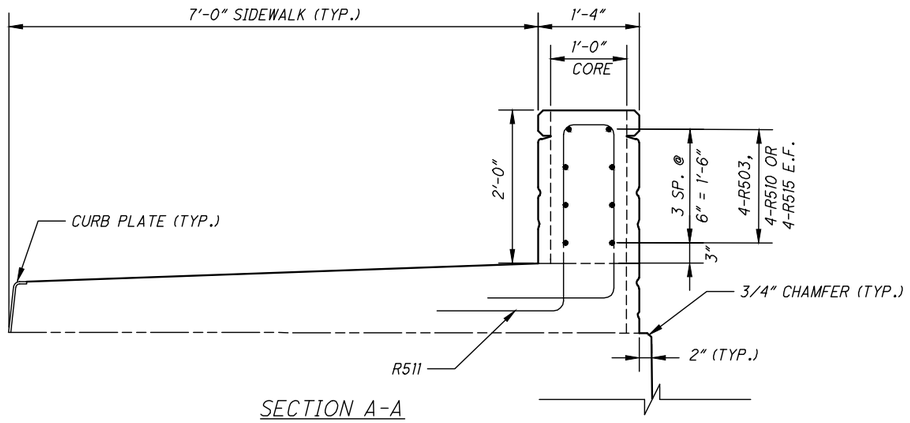

SECTION A-A

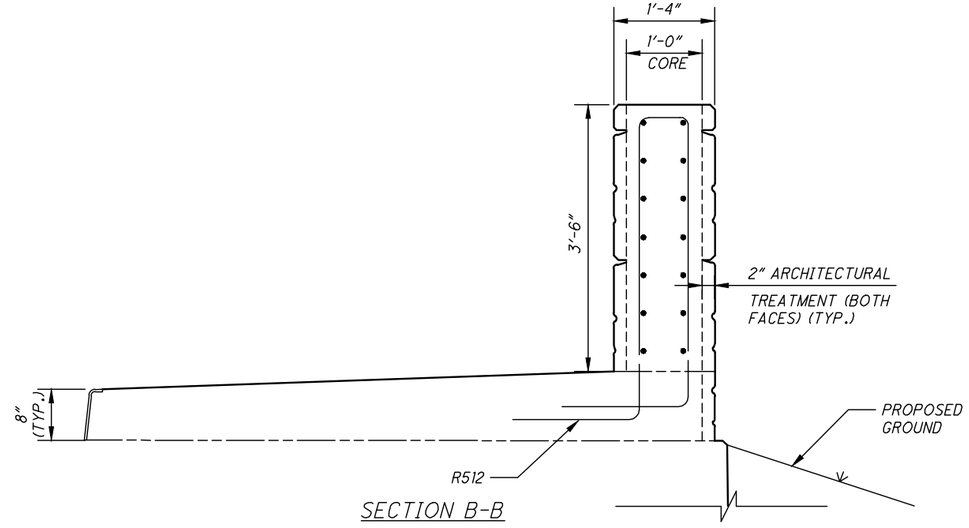

SECTION B-B

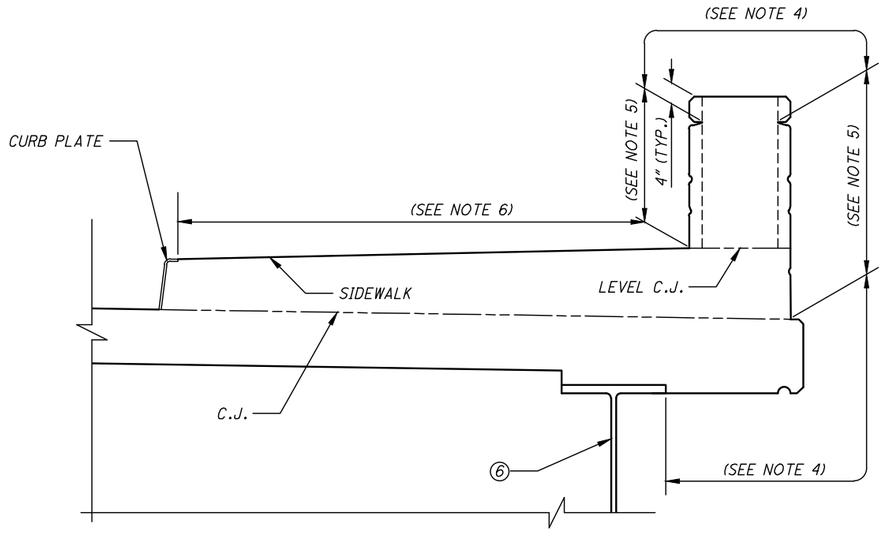

SOUTH BARRIER SEALING LIMITS

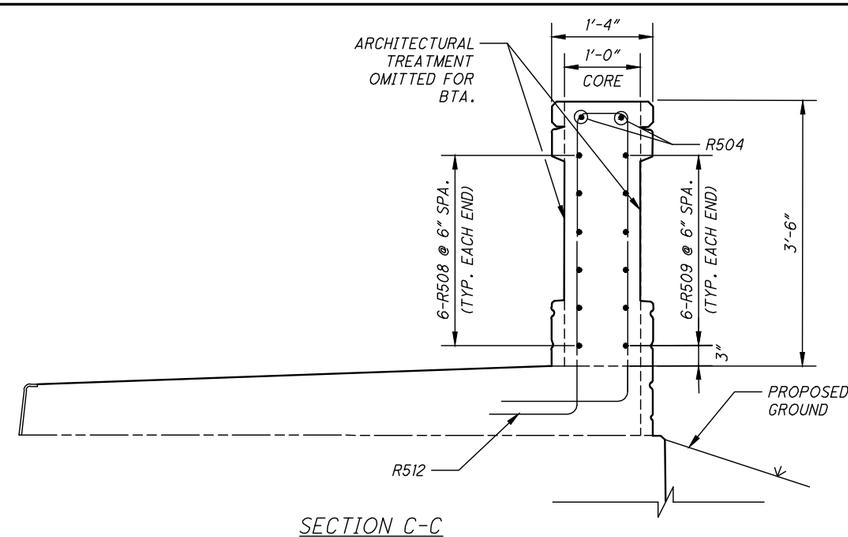

SECTION C-C

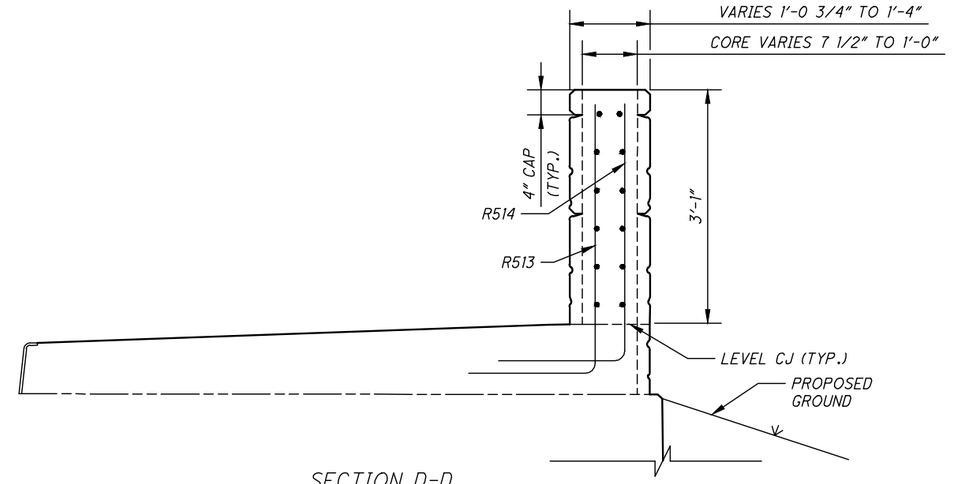

SECTION D-D

LEGEND:

(6) = BEAM NUMBER 6

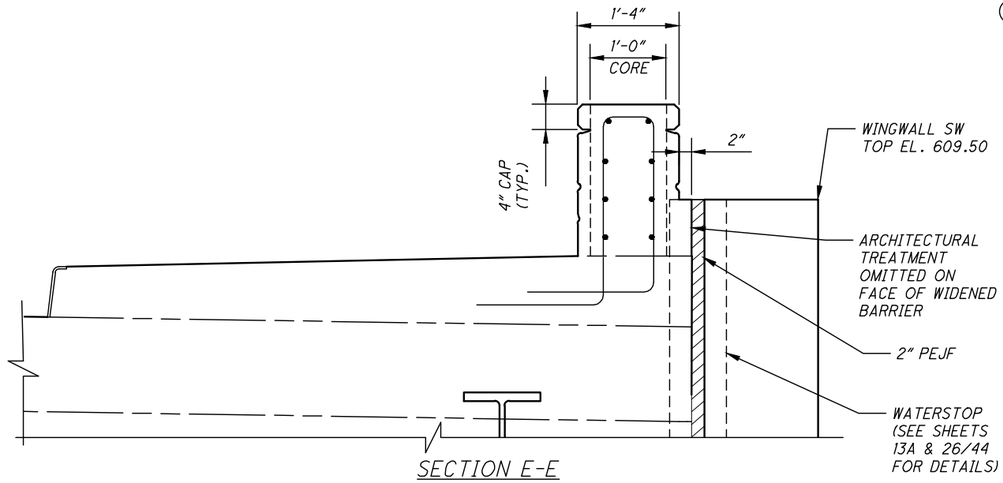

SECTION E-E

(SEE SECTION A-A FOR REBAR)

NOTES:

1. SEE CUYAHOGA COUNTY STANDARD DRAWINGS AS-1C, CP-1C, BR-2-15C AND PRF-1C FOR INFORMATION NOT SHOWN. ALSO, SEE ODOT STANDARD DRAWING BR-2-15.
2. SEE SHEET 37/44 FOR LOCATION OF SECTION CUTS.
3. STEEL RAILING NOT SHOWN.
4. ITEM SPECIAL - SEALING MISC.: ELASTOMERIC PROTECTIVE AND DECORATIVE CONCRETE COATING, SEE SHEET 4/44 FOR COLOR.
5. ITEM 511 - CONCRETE, MISC.: ARCHITECTURAL TREATMENT, SEE SHEETS 3/44 AND 4/44 FOR NOTES.
6. ITEM 512 - SEALING OF CONCRETE SURFACES (NON-EPOXY).

DESIGN AGENCY
BURGESS & NIPLE
100 WEST ERIE STREET
PAINESVILLE, OHIO 44077

DESIGNED	DRAWN	REVIEWED	DATE
GJL	WTB	DWL	09/2021
CHECKED	REVISED	STRUCTURE FILE NUMBER	
MAB		1876083	

SOUTH BARRIER DETAILS
BRIDGE 00.42
OVER CUYAHOGA RIVER

CUY - OLD ROCKSIDE ROAD

38 / 44

136 / 157

P:\PR57030\Cadd\Sheets\ORR_91563_0042_SM006.dwg 13-Sep-21 11:40 AM

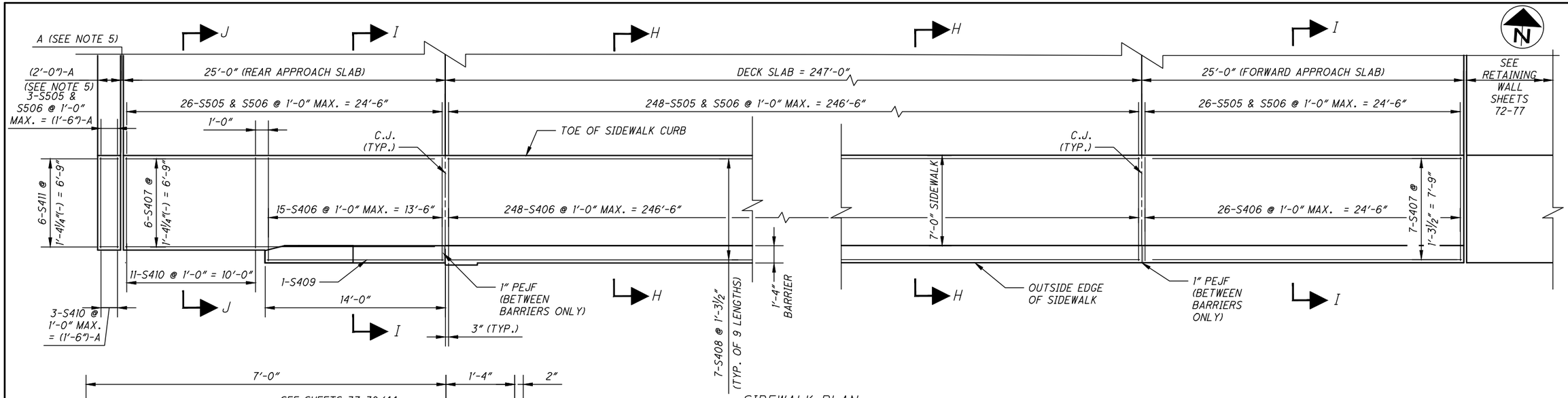

SIDEWALK PLAN

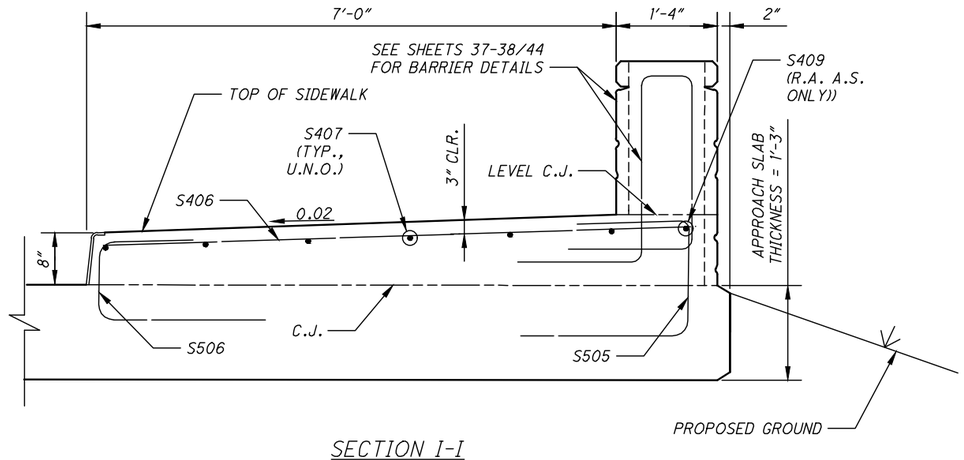

SECTION I-I

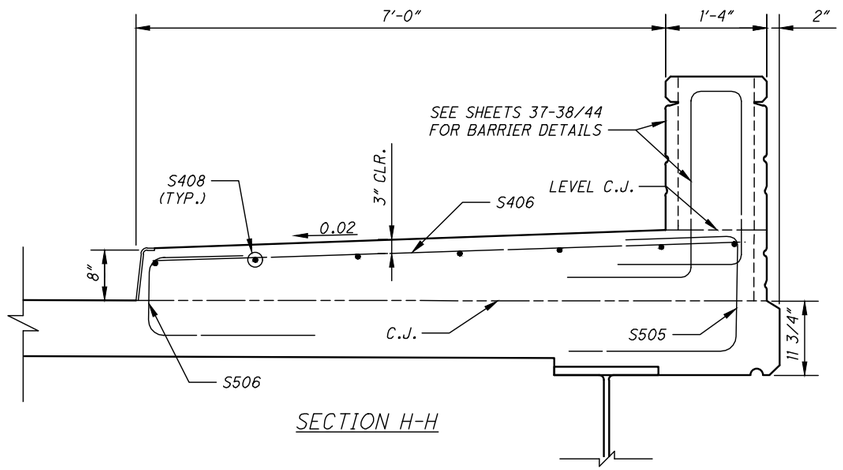

SECTION H-H

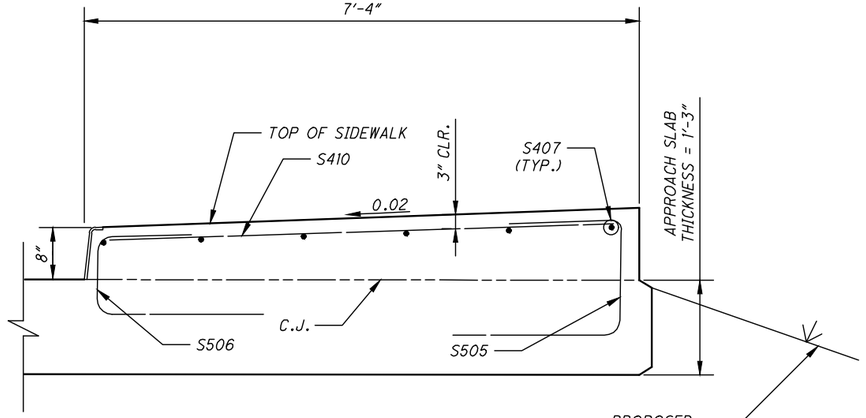

SECTION J-J
(GUARDRAIL NOT SHOWN)

NOTES:

1. SEE SHEET 37/44 AND CUYAHOGA COUNTY STANDARD DRAWING PRF-1C FOR CONTROL JOINT SPACING IN SIDEWALK AND BARRIER.
2. SEE CUYAHOGA COUNTY STANDARD DRAWING PRF-1C AND BR-2-15C FOR DETAILS NOT SHOWN. SEE ALSO ODOT STANDARD BRIDGE DRAWING BR-2-15.
3. MINIMUM LAP LENGTHS ARE AS FOLLOWS:

   #4 BARS = 1'-10"

4. STEEL RAILING AND POSTS NOT SHOWN.
5. SEE ODOT STANDARD DRAWING AS-2-15 FOR JOINT OPENING DIMENSION "A".

DESIGN AGENCY
BURGESS & NIPLE
100 WEST ERIE STREET
PAINESVILLE, OHIO 44077

DESIGNED	DRAWN	REVIEWED	DATE
GJL	WTB	DWL	09/2021
CHECKED	REVISED	STRUCTURE FILE NUMBER	
MAB		1876083	

SIDEWALK PLAN AND DETAILS
BRIDGE 00.42
OVER CUYAHOGA RIVER

CUY - OLD
ROCKSIDE ROAD

39 / 44

137
157

P:\PR57030\Cadd\Sheets\ORR_91563_0042_SM007.dwg 13-Sep-21 11:41 AM

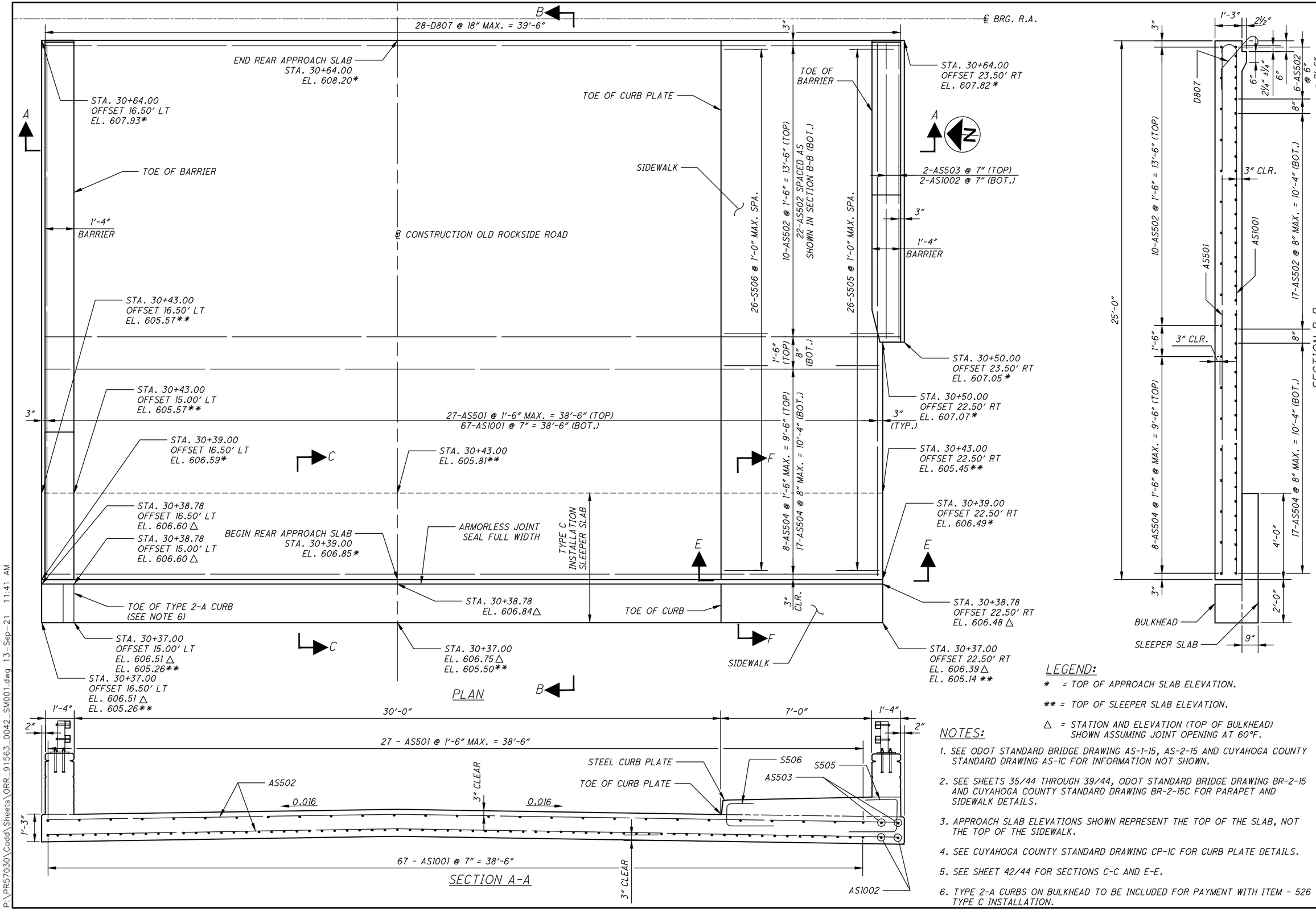

LEGEND:

* = TOP OF APPROACH SLAB ELEVATION.

** = TOP OF SLEEPER SLAB ELEVATION.

△ = STATION AND ELEVATION (TOP OF BULKHEAD) SHOWN ASSUMING JOINT OPENING AT 60°F.

NOTES:

1. SEE ODOT STANDARD BRIDGE DRAWING AS-1-15, AS-2-15 AND CUYAHOGA COUNTY STANDARD DRAWING AS-1C FOR INFORMATION NOT SHOWN.
2. SEE SHEETS 35/44 THROUGH 39/44, ODOT STANDARD BRIDGE DRAWING BR-2-15 AND CUYAHOGA COUNTY STANDARD DRAWING BR-2-15C FOR PARAPET AND SIDEWALK DETAILS.
3. APPROACH SLAB ELEVATIONS SHOWN REPRESENT THE TOP OF THE SLAB, NOT THE TOP OF THE SIDEWALK.
4. SEE CUYAHOGA COUNTY STANDARD DRAWING CP-1C FOR CURB PLATE DETAILS.
5. SEE SHEET 42/44 FOR SECTIONS C-C AND E-E.
6. TYPE 2-A CURBS ON BULKHEAD TO BE INCLUDED FOR PAYMENT WITH ITEM - 526 TYPE C INSTALLATION.

DESIGN AGENCY
BURGESS & NIPLE
100 WEST ERIE STREET
PAINESVILLE, OHIO 44077

DESIGNED	DRAWN	REVIEWED	DATE
GJL	WTB	DWL	09/2021
CHECKED	REVISED	STRUCTURE FILE NUMBER	
MAB		1876083	

REAR APPROACH SLAB DETAILS
BRIDGE 00.42
OVER CUYAHOGA RIVER

CUY - OLD ROCKSIDE ROAD

40/44

138/157

P:\PR57030\Cadd\Sheets\ORR_91563_0042_SM001.dwg 13-Sep-21 11:41 AM

STA. 33+36.00
OFFSET 15.50' LT
EL. 605.38**

STA. 33+38.00
OFFSET 15.00' LT
EL. 606.54 △
EL. 605.30 **

B

STA. 33+38.00
EL. 606.78△
605.54**

ARMORLESS JOINT
SEAL FULL WIDTH

STA. 33+38.00
OFFSET 15.54' RT
△EL. 606.53
△EL. 606.03

½" PEJF (PAID FOR WITH
RETAINING WALL)

BEGIN TYPE 2
CURB AND GUTTER

STA. 33+38.00
OFFSET 21.83' RT
** EL. 606.16

BARRIER MOMENT SLAB

TYPE 2-A CURB
(SEE NOTE 6)

STA. 33+36.22
EL. 606.86△

C

D

STA. 33+36.22
OFFSET 15.50' LT
EL. 606.63△

G

6'-5½" SIDEWALK

G

STA. 33+36.22
OFFSET 23.50' RT
EL. 606.24 △

STA. 33+36.22
OFFSET 15.00' LT
EL. 606.62△

END FORWARD APPROACH SLAB
STA. 33+36.00
EL. 606.87*

TYPE C
INSTALLATION
SLEEPER SLAB

TYPE 2-A CURB
(SEE NOTE 6)

EDGE OF BARRIER MOMENT SLAB

STA. 33+36.22
OFFSET 15.54' RT
△ EL. 606.61
△ EL. 606.11

STA. 33+36.22
OFFSET 22.00' RT
△EL. 606.24

STA. 33+36.00
OFFSET 23.50' RT
EL. 606.49 *

STA. 33+36.00
OFFSET 15.00' LT
EL. 606.63 *

STA. 33+36.00
OFFSET 16.50' LT
EL. 606.63 *

STA. 33+32.00
EL. 605.80**

C

TOE OF CURB PLATE

D

BACK OF
RETAINING
WALL

STA. 33+32.00
OFFSET 21.83' RT
EL. 605.42 **

A

STA. 33+32.00
OFFSET 15.50' LT
EL. 605.56 **

A

TOE OF BARRIER

1'-4"
BARRIER

℄ CONSTRUCTION OLD ROCKSIDE ROAD

18-AS502 @ 1'-6" MAX. = 24'-6" (TOP)
39-AS502 SPACED AS SHOWN
IN SECTION B-B (BOT.)

26-S506 @ 1'-0" MAX. SPA.

26-S505 @ 1'-0" MAX. SPA.

1'-4"
BARRIER

3"

28-AS501 @ 1'-6" MAX. = 39'-6" (TOP)
69-AS1001 @ 7" MAX. =39'-6" (BOT.)

3"

SIDEWALK

TOE OF
BARRIER

STA. 33+11.00
OFFSET 16.50' LT
EL. 607.82 *

STA. 33+11.00
OFFSET 15.00' LT
EL. 607.82 *

BEGIN FORWARD APPROACH SLAB
STA. 33+11.00
EL. 608.06*

28-D807 @ 1'-6" MAX. = 39'-6"

STA. 33+11.00
OFFSET 23.50' RT
EL. 607.68 *

℄ BRG. F.A.

PLAN

B

1'-4"

2"

30'-0"

7'-0"

1'-4"

2"

28-AS501 @ 1'-6" MAX. = 39'-6" (TOP)
69-AS1001 @ 7" MAX. =39'-6" (BOT.)

AS502

TOE OF CURB PLATE

STEEL CURB PLATE
S506 S505

0.016

0.016

3"

1'-3"

3"

2" POLYSTYRENE (SEE RETAINING WALL PLANS FOR DETAILS AND PAYMENT)

RETAINING WALL (SEE RETAINING WALL PLANS FOR DETAILS)

SECTION A-A

N

SLEEPER SLAB

BULKHEAD

1'-3" 9"

3"

2'-0"

4'-0"

25'-0"

18-AS502 @ 1'-6" @ MAX. = 24'-6" (TOP)

AS501

AS1001

3" CL.

33-AS502 @ 8" = 21'-4" (BOT.)

D807

8"

6"

6"

6-AS502 @ 6" = 2'-6".

3"

2¼" ±¼"

2½"

1'-3"

SECTION B-B

LEGEND:

* = TOP OF APPROACH SLAB ELEVATION.

** = TOP OF SLEEPER SLAB ELEVATION.

△ = STATION AND ELEVATION (TOP OF BULKHEAD) SHOWN ASSUMING JOINT OPENING AT 60°F.

NOTES

1. SEE ODOT STANDARD BRIDGE DRAWING AS-1-15, AS-2-15 AND CUYAHOGA COUNTY STANDARD DRAWING AS-1C FOR INFORMATION NOT SHOWN.
2. SEE SHEETS 35/44 THROUGH 39/44, ODOT STANDARD BRIDGE DRAWING BR-2-15 AND CUYAHOGA COUNTY STANDARD DRAWING BR-2-15C FOR PARAPET AND SIDEWALK DETAILS.
3. APPROACH SLAB ELEVATIONS SHOWN REPRESENT THE TOP OF THE SLAB, NOT THE TOP OF THE SIDEWALK.
4. SEE CUYAHOGA COUNTY STANDARD DRAWING CP-1C FOR CURB PLATE DETAILS.
5. SEE SHEETS 42/44 FOR SECTIONS C-C, D-D, AND G-G.
6. TYPE 2-A CURBS ON BULKHEAD TO BE INCLUDED FOR PAYMENT WITH ITEM 526 - TYPE C INSTALLATION.

DESIGN AGENCY
BURGESS & NIPLE
100 WEST ERIE STREET
PAINESVILLE, OHIO 44077

DESIGNED	DRAWN	REVIEWED	DATE
GJL	WTB	DWL	09/2021
CHECKED	REVISED	STRUCTURE FILE NUMBER	
MAB		1876083	

FORWARD APPROACH SLAB DETAILS

BRIDGE 00.42
OVER CUYAHOGA RIVER

CUY - OLD ROCKSIDE ROAD

41/44

139/157

P:\PR57030\Cadd\Sheets\ORR_91563_0042_SM002.dwg 13-Sep-21 11:42 AM

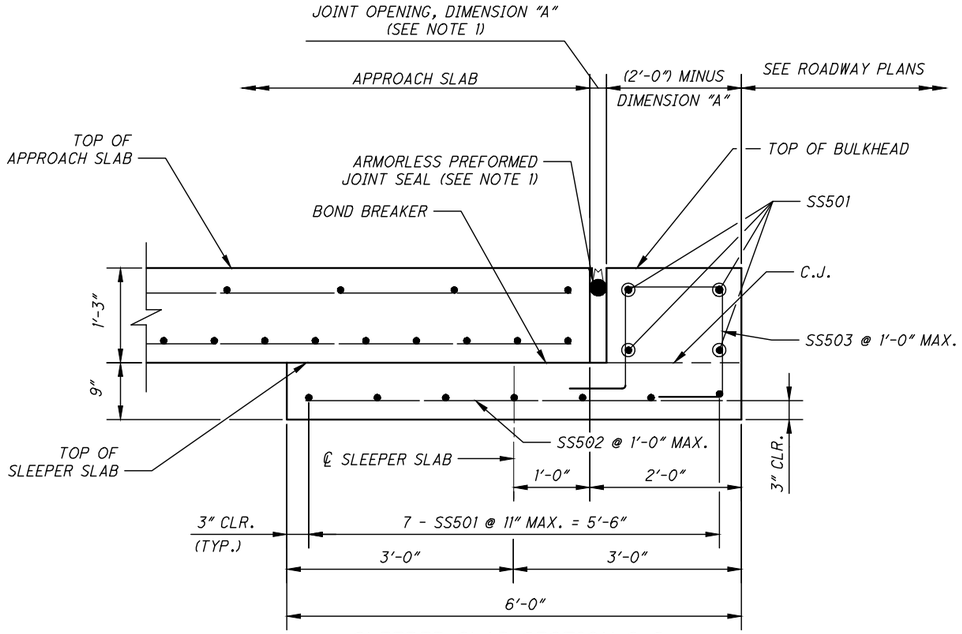

SLEEPER SLAB SECTION C-C

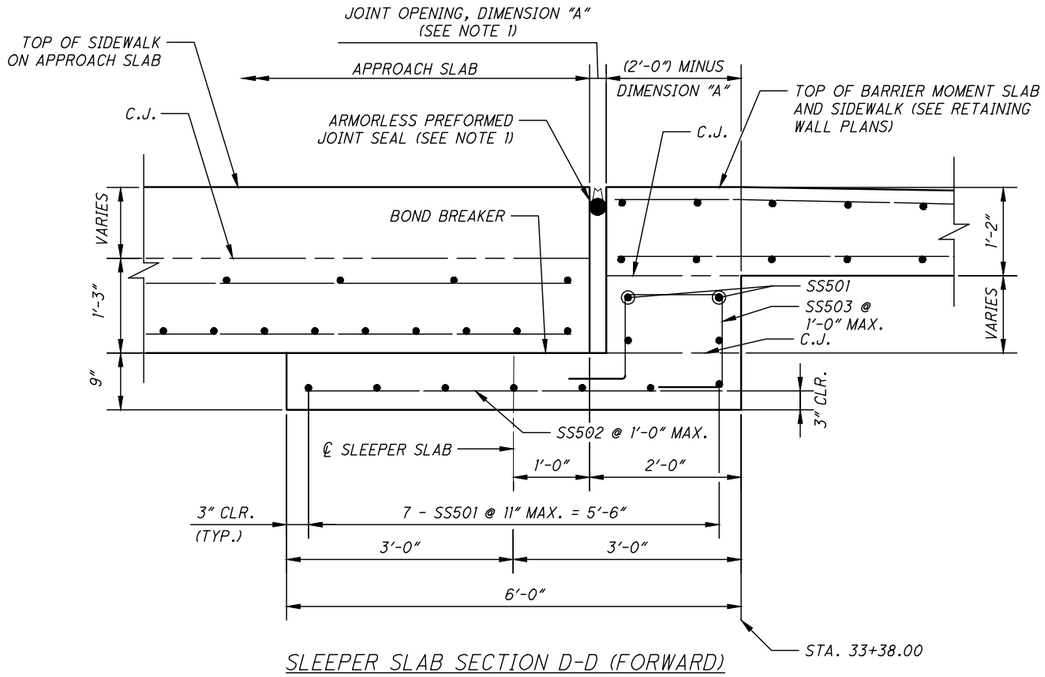

SLEEPER SLAB SECTION D-D (FORWARD)

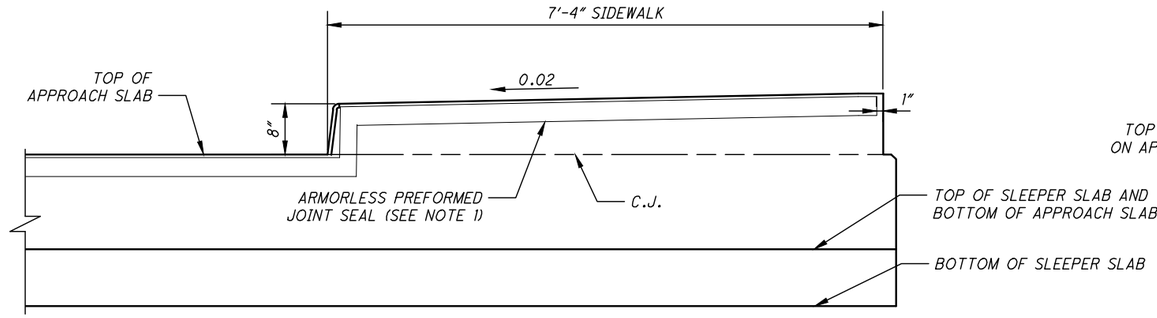

SECTION E-E (REAR)

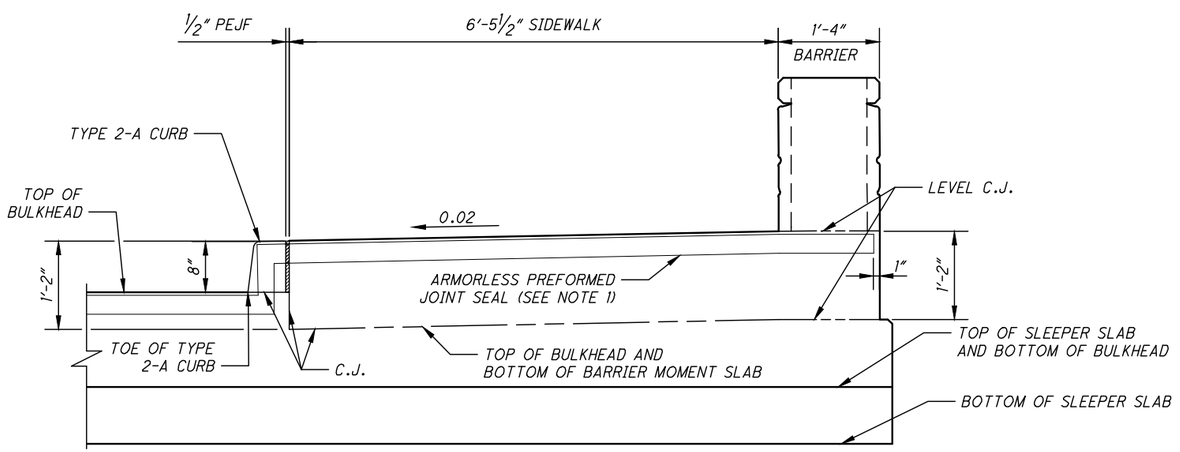

SECTION G-G (FORWARD)

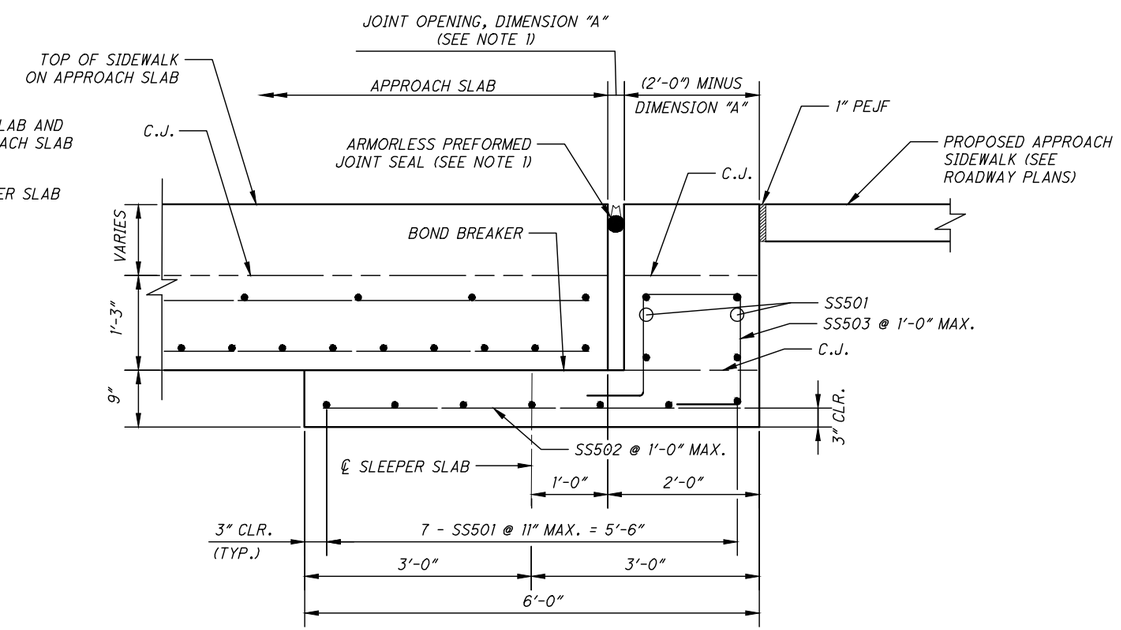

SLEEPER SLAB SECTION F-F (REAR)

NOTES:

1. SEE ODOT STANDARD BRIDGE DRAWING AS-2-15, TYPE C INSTALLATION FOR ARMORLESS PREFORMED JOINT SEAL NOTE, DIMENSION A AND OTHER NOTES AND DETAILS.
2. SEE SHEET 40/44 FOR LOCATION OF SECTIONS A-A, B-B, C-C, E-E, AND F-F.
3. SEE SHEET 41/44 FOR LOCATION OF SECTIONS A-A, B-B, C-C, D-D, AND G-G.

DESIGN AGENCY
BURGESS & NIPLE
100 WEST ERIE STREET
PAINESVILLE, OHIO 44077

DESIGNED	DRAWN	REVIEWED	DATE
GJL	WTB	DWL	09/2021
CHECKED	REVISED	STRUCTURE FILE NUMBER	
MAB		1876083	

APPROACH SLAB DETAILS
BRIDGE 00.42
OVER CUYAHOGA RIVER

CUY - OLD ROCKSIDE ROAD

42/44

140/157

P:\PR57030\Cadd\Sheets\ORR_91563_0042_SM009.dwg 13-Sep-21 11:43 AM

ABUTMENTS

MARK	NO.	LENGTH	WEIGHT (LBS)	TYPE	DIMENSIONS					
					A	B	C	D	E	INC.
A501	9	6'-1"	57	1	3'-1"	3'-1"				
A502	16	23'-1"	385	STR						
	2	14'-9"				6'-11"	6'-11"			
A503	S.O.	TO	289	18	1'-2"	TO	TO			0'-2"
	9	16'-1"				7'-7"	7'-7"			
A504	24	19'-5"	486	18	1'-2"	9'-3"	9'-3"			
A505	52	12'-0"	651	STR						
A506	3	7'-0"	22	1	3'-1"	4'-0"				
A507	8	7'-4"	61	STR						
A508	4	2'-5"	10	18	0'-8"	1'-0"	1'-0"			
A509	10	4'-2"	43	STR						
A510	6	4'-9"	30	1	2'-5"	2'-5"				
A511	2	2'-8"	6	18	0'-11"	1'-0"	1'-0"			
A512	3	2'-7"	8	STR						
A513	7	2'-5"	18	18	0'-8"	1'-0"	1'-0"			
A514	4	5'-10"	24	STR						
A515	36	5'-8"	213	1	3'-4"	2'-5"				
A801	16	24'-3"	1036	STR						
F501	241	10'-7"	2660	18	5'-8"	2'-7"	2'-7"			
F502	15	5'-1"	80	1	2'-7"	2'-7"				
F503	24	14'-8"	367	STR						
F504	16	25'-4"	423	STR						
F505	6	7'-5"	46	1	3'-9"	3'-9"				
F506	69	7'-7"	546	18	2'-8"	2'-7"	2'-7"			
F507	45	12'-11"	606	18	2'-8"	5'-3"	5'-3"			
F508	24	13'-3"	332	18	2'-8"	5'-5"	5'-5"			
F509	3	4'-6"	14	STR						
F510	31	11'-3"	364	18	1'-2"	5'-2"	5'-2"			
F511	16	24'-1"	402	STR						
F512	2	8'-8"	18	1	3'-1"	5'-8"				
F513	2	9'-6"	20	18	0'-11"	4'-5"	4'-5"			
F801	18	14'-8"	705	STR						
F802	12	25'-9"	825	STR						
F803	3	7'-5"	59	1	3'-10"	3'-10"				
F804	12	24'-5"	782	STR						
F805	1	9'-2"	24	1	3'-10"	5'-7"				
	TOTAL	WEIGHT	11612							

SEMI-INTEGRAL DIAPHRAGMS

MARK	NO.	LENGTH	WEIGHT (LBS)	TYPE	DIMENSIONS					
					A	B	C	D	E	INC.
D501	8	32'-11"	275	1	1'-0"	32'-0"				
D502	2	32'-0"	67	STR						
D503	4	39'-8"	165	STR						
D504	6	14'-3"	89	16	5'-6"	1'-4"				
D505	12	8'-7"	107	16	2'-8"	1'-4"				
D506	152	6'-9"	1070	18	2'-8"	2'-2"	2'-2"			
D507	82	7'-3"	620	18	2'-8"	2'-5"	2'-5"			
D508	2	3'-11"	8	STR						
D509	8	4'-10"	40	1	1'-0"	3'-11"				
D510	8	7'-8"	64	18	6'-3"	0'-10"	0'-10"			
D511	152	8'-5"	1334	18	2'-8"	3'-0"	3'-0"			
D512	152	9'-7"	1519	18	5'-6"	2'-2"	2'-2"			
D513	82	6'-5"	549	18	1'-10"	2'-5"	2'-5"			
D801	16	5'-10"	249	28	4'-0"	1'-0"				
D802	8	5'-10"	125	1	2'-2"	3'-11"				
D803	4	3'-11"	42	STR						
D804	4	32'-0"	342	STR						
D805	8	33'-11"	724	1	2'-2"	32'-0"				
D806	16	39'-8"	1695	STR						
D807	56	4'-11"	735	28	2'-8"	1'-5"				
	TOTAL	WEIGHT	9819							

PIERS

MARK	NO.	LENGTH	WEIGHT (LBS)	TYPE	DIMENSIONS					
					A	B	C	D	E	INC.
	16	2'-11"			2'-2"					
P301	S.O.	TO	571	99	TO					0'-1 3/8"
	23	5'-4"			4'-7"					
	2	29'-8"								
P501	S.O.	TO	1625	STR						0'-4 5/8"
	23	38'-1"								
P502	20	38'-7"	805	STR						
P503	160	10'-4"	1724	18	5'-5"	2'-7"	2'-7"			
	4	4'-11"			2'-2"					
P504	S.O.	TO	588	18	TO	1'-6"	1'-6"			0'-1 3/8"
	23	7'-4"			4'-7"					
P505	8	7'-9"	65	18	5'-0"	1'-6"	1'-6"			
P506	16	2'-6"	42	STR						
P601	92	16'-3"	2245	18	9'-7"	3'-6"	3'-6"			
P602	52	41'-3"	3222	18	34'-7"	3'-6"	3'-6"			
P603	8	15'-3"	183	18	9'-7"	3'-0"	3'-0"			
P604	12	15'-2"	273	35	4'-2"	2'-10"	1'-0"	1'-0"		
P801	92	16'-2"	3971	18	9'-7"	3'-6"	3'-6"			
P802	124	9'-8"	3200	23	1'-0"	8'-10"	0'-6"			
P803	78	24'-11"	5189	STR						
P804	10	23'-8"	632	STR						
P805	78	24'-8"	5137	STR						
P806	10	23'-5"	625	STR						
P807	72	4'-1"	785	1	1'-7"	2'-9"				
	TOTAL	WEIGHT	30882							

NOTES:

1. BAR SIZE: THE BAR SIZE IS INDICATED IN THE BAR MARK. THE MARK BEGINS WITH ONE OR TWO LETTERS THAT IDENTIFY THE BAR LOCATION. THE NEXT ONE OR TWO DIGITS IS THE BAR SIZE. THE FINAL TWO DIGITS ARE THE SEQUENCE NUMBERS.

   EXAMPLE: A501
   A = ABUTMENT
   5 = #5 BAR
   01 = SEQUENCE NUMBER

2. BAR DIMENSIONS SHOWN ARE OUT TO OUT UNLESS OTHERWISE INDICATED.
3. STR IN THE BAR TYPE COLUMN INDICATES A STRAIGHT BAR.
4. S.O. INDICATES A SERIES OF BARS.
5. INCR. INDICATES THE LENGTH OF INCREMENT FOR SERIES BARS.
6. RAD. INDICATES THE RADIUS OF A BAR.
7. ALL REINFORCING STEEL IS TO BE EPOXY COATED.

P:\PR57030\Cadd\Sheets\ORR_91563_0042_SL001.dwg 13-Sep-21 11:43 AM

DESIGN AGENCY
BURGESS & NIPLE
100 WEST ERIE STREET
PAINESVILLE, OHIO 44077

DESIGNED BCS | DRAWN KMA | REVIEWED DWL | DATE 09/2021
CHECKED MAB | REVISED | STRUCTURE FILE NUMBER 1876083

REINFORCING STEEL LIST 1 OF 2

BRIDGE 00.42
OVER CUYAHOGA RIVER

CUY - OLD
ROCKSIDE ROAD

APPROACH SLABS										
MARK	NO.	LENGTH	WEIGHT (LBS)	TYPE	DIMENSIONS					
					A	B	C	D	E	INC.
AS501	55	24'-6"	1405	STR						
AS502	89	39'-6"	3667	STR						
AS503	2	13'-6"	28	STR						
AS504	25	38'-6"	1004	STR						
AS1001	136	25'-11"	15167	19	24'-6"					
AS1002	2	14'-11"	128	19	13'-6"					
SS501	22	37'-6"	860	STR						
SS502	78	5'-6"	447	STR						
SS503	78	5'-4"	434	34	1'-5"	1'-5"	1'-4"	0'-10"	0'-10"	
	TOTAL	WEIGHT	**							

** ASXXX AND SSXXX MARKED BARS ARE INCLUDED FOR PAYMENT IN ITEM 526 - REINFORCED CONCRETE APPROACH SLABS (T=15"), AS PER PLAN

DECK AND SIDEWALK										
MARK	NO.	LENGTH	WEIGHT (LBS)	TYPE	DIMENSIONS					
					A	B	C	D	E	INC.
S401	392	30'-0"	7856	STR						
S402	49	21'-4"	698	STR						
S403	506	2'-9"	930	3	0'-8"	0'-5"	1'-6"	0'-7"		
S404	1010	6'-11"	4667	19	6'-5"					
S405	192	25'-0"	3206	STR						
S406	289	7'-10"	1512	STR						
S407	13	24'-6"	213	STR						
S408	63	29'-2"	1227	STR						
S409	1	13'-7"	9	STR						
S410	14	6'-7"	62	STR						
S411	6	5'-10"	23	16	1'-2"	1'-6"				
S501	440	30'-0"	13768	STR						
S502	55	24'-8"	1415	STR						
S503	505	40'-8"	21420	22	39'-6"					
S504	505	39'-6"	20805	STR						
S505	303	4'-7"	1448	18	1'-3"	1'-5"	2'-2"			
S506	303	4'-1"	1290	12	1'-2"	0'-2"	1'-0"	2'-2"		
	TOTAL	WEIGHT	80549							

BARRIERS										
MARK	NO.	LENGTH	WEIGHT (LBS)	TYPE	DIMENSIONS					
					A	B	C	D	E	INC.
R501	363	9'-10"	3723	34	3'-3"	3'-5"	0'-8"	1'-6"	1'-6"	
R502	24	20'-8"	517	STR						
R503	160	30'-0"	5006	STR						
R504	6	4'-6"	28	STR						
R505	20	12'-10"	268	34	4'-9"	4'-11"	0'-8"	1'-6"	1'-6"	
R506	6	5'-11"	37	1	1'-6"	4'-6"				
R507	6	5'-9"	36	1	1'-6"	4'-4"				
R508	22	6'-2"	142	20	0'-5"	1'-4"	4'-9"			
R509	22	6'-2"	142	STR						
R510	20	24'-8"	515	STR						
R511	347	7'-10"	2835	34	2'-3"	2'-5"	0'-8"	1'-6"	1'-6"	
R512	10	10'-10"	113	34	3'-9"	3'-11"	0'-8"	1'-6"	1'-6"	
R513	3	4'-11"	15	1	1'-6"	3'-6"				
R514	3	4'-9"	15	1	1'-6"	3'-4"				
R515	8	9'-8"	81	STR						
R516	8	24'-7"	205	STR						
	TOTAL	WEIGHT	*							

* RXXX MARKED BARS ARE INCLUDED FOR PAYMENT IN ITEM 517 - RAILING (CONCRETE PARAPET WITH TWIN STEEL TUBE RAILING), AS PER PLAN

NOTES:

1. BAR SIZE: THE BAR SIZE IS INDICATED IN THE BAR MARK. THE MARK BEGINS WITH ONE OR TWO LETTERS THAT IDENTIFY THE BAR LOCATION. THE NEXT ONE OR TWO DIGITS IS THE BAR SIZE. THE FINAL TWO DIGITS ARE THE SEQUENCE NUMBERS.

   EXAMPLE: A501
   A = ABUTMENT
   5 = #5 BAR
   01 = SEQUENCE NUMBER

2. BAR DIMENSIONS SHOWN ARE OUT TO OUT UNLESS OTHERWISE INDICATED.
3. STR IN THE BAR TYPE COLUMN INDICATES A STRAIGHT BAR.
4. S.O. INDICATES A SERIES OF BARS.
5. INCR. INDICATES THE LENGTH OF INCREMENT FOR SERIES BARS.
6. RAD. INDICATES THE RADIUS OF A BAR.
7. ALL REINFORCING STEEL IS TO BE EPOXY COATED.
8. STD. WRITTEN IN PLACE OF A DIMENSION INDICATES A STANDARD BEND AT THE END OF A BAR.

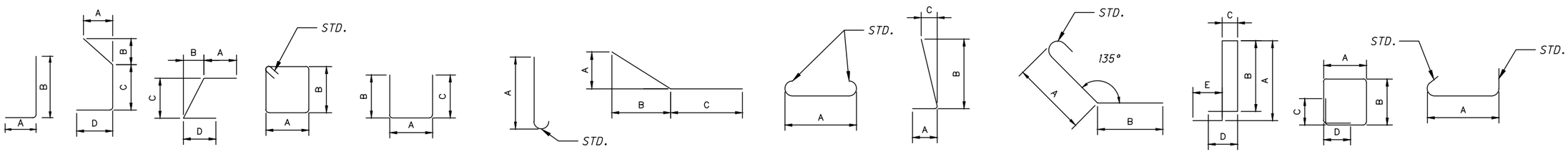

P:\PR57030\Cadd\Sheets\ORR_91563_0042_SL002.dwg 13-Sep-21 11:43 AM

DESIGN AGENCY
BURGESS & NIPLE
100 WEST ERIE STREET
PAINESVILLE, OHIO 44077

DESIGNED	DRAWN	REVIEWED	DATE
BCS	KMA	DWL	09/2021
CHECKED	REVISED	STRUCTURE FILE NUMBER	
MAB		1876083	

REINFORCING STEEL LIST 2 OF 2
BRIDGE 00.42
OVER CUYAHOGA RIVER

CUY - OLD ROCKSIDE ROAD

M-5044
RIGHT OF WAY LEGEND SHEET
CUY - OLD ROCKSIDE ROAD BRIDGE NO. 00.42

CUYAHOGA COUNTY

CITY OF INDEPENDENCE / VILLAGE OF VALLEY VIEW

ORIGINAL INDEPENDENCE TOWNSHIP

TRACT 2 & LOT 11, TRACT 3 EAST OF RIVER

SEE NOTE ON CENTERLINE PLAT REGARDING ORIGINAL LOTS AND LOCATION OF CUYAHOGA RIVER

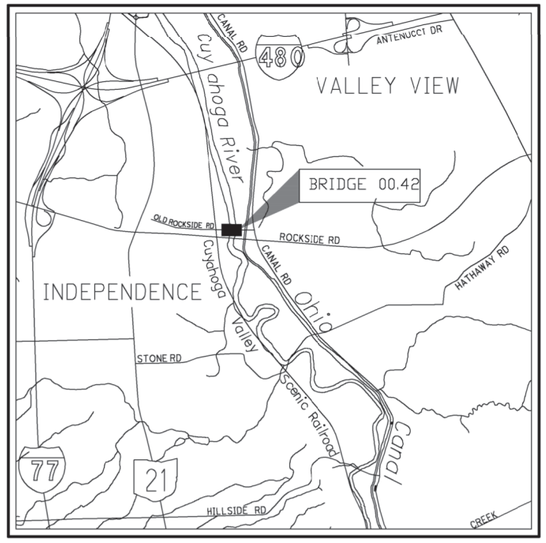

LOCATION MAP

LATITUDE: 41°39'46" N LONGITUDE: 81°62'93" W

SCALE IN MILES

0 1 2 3 4

N

PROJECT DESCRIPTION

REPLACEMENT OF THE OLD ROCKSIDE ROAD BRIDGE OVER THE CUYAHOGA RIVER. INCLUDES TEMPORARY ROAD AND RECONSTRUCTION OF THE APPROACHES.

THE EXISTING ℄ OF RIGHT-OF-WAY OF OLD ROCKSIDE ROAD WAS USED AS REFERENCE FOR THE EXISTING AND PROPOSED RIGHT-OF-WAY LINES SHOWN HEREIN.

PROJECT CONTROL

STATE PLANE GRID, OHIO STATE PLANE, NORTH ZONE, NAD83(2011)
PROJECT COORDINATES ON GROUND
COMBINED SCALE FACTOR: 0.9999621004 (GRID/GROUND)

TYPES OF TITLE LEGEND:
T = TEMPORARY EASEMENT
U = UTILITY EASEMENT
WD = WARRENTY DEED
V = IN THE NAME OF ANOTHER

INDEX OF SHEETS:

RIGHT OF WAY LEGEND SHEET	1 - 2
CENTERLINE PLAT	3
PROPERTY MAP	4
SUMMARY OF ADDITIONAL R/W	5 - 7
R/W TOPOGRAPHIC SHEETS	8, 10, 12, 14
R/W BOUNDARY SHEETS	9, 11, 13, 15

STRUCTURE KEY

RESIDENTIAL
COMMERCIAL
OUT-BUILDING

PLANS PREPARED BY:

FIRM NAME : BURGESS AND NIPLE, INC.
R/W DESIGNER: SARAH A. FLIS
R/W REVIEWER: MICHAEL D. JONES, P.S.
FIELD REVIEWER: MICHAEL D. JONES, P.S.
TRACINGS FIELD REVIEW DATE: 8/19/2020
OWNERSHIP UPDATED BY: MICHAEL D. JONES
DATE COMPLETED: 9/4/2020
PLAN COMPLETION DATE: 9/8/2020

CONVENTIONAL SYMBOLS

County Line
Township Line
Section Line
Corporation Line or
Fence Line (Ex) (Pr)
Center Line
Right of Way (Ex) Ex R/W
Right of Way (Pr) R/W
Standard Highway Ease.(Ex) Ex SH
Temporary Right of Way TMP
Channel Ease. (Pr) CH
Utility Ease. (Ex) Ex U
Railroad or
Guardrail (Ex) (Pr)
Construction Limits
Edge of Pavement (Ex)
Edge of Pavement (Pr)
Edge of Shoulder (Ex)
Edge of Shoulder (Pr)

Ditch / Creek (Ex)
Ditch / Creek (Pr)
Tree Line (Ex)
Ownership Hook Symbol , Example
Property Line Symbol , Example
Break Line Symbol , Example
Tree (Pr) , Tree (Ex) , Shrub (Ex)
Tree (Remove) , Shrub (Remove)
Evergreen (Ex) , Stump
Evergreen (Remove) , Stump (Remove)
Wetland (Pr) , Grass (Pr) , Aerial Target
Post (Ex) , Mailbox (Ex) , Mailbox (Pr) MB
Light (Ex) , Telephone Marker (Ex) HTEL
Fire Hydrant (Ex) , Water Meter (Ex)
Water Valve (Ex) , Utility Valve Unknown (Ex.)
Telephone Pole (Ex) , Power Pole (Ex)
Light Pole (Ex)

I, Steven L. Mullaney, P. S. have conducted a survey of the existing conditions for the County of Cuyahoga in Februrary to October 2019. The results of that survey are contained herein. The horizontal coordinates expressed herein are based on the Ohio State Plane Coordinates System North Zone on NAD 83 (2011) datum. The Project Coordinates (US Survey Feet) are relative to State Plane Grid Coordinates (US Survey Feet) by a Combined Scale Factor of 0.9999621004. As a part of this project I have reestablished the locations of the existing property lines and the existing centerline of Right of Way for property takes contained herein. All of my work contained herein was conducted in accordance with Ohio Administrative Code 4733-37 commonly known as "Minimum Standards for Boundary Surveys in the State of Ohio" unless noted. The words I and my as used herein are to mean either myself or someone working under my direct supervision.

Steven L. Mullaney, Professional Land Surveyor 7900 Date: 10/15/2020

SURVEYORS SEAL

STATE OF OHIO
STEVEN L. MULLANEY
S-7900
REGISTERED
PROFESSIONAL SURVEYOR

I, Michael D. Jones, P. S. have established the proposed property lines, calculated the Gross Take, present roadway occupied (PRO), Net Take and Net Residue; as well as prepared the legal descriptions necessary to acquire the parcels as shown herein. As a part of this work I have set right of way monuments at the property corners, property line intersection, points along the right of way and/or angle points on the right of way, Section Corners and other points as shown herein. All of my work contained herein was conducted in accordance with Ohio Administrative Code 4733-37 commonly known as "Minimum Standards for Boundary Surveys in the State of Ohio" unless noted. The words I and my as used herein are to mean either myself or someone working under my direct supervision.

Michael D. Jones, Professional Land Surveyor 8459 Date: 10/15/2020

SURVEYORS SEAL

STATE OF OHIO
MICHAEL DAVID JONES
S-8459
REGISTERED
PROFESSIONAL SURVEYOR

FEDERAL PROJECT NO. E120225
PID NO. 91563
CALCULATED SAF CHECKED MDJ

RIGHT OF WAY LEGEND SHEET
CUY - OLD ROCKSIDE ROAD

1 / 15
143 / 157

P:\PR57030\Cadd\Sheets\57030_RL001.dwg 13-Oct-20 6:06 PM

RIGHT OF WAY
LEGEND SHEET
CUY - OLD ROCKSIDE ROAD

UTILITY OWNERS	
TYPE	NAME & ADDRESS
WATER	CWD CLEVELAND WATER 1201 LAKESIDE AVENUE CLEVELAND, OH 44114 ATTN: FRED ROBERTS 216-664-2444 X 75556
ENGINEER	VILLAGE OF VALLEY VIEW 7979 HUB PARKWAY VALLEY VIEW, 44125 ATTN: PAUL DEY 216-642-1130 X 104
ELECTRIC	FIRST ENERGY - CEI 6896 MILLER ROAD, SUITE 101 BRECKSVILLE, OH 44141 ATTN: TED RADER, JOHN ZASSICK 440-546-8738
TELECOM-MUNICAT-IONS	LEVEL 3, CENTURY LINK 100 S. CINCINNATI AVENUE, SUITE 1200 TULSA, OK 74103 ATTN: KENDALL WILLIAMS - ZETINA 918-547-0547
TELECOM-MUNICAT-IONS	AT&T 13630 LORAIN ROAD CLEVELAND, OH 44111 ATTN: JAMES JANIS 216-476-6057
TELECOM-MUNICAT-IONS	WINDSTREAM 205 S. HAMBDEN STREET CHARDON, OH 44024 ATTN: THOMAS KULKA 440-285-5528
TELECOM-MUNICAT-IONS	WIDE OPEN WEST (WOW) 105 BLAZE INDUSTRIAL PARKWAY BEREA, OH 44017 ATTN: LARRY BURRUEL 410-915-9256

UTILITY OWNERS	
TYPE	NAME & ADDRESS
SEWER	NORTHEAST OHIO REGIONAL SEWER DISTRICT 3900 EUCLID AVENUE CLEVELAND, OH 44115 ATTN: MARY MACIEJOWSKI 216-881-6600 X 6466
CABLE	CHARTER COMMUNICATIONS 7 SEVERANCE CIRCLE CLEVELAND HEIGHTS, OH 44118 ATTN: JOSH CURTIS, PAT SANTOIEMMO
MISC.	SUNOCO PIPELINES 524 FRITZTOWN ROAD SINKING SPRINGS, PA 19608 ATTN: DEB SCHNECK 610-670-3258
TELECOM-MUNICAT-IONS	MCI - WORLDCOM 120 RAVINE STREET AKRON, OH 44303 ATTN: AL GUEST 330-253-8267
GAS	DOMINION ENERGY 320 SPRINGSIDE DRIVE, SUITE 320 AKRON, OH 44333 ATTN: BRYAN DAYTON, EVAN DEMPSEY 330-664-2409
TELECOM-MUNICAT-IONS	CROWN CASTLE 15565 NEO PARKWAY GARFIELD HEIGHTS, OH 44128 ATTN: EDWARD DALY 585-397-5988
TELECOM-MUNICAT-IONS	EVERSTREAM SOLUTIONS 1228 EUCLID AVENUE, SUITE 250 CLEVELAND, OH 44115 ATTN: ROBERT WOOD 440-728-0542
MISC.	NATIONAL PARK SERVICE 15610 VAUGHN ROAD BRECKSVILLE, OHIO 44141 ATTN: ERIC SEMPLE 440-546-5930

NOTES: THE LOCATION OF THE UNDERGROUND UTILITIES SHOWN ON THE PLANS ARE OBTAINED FROM THE OWNER OF THE UTILITIES AS REQUIRED BY SECTION 153.64 O.R.C.

P:\PR57030\Cadd\Sheets\57030_RL002.dwg 19-Apr-21 10:15 AM

M-5044
CUYAHOGA COUNTY

CITY OF INDEPENDENCE / VILLAGE OF VALLEY VIEW

ORIGINAL INDEPENDENCE TOWNSHIP

TRACT 2 & LOT 11, TRACT 3 EAST OF RIVER

CUYAHOGA COUNTY
OFFICE OF FISCAL OFFICER - 1
LPLAT 11/19/2020 8:18:45 AM
202011190138

*NOTE: DUE TO THE MULTIPLE RELOCATIONS OF THE CUYAHOGA RIVER IN THIS AREA THERE IS SIGNIFICANT DISCREPANCY AND AMBIGUITY OF THE EXACT LOCATION OF THE ORIGINAL LOT LINES IN SURVEY, DEED AND TAX MAP RECORDS, AND THEREFORE THE LOT LINES ARE NOT SHOWN. GENERALLY SPEAKING, WITHIN THIS PLAT'S LIMITS MOST RECENT SURVEY AND DEED RECORDS CONSIDER LAND ON THE NORTH SIDE OF OLD ROCKSIDE ROAD TO BE IN TRACT 2 EAST OF THE RIVER AND LAND ON THE SOUTH SIDE OF OLD ROCKSIDE ROAD TO BE IN LOT 11, TRACT 3 EAST OF THE RIVER. HOWEVER, PORTIONS OF TRACT 2, EAST OF RIVER AND LOT 11, TRACT 3 EAST OF RIVER ARE NOW LOCATED WEST OF THE CUYAHOGA RIVER AS IT IS CURRENTLY PLACED.

MONUMENT LEGEND

- M EXISTING R/W MONUMENT BOX
- M PROPOSED R/W MONUMENT BOX
- ○I.P.F. IRON PIN FOUND
- ⊙I.P.F. IRON PIN FOUND W/ ID CAP
- ●I.P.S. IRON PIN SET W/ ID CAP
- ◎P.F. IRON PIPE FOUND
- ◎P.S. IRON PIPE SET

SETTING OF ALL MONUMENTS SHALL BE PERFORMED BY A SURVEYOR REGISTERED IN THE STATE OF OHIO. THE MONUMENT ASSEMBLIES AND REFERENCE MONUMENTS WILL BE INSTALLED BY THE CONTRACTOR AT THE TIME OF CONSTRUCTION. THE IRON PIN AND CAP (WHEN REQUIRED) ARE TO BE INSTALLED BY THE CONTRACTOR'S SURVEYOR.

CHANGES OR ALTERATIONS TO THE LOCATION OF ANY MONUMENTS SHOWN IN THIS TABLE, REQUIRE PRIOR APPROVAL FROM THE CUYAHOGA COUNTY DEPARTMENT OF PUBLIC WORKS. IN THE EVENT THAT CHANGES OR ALTERATIONS ARE APPROVED, A REVISED CENTERLINE PLAT WITH THE NEW LOCATIONS SHALL BE RECORDED IN THE APPLICABLE COUNTY RECORDS AND THE OHIO DEPARTMENT OF TRANSPORTATION, SPECIFICATIONS FOR MONUMENT ASSEMBLIES, REFERENCE MONUMENTS AND RIGHT OF WAY MONUMENTS ARE SHOWN ON ODOT STANDARD CONSTRUCTION DRAWING RM-1.1.

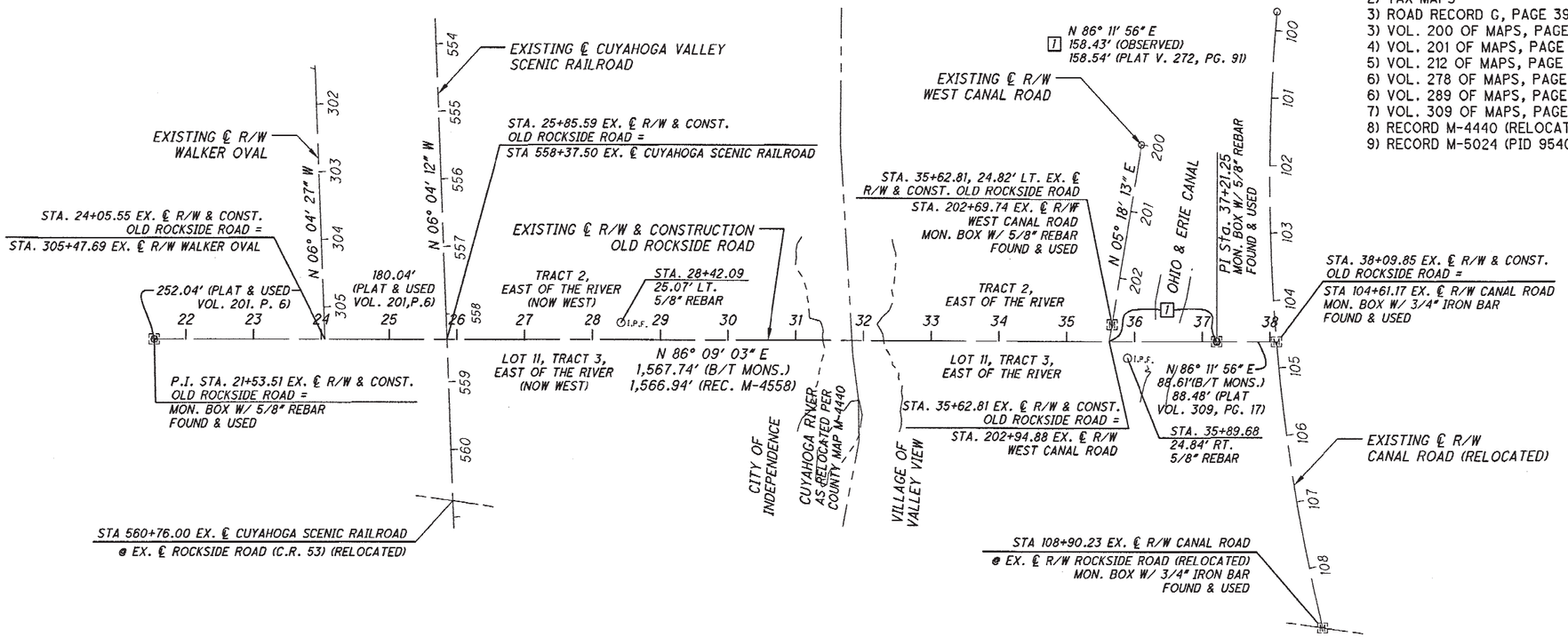

BASIS FOR BEARINGS:

ALL BEARINGS SHOWN ARE FOR PROJECT USE ONLY.
THE BASIS OF BEARINGS IS GRID NORTH ON THE OHIO STATE PLANE COORDINATE SYSTEM, NORTH ZONE, NAD83(2011) DATUM AS RESOLVED BY GPS OBSERVATIONS IN FEBRUARY 2019 AND UTILIZING THE OHIO DEPARTMENT OF TRANSPORTATION'S VIRTUAL REFERENCE SYSTEM. ALL DISTANCES RECITED ARE GROUND DISTANCES.

COMBINED SCALE FACTOR: 0.9999621004 (GRID/GROUND)

BASIS OF EXISTING RIGHT OF WAY

THE EXISTING ℄ OF RIGHT-OF-WAY OF OLD ROCKSIDE ROAD WAS USED AS REFERENCE FOR THE EXISTING AND PROPOSED RIGHT-OF-WAY LINES SHOWN HEREIN.

BASIS OF EXISTING RIGHT OF WAY THE EXISTING R/W WIDTH AND LOCATION WERE DETERMINED USING:

1) DEEDS FOUND IN CUYAHOGA COUNTY RECORDS
2) TAX MAPS
3) ROAD RECORD G, PAGE 391 (OLD ROCKSIDE, FKA HALBEISON ROAD)
3) VOL. 200 OF MAPS, PAGES 11-14 (M-4558)
4) VOL. 201 OF MAPS, PAGE 6
5) VOL. 212 OF MAPS, PAGE 42
6) VOL. 278 OF MAPS, PAGE 18
6) VOL. 289 OF MAPS, PAGE 78
7) VOL. 309 OF MAPS, PAGE 17
8) RECORD M-4440 (RELOCATION OF ROCKSIDE & CANAL ROADS)
9) RECORD M-5024 (PID 95403) RIGHT OF WAY PLANS

TRANSFER NOT REQUIRED
NOV 19 RECD
CUYAHOGA COUNTY FISCAL OFFICE

22"x34"
This Survey Plat complies with the Cuyahoga County Transfer and Conveyance Standards and is hereby approved.
Plat Vol._____ Pg._____
T.M._____
Agent 11/2/20

MONUMENT TABLE

℄ of R/W & CONST. OLD ROCKSIDE ROAD		PROJECT COORDINATES (GROUND - US FEET) *SEE PROJECT ADJ. FACTOR		MONUMENTS TO BE RESET DURING CONSTRUCTION		R/W MON. EXPECTED TO BE DISTURBED	
STATION	OFFSET	NORTH (Y)	EAST (X)	MON. ASSY.	REF. MON.	R/W MON.	DESCRIPTION
21+53.51	ON CL	630,684.64	2,206,454.79				MONBOX - 5/8" REBAR
28+42.09	25.07' LT	630,755.88	2,207,140.13			1	IPIN - 5/8" REBAR, 5" BELOW GRADE
35+62.81	24.82' LT	630,804.28	2,207,863.24	1			MONBOX - 5/8" REBAR
35+89.68	24.84' RT	630,756.26	2,207,889.38			1	IPIN - 5/8" REBAR
37+21.25	ON CL	630,789.88	2,208,018.99				MONBOX - 5/8" REBAR
38+09.85	ON CL	630,795.75	2,208,107.40				MONBOX - 3/4" IRON BAR
108+90.23	ON CL	630,378.25	2,208,204.52				MONBOX-3/4" IRON BAR (CANAL ROAD)
TOTAL CARRIED TO GENERAL SUMMARY SHEET				1		2	

RECEIVED _____, 20___
RECORDED _____, 20___
BOOK _____ PAGE _____

COUNTY RECORDER

I, Steven L. Mullaney, P. S. have conducted a survey of the existing conditions for the County of Cuyahoga in Februrary to October 2019. The results of that survey are contained herein. The horizontal coordinates expressed herein are based on the Ohio State Plane Coordinates System North Zone on NAD 83 (2011) datum. The Project Coordinates (US Survey Feet) are relative to State Plane Grid Coordinates (US Survey Feet) by a Combined Scale Factor of 0.9999621004. As a part of this project I have reestablished the locations of the existing property lines and the existing centerline of Right of Way for property takes contained herein. All of my work contained herein was conducted in accordance with Ohio Administrative Code 4733-37 commonly known as "Minimum Standards for Boundary Surveys in the State of Ohio" unless noted. The words I and my as used herein are to mean either myself or someone working under my direct supervision.

Steven L. Mullaney, Professional Land Surveyor 7900 Date: 10/15/2020

I, Michael D. Jones, P. S. have established the proposed property lines, calculated the Gross Take, present roadway occupied (PRO), Net Take and Net Residue; as well as prepared the legal descriptions necessary to acquire the parcels as shown herein. As a part of this work I have set right of way monuments at the property corners, property line intersection, points along the right of way and/or angle points on the right of way, Section Corners and other points as shown herein. All of my work contained herein was conducted in accordance with Ohio Administrative Code 4733-37 commonly known as "Minimum Standards for Boundary Surveys in the State of Ohio" unless noted. The words I and my as used herein are to mean either myself or someone working under my direct supervision.

Michael D. Jones, Professional Land Surveyor 8459 Date: 10/15/2020

SURVEYORS SEAL

STATE OF OHIO · STEVEN L. MULLANEY · S-7900 · REGISTERED PROFESSIONAL SURVEYOR

SURVEYORS SEAL

STATE OF OHIO · MICHAEL DAVID JONES · S-8459 · REGISTERED PROFESSIONAL SURVEYOR

HORIZONTAL SCALE IN FEET: 0, 50, 100, 200

PID NO. 91563

R/W DESIGNER SAF
R/W REVIEWER MDJ

CENTERLINE PLAT
CUY - OLD ROCKSIDE ROAD

3 / 15
145 / 157

P:\PR57030\Cadd\Sheets\57030_RC001.dwg 13-Oct-20 6:08 PM

CUYAHOGA COUNTY
CITY OF INDEPENDENCE/ VILLAGE OF VALLEY VIEW
ORIGINAL INDEPENDENCE TOWNSHIP
TRACT 2 & LOT 11, TRACT 3 EAST OF THE RIVER

*NOTE: PARCEL 12 DESCRIPTION DOES NOT CLOSE, ERROR APPEARS TO BE IN DIST. OF 3RD COURSE (NORTH LINE), ADJOINING PARCEL 14 AND 16 DESCRIPTIONS WERE USED BY REFERENCE TO RESOLVE BOUNDARY LINES AND MISCLOSURE.

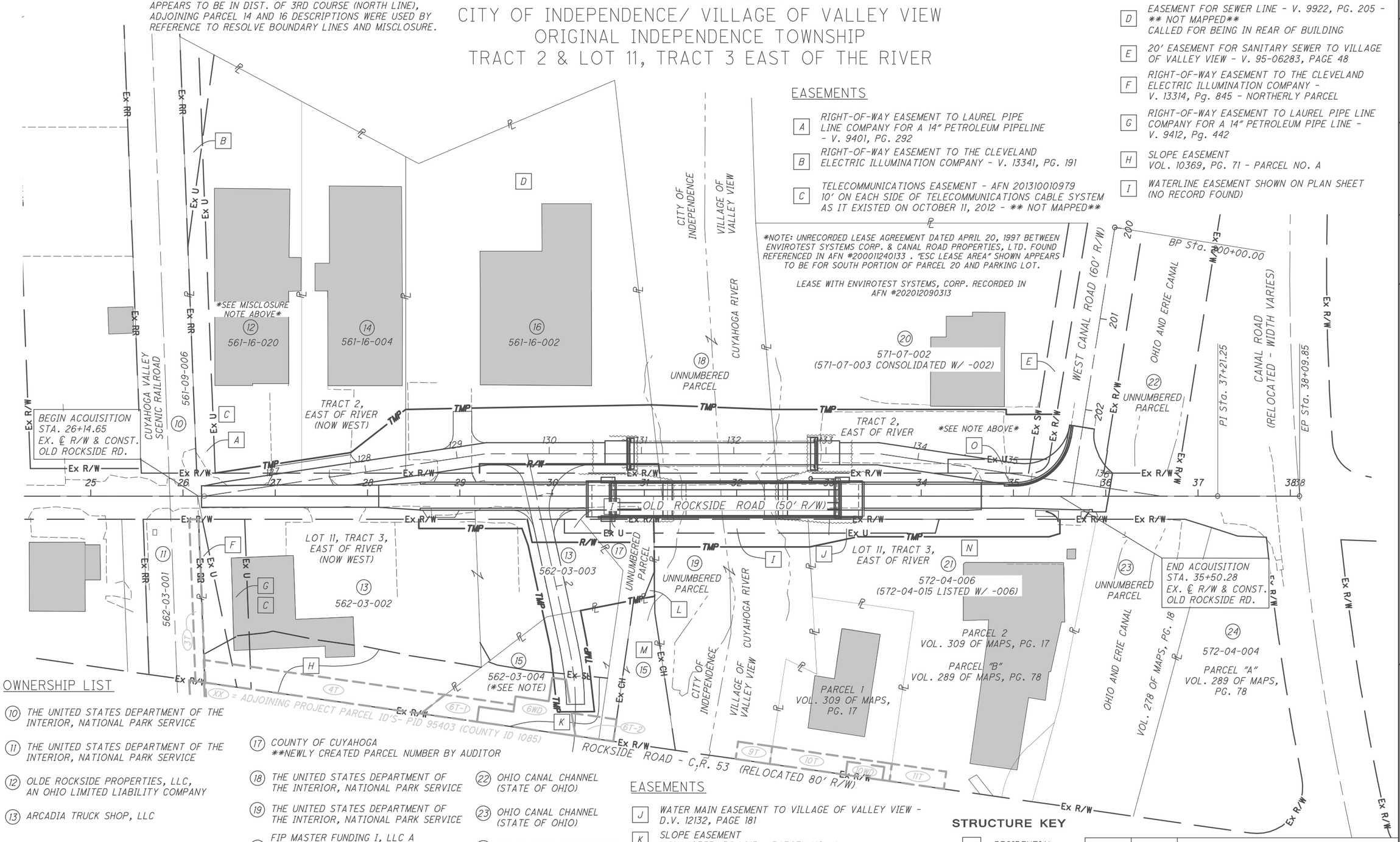

EASEMENTS

- A — RIGHT-OF-WAY EASEMENT TO LAUREL PIPE LINE COMPANY FOR A 14" PETROLEUM PIPELINE - V. 9401, PG. 292
- B — RIGHT-OF-WAY EASEMENT TO THE CLEVELAND ELECTRIC ILLUMINATION COMPANY - V. 13341, PG. 191
- C — TELECOMMUNICATIONS EASEMENT - AFN 201310010979 10' ON EACH SIDE OF TELECOMMUNICATIONS CABLE SYSTEM AS IT EXISTED ON OCTOBER 11, 2012 - ** NOT MAPPED**

EASEMENTS

- D — EASEMENT FOR SEWER LINE - V. 9922, PG. 205 - ** NOT MAPPED** CALLED FOR BEING IN REAR OF BUILDING
- E — 20' EASEMENT FOR SANITARY SEWER TO VILLAGE OF VALLEY VIEW - V. 95-06283, PAGE 48
- F — RIGHT-OF-WAY EASEMENT TO THE CLEVELAND ELECTRIC ILLUMINATION COMPANY - V. 13314, Pg. 845 - NORTHERLY PARCEL
- G — RIGHT-OF-WAY EASEMENT TO LAUREL PIPE LINE COMPANY FOR A 14" PETROLEUM PIPE LINE - V. 9412, Pg. 442
- H — SLOPE EASEMENT VOL. 10369, PG. 71 - PARCEL NO. A
- I — WATERLINE EASEMENT SHOWN ON PLAN SHEET (NO RECORD FOUND)

OWNERSHIP LIST

(10) THE UNITED STATES DEPARTMENT OF THE INTERIOR, NATIONAL PARK SERVICE

(11) THE UNITED STATES DEPARTMENT OF THE INTERIOR, NATIONAL PARK SERVICE

(12) OLDE ROCKSIDE PROPERTIES, LLC, AN OHIO LIMITED LIABILITY COMPANY

(13) ARCADIA TRUCK SHOP, LLC

(14) BTF ENTERPRISES, LLC, AN OHIO LIMITED LIABILITY COMPANY

(15) TONY IPSARO AND JOSEPHINE IPSARO (*SEE NOTE)

(16) FRANCK & FRIC, INCORPORATED

(17) COUNTY OF CUYAHOGA **NEWLY CREATED PARCEL NUMBER BY AUDITOR

(18) THE UNITED STATES DEPARTMENT OF THE INTERIOR, NATIONAL PARK SERVICE

(19) THE UNITED STATES DEPARTMENT OF THE INTERIOR, NATIONAL PARK SERVICE

(20) FIP MASTER FUNDING I, LLC A LIMITED LIABILITY COMPANY JACOB MERKLE, DECEASED

(21) THORNBURG STATION HOLDING, LLC, AN OHIO LIMITED LIABILITY COMPANY JOHN MILLE, DECEASED

(22) OHIO CANAL CHANNEL (STATE OF OHIO)

(23) OHIO CANAL CHANNEL (STATE OF OHIO)

(24) CANAL ROAD PROPERTIES

*NOTE: CUYAHOGA COUNTY AUDITOR'S LIST CURRENT OWNER FOR PPN 562-03-004 AS THE UNITED STATES OF AMERICA.

EASEMENTS

- J — WATER MAIN EASEMENT TO VILLAGE OF VALLEY VIEW - D.V. 12132, PAGE 181
- K — SLOPE EASEMENT VOL. 10357, PG. 215 - PARCEL NO. A
- L — SLOPE EASEMENT VOL. 10606, PG. 219 - PARCEL NO. A
- M — PERPETUAL EASEMENT TO RELOCATE CUYAHOGA RIVER CHANNEL V. 10357, PG. 215 - PARCEL NO. C
- N — RIGHT-OF-WAY, RECIPROCAL PARKING, & UTILITY EASEMENT AGREEMENT - AFN #200011240133
- O — GAS PIPELINE EASEMENT AFN #202009180235

STRUCTURE KEY

- RESIDENTIAL
- COMMERCIAL
- OUT-BUILDING

REV. BY	DATE	DESCRIPTION
MDJ	04/05/21	PARCEL 21-WDV REMOVED
MDJ	01/11/21	PARCEL 20-UPDATE OWNER, ADD EASEMENT, AND NEW LEASE AGREEMENT

DATE COMPLETED: 9/8/2020

HORIZONTAL SCALE IN FEET: 0, 25, 50, 100

PID NO. 91563

R/W DESIGNER SAF
R/W REVIEWER MDJ

PROPERTY MAP

CUY - OLD ROCKSIDE ROAD

4 / 15

146 / 157

P:\PR57030\Cadd\Sheets\57030_RW001.dwg 19-Apr-21 10:16 AM

TOTAL NUMBER OF :

9 OWNERSHIPS
12 PARCELS
0 TOTAL TAKES
6 OWNERSHIPS W/ STRUCTURES INVOLVED

NET TAKE = GROSS TAKE - PRO IN TAKE
NET RESIDUE = RECORD AREA - TOTAL PRO - NET TAKE
(c) = CALCULATED AREA

ALL AREAS IN ACRES

GRANTEE:
ALL RIGHT OF WAY ACQUIRED IN THE NAME OF CUYAHOGA COUNTY, OHIO, UNLESS OTHERWISE SHOWN.

* DENOTES RIGHT OF WAY ENCROACMENT

PARCEL NO.	OWNER	SHEET NO.	OWNERS RECORD	AUDITOR'S PARCEL	RECORD AREA	TOTAL P.R.O.	GROSS TAKE	P.R.O. IN TAKE	NET TAKE	STRUCTURE	NET RESIDUE LEFT	NET RESIDUE RIGHT	TYPE FUND	REMARKS	AS ACQUIRED BOOK	AS ACQUIRED PAGE
1 - 9	NOT USED															
10	THE UNITED STATES DEPARTMENT OF THE INTERIOR, NATIONAL PARK SERVICE	4,8,9	V. 87-6499, PG. 9	561-09-006	12.9164	0.000							COUNTY	NO ADDITIONAL R/W REQUIRED		
11	THE UNITED STATES DEPARTMENT OF THE INTERIOR, NATIONAL PARK SERVICE	4,8,9	V. 87-6499, PG. 9	562-03-001	7.6100	0.000								NO ADDITIONAL R/W REQUIRED		
12-T	OLDE ROCKSIDE PROPERTIES, LLC, AN OHIO LIMITED LIABILITY COMPANY	4,8,9	200308121060	561-16-020	1.1428	0.0000	0.0151	0.0000	0.0151	YES				TO CONSTRUCT TEMPORARY BRIDGE APPROACH & RECONSTRUCT DRIVEWAY TEMPORARY IMPACT APPROX. (1) UNMARKED PARKING SPACE CURRENT DEED DESC. DOES NOT CLOSE, SEE NOTE ON PROPERTY MAP.		
13-WDV	ARCADIA TRUCK SHOP, LLC	4,8-11	200402200829	562-03-002	1.4957(c)	0.1722	0.0000	0.0000	0.0000					IN THE NAME OF CITY OF INDEPENDENCE		
				562-03-003	0.4952(c)	0.1112	0.1488	0.1112	0.0376					TAKE (1) TREE		
	TOTAL 13-WDV				1.9909	0.2834	0.1488	0.1112	0.0376			1.6699				
13-T		4,8-11		562-03-002	1.4957(c)	0.1722	0.0141	0.0000	0.0141	YES				TO RECONSTRUCT DRIVEWAY & COMPLETE GRADING		
				562-03-003	0.4952(c)	0.1112	0.1659	0.0000	0.1659					SIGN & GATE W/ POSTS (PARK DRIVE) TO BE RELOCATED		
	TOTAL 13-T				1.9909	0.2834	0.1800	0.0000	0.1800							
14-T	BTF ENTERPRISES, LLC, AN OHIO LIMITED LIABILITY COMPANY	4,8,9	201308210649	561-16-004	0.9663	0.0000	0.0844	0.0000	0.0844	YES				TO CONSTRUCT TEMPORARY BRIDGE APPROACH & RECONSTRUCT DRIVEWAY TEMPORARY IMPACT (2) PARKING SPACES		
15-T	TONY IPSARO AND JOSEPHINE IPSARO	4,8,9 14,15	V. 13389, PG. 205	562-03-004	0.5636(c)	0.000	0.0980	0.0000	0.0980	-				TO RECONSTRUCT DRIVEWAY AREA OVERLAP W/ EX. SLOPE EASE. = 0.0369 AC. TITLE DEFECT (SEE TITLE REPORT), AUDITOR'S RECORDS LIST OWNER AS UNITED STATES OF AMERICA		

TYPES OF TITLE LEGEND:
T = TEMPORARY EASEMENT
U = UTILITY EASEMENT
WD = WARRENTY DEED
V = IN THE NAME OF ANOTHER

NOTE: ALL TEMPORARY PARCELS TO BE OF 24 MONTH DURATION.

NOTE: UNDER NO CIRCUMSTANCES ARE THE TEMPORARY EASEMENTS TO BE USED FOR STORAGE OF MATERIAL OR EQUIPMENT BY THE CONTRACTOR UNLESS NOTED OTHERWISE

REV. BY	DATE	DESCRIPTION
MDJ	04/16/21	TOTAL NO. OF PARCELS UPDATED
FIELD REVIEW BY: MICHAEL JONES, P.S.		DATE: 8/19/2020
OWNERSHIP VERIFIED BY: MICHAEL JONES		DATE: 9/4/2020
DATE COMPLETED: 9/8/2020		

FEDERAL PROJECT NO. E120225
PID NO. 91563
STATE JOB NO. 520438
R/W DESIGNER SAF
R/W REVIEWER MDJ

SUMMARY OF ADDITIONAL RIGHT OF WAY - PARCELS 10-15

CUY - OLD ROCKSIDE ROAD

5 / 15

147 / 157

P:\PR57030\Cadd\Sheets\57030_RS001.dwg 19-Apr-21 10:16 AM

NET TAKE = GROSS TAKE - PRO IN TAKE
NET RESIDUE = RECORD AREA - TOTAL PRO - NET TAKE
(c) = CALCULATED AREA

ALL AREAS IN ACRES

GRANTEE:
ALL RIGHT OF WAY ACQUIRED IN THE NAME OF CUYAHOGA COUNTY, OHIO, UNLESS OTHERWISE SHOWN.

* DENOTES RIGHT OF WAY ENCROACMENT

PARCEL NO.	OWNER	SHEET NO.	OWNERS RECORD	AUDITOR'S PARCEL	RECORD AREA	TOTAL P.R.O.	GROSS TAKE	P.R.O. IN TAKE	NET TAKE	STRUC-TURE	NET RESIDUE		TYPE FUND	REMARKS	AS ACQUIRED	
											LEFT	RIGHT			BOOK	PAGE
16-WDV	FRANCK & FRIC, INCORPORATED	4,8-11	V. 9062, PG. 77	561-16-002	2.4900(c)	0.2884	0.3331	0.2884	0.0447	-	2.1569		COUNTY	IN THE NAME OF THE CITY OF INDEPENDENCE		
														TAKE (1) TREE		
16-T		4,8-11		561-16-002	2.4900(c)	0.2884	0.4000	0.0000	0.4000	YES				TO CONSTRUCT TEMPORARY BRIDGE, APPROACH, &		
														RECONSTRUCT DRIVEWAY		
														TEMPORARY IMPACT APPROX. (5) UNMARKED PARKING		
														SPACES		
														TAKE 124 L.F. SPLIT RAIL FENCE, FLAG POLE,		
														GROUND LIGHT, (6) TREES		
17-WDV	COUNTY OF CUYAHOGA	4,8-11	V. 10357, PG. 215	UNNUMBERED	0.1545 (c)	0.000	0.0397	0.0000	0.0397	-		0.1148		IN THE NAME OF THE CITY OF INDEPENDENCE		
			V. 10606, PG. 219	PARCEL										TAKE (1) TREE		
18-T	THE UNITED STATES DEPARTMENT OF THE	4,10,11	V. 87-6499, PG. 9	UNNUMBERED	N/A	0.000	0.2102	0.000	0.2102	-				TO CONSTRUCT TEMPORARY AND PERMANENT BRIDGES		
	INTERIOR, NATIONAL PARK SERVICE			PARCEL												
19-T	THE UNITED STATES DEPARTMENT OF THE	4,10,11	V. 87-6499, PG. 9	UNNUMBERED	N/A	0.000	0.1156	0.000	0.1156	-				TO CONSTRUCT TEMPORARY AND PERMANENT BRIDGES		
	INTERIOR, NATIONAL PARK SERVICE			PARCEL										TAKE (2) TREES		
20-T	FIP MASTER FUNDING I, LLC, A DELAWARE	4,10-13	202012090312	571-07-002	2.5900	0.000	0.4697	0.000	0.4697	YES				TITLE DEFECT, SEE PROJECT TITLE REPORT		
	LIMITED LIABILITY COMPANY			571-07-003	LISTED W/ -002									TO CONSTRUCT TEMPORARY BRIDGE, APPROACH, &		
	JACOB MERKLE, DECEASED		V. 237, PG. 568											RECONSTRUCT PARKING LOT		
														TEMPORARY IMPACT PARKING LOT - (36) PARKING SPACES		
														TAKE (5) TREES , CUYAHOGA VALLEY SCENIC RR SIGN (TBR)		
														AREA OVERLAP W/ EX. SAN. SEWER EASE. = 0.0284 ACRES		
														AREA OVERLAP W/ EX. GAS PIPELINE EASE.=0.0363 ACRES		
														SUBJECT TO UNRECORDED LEASE AGREEMENT DATED		
														4/20/1997 WITH CANAL ROAD PROP., LTD. FOUND		
														REFERENCED IN AFN #200011240133.		
														SUBJECT TO LEASE AGREEMENT W/ ENVIROTEST SYSTEMS,		
														CORP. RECORDED IN AFN #2020012090313		

TYPES OF TITLE LEGEND:
T = TEMPORARY EASEMENT
U = UTILITY EASEMENT
WD = WARRENTY DEED
V = IN THE NAME OF ANOTHER

NOTE: ALL TEMPORARY PARCELS TO BE OF 24 MONTH DURATION.

NOTE: UNDER NO CIRCUMSTANCES ARE THE TEMPORARY EASEMENTS TO BE USED FOR STORAGE OF MATERIAL OR EQUIPMENT BY THE CONTRACTOR UNLESS NOTED OTHERWISE

REV. BY	DATE	DESCRIPTION
MDJ	01/11/21	PARCEL 20-UPDATE OWNER, ADD EASEMENT, AND NEW LEASE AGREEMENT
FIELD REVIEW BY: MICHAEL JONES, P.S.		DATE: 8/19/2020
OWNERSHIP VERIFIED BY: MICHAEL JONES		DATE: 9/4/2020
DATE COMPLETED: 9/8/2020		

FEDERAL PROJECT NO. E120225
PID NO. 91563
STATE JOB NO. 520438
R/W DESIGNER SAF
R/W REVIEWER MDJ

SUMMARY OF ADDITIONAL RIGHT OF WAY - PARCELS 16-20

CUY - OLD ROCKSIDE ROAD

P:\PRS7030\Cadd\Sheets\57030_RS002.dwg 19-Apr-21 10:17 AM

NET TAKE = GROSS TAKE - PRO IN TAKE
NET RESIDUE = RECORD AREA - TOTAL PRO - NET TAKE
(c) = CALCULATED AREA

ALL AREAS IN ACRES

GRANTEE:
ALL RIGHT OF WAY ACQUIRED IN THE NAME OF
CUYAHOGA COUNTY, OHIO, UNLESS OTHERWISE SHOWN.

* DENOTES RIGHT OF WAY ENCROACMENT

PARCEL NO.	OWNER	SHEET NO.	OWNERS RECORD	AUDITOR'S PARCEL	RECORD AREA	TOTAL P.R.O.	GROSS TAKE	P.R.O. IN TAKE	NET TAKE	STRUC-TURE	NET RESIDUE LEFT	NET RESIDUE RIGHT	TYPE FUND	REMARKS	AS ACQUIRED BOOK	AS ACQUIRED PAGE
21-T	THORNBURG STATION HOLDING, LLC, AN	4,10-13	201510210847	572-04-006	1.4768	0.000	0.1251	0.0000	0.1251	YES			COUNTY	TITLE DEFECT, SEE PROJECT TITLE REPORT		
	OHIO LIMITED LIABILITY COMPANY			572-04-015	LISTED W/ -006									TO COMPLETE GRADING, UTILITY WORK, AND		
														TO CONSTRUCT RETAINING WALL AND PERMANENT BRIDGE		
	JOHN MILLE, DECEASED		V. 14680, PG. 773											AND SLOPE PROTECTION		
			V. 12765, PG. 647											TAKE TREE, TEMPORARY IMPACT (26) PARKING SPACES		
														*LIGHT POLE, (6) PRIVATE SIGNS, (4) SPRINKLER HEADS,		
														*SPRINKLER CONTROL VALVE BOX		
														AREA OVERLAP W/ EX. WATERLINE EASE. = 0.0481 ACRES		
														AREA OVERLAP W/ EX. R/W, PARKING, & UTILITY EASE.		
														= 0.1251 ACRES		
22	OHIO CANAL CHANNEL	4,12,13	N/A	UNNUMBERED	N/A									NO ADDITIONAL R/W REQUIRED		
	(STATE OF OHIO)			PARCEL												
23	OHIO CANAL CHANNEL	4,12,13	N/A	UNNUMBERED	N/A									NO ADDITIONAL R/W REQUIRED		
	(STATE OF OHIO)			PARCEL												
24	CANAL ROAD PROPERTIES	4,12,13	200010020416	572-04-004	0.9018	0.0000								NO ADDITIONAL R/W REQUIRED		

CUYAHOGA COUNTY
CITY OF INDEPENDENCE
ORIGINAL INDEPENDENCE TOWNSHIP
TRACT 2 & LOT 11, TRACT 3 EAST OF RIVER

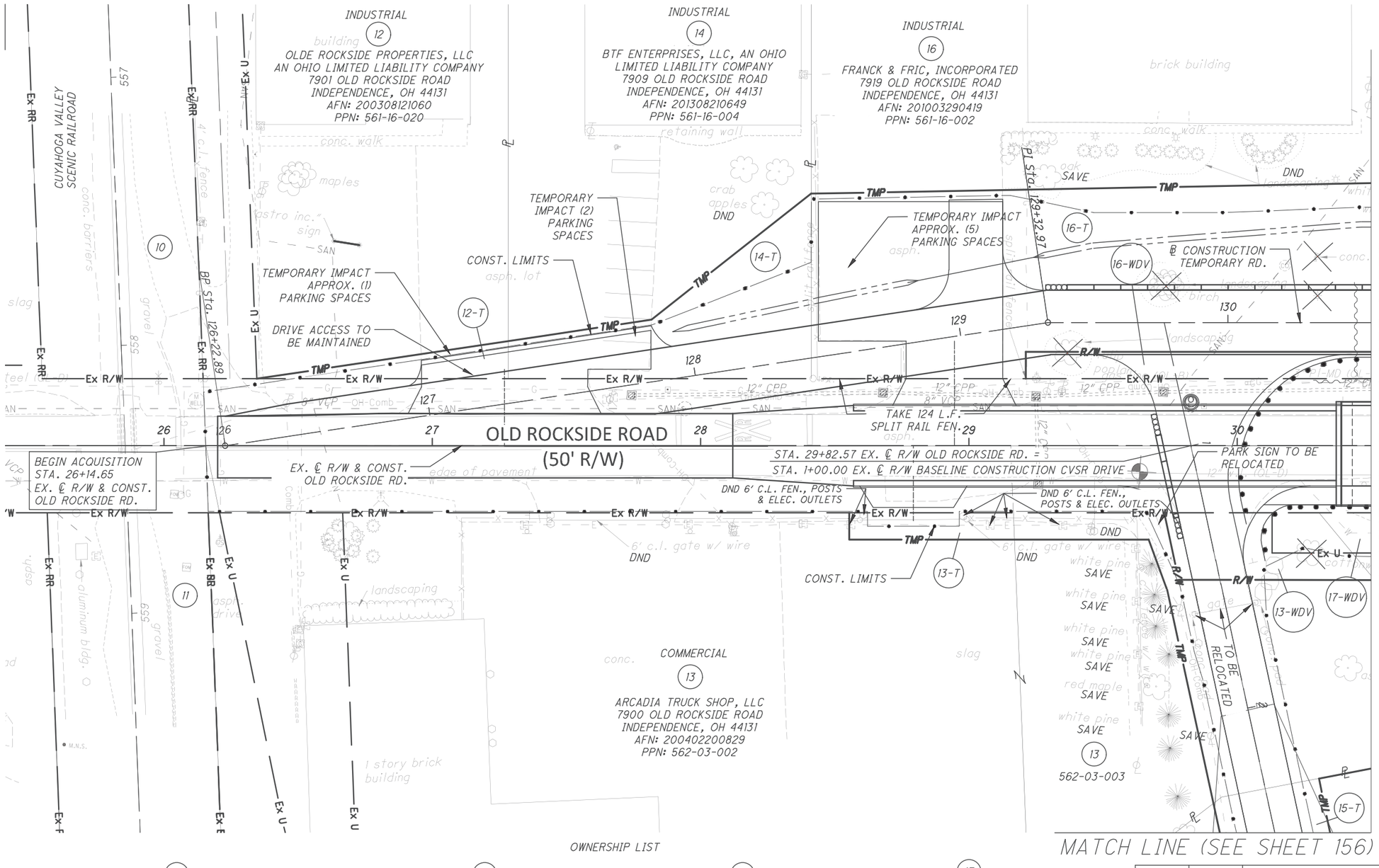

REV. BY	DATE	DESCRIPTION

DATE COMPLETED: 9/8/2020

HORIZONTAL SCALE IN FEET
0 10 20 40

PID NO. 91563

R/W DESIGNER SAF
R/W REVIEWER MDJ

CUY - OLD ROCKSIDE ROAD

RIGHT OF WAY TOPO SHEET
BEGIN ACQUISITION TO STA. 30+50

8 / 15

150 / 157

P:\PR57030\Cadd\Sheets\57030_RT001.dwg 19-Apr-21 10:18 AM

CUYAHOGA COUNTY
CITY OF INDEPENDENCE
ORIGINAL INDEPENDENCE TOWNSHIP
TRACT 2 & LOT 11, TRACT 3 EAST OF THE RIVER

EASEMENTS

- [A] RIGHT-OF-WAY EASEMENT TO LAUREL PIPE LINE COMPANY FOR A 14" PETROLEUM PIPELINE - V. 9401, PG. 292
- [C] TELECOMMUNICATIONS EASEMENT - AFN 201310010979 10' ON EACH SIDE OF TELECOMMUNICATIONS CABLE SYSTEM AS IT EXISTED ON OCTOBER 11, 2012 - ** NOT MAPPED**
- [F] RIGHT-OF-WAY EASEMENT TO THE CLEVELAND ELECTRIC ILLUMINATION COMPANY - V. 13314, Pg. 845 - NORTHERLY PARCEL
- [G] RIGHT-OF-WAY EASEMENT TO LAUREL PIPE LINE COMPANY FOR A 14" PETROLEUM PIPE LINE - V. 9412, Pg. 442
- [I] WATERLINE EASEMENT SHOWN ON PLAN SHEET (NO RECORD FOUND)

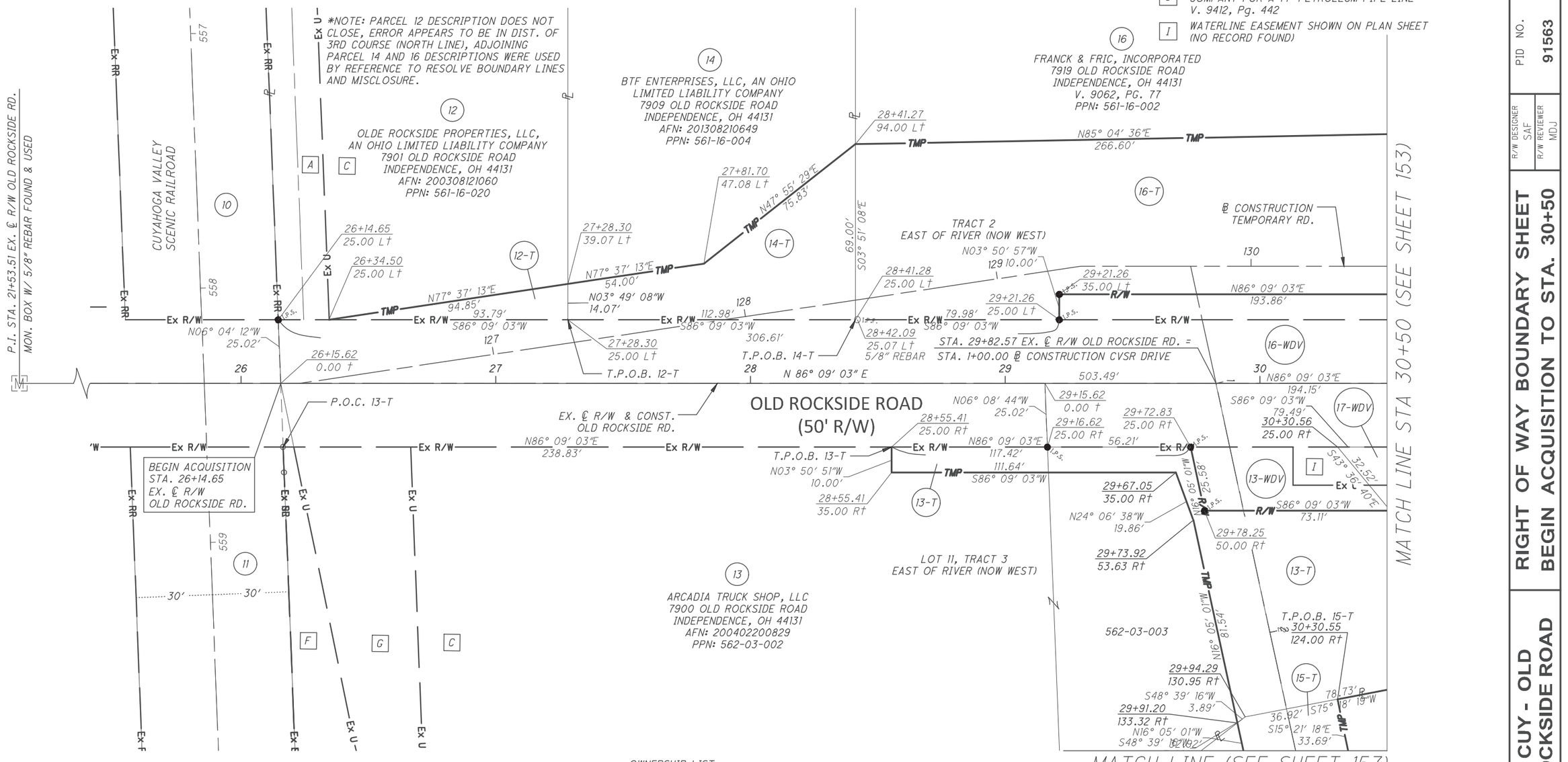

OWNERSHIP LIST

(10) THE UNITED STATES DEPARTMENT OF THE INTERIOR, NATIONAL PARK SERVICE INDEPENDENCE, OH 44131 VOL. 87-6499 PG. 9 PPN: 561-09-006

(11) THE UNITED STATES DEPARTMENT OF THE INTERIOR, NATIONAL PARK SERVICE INDEPENDENCE, OH 44131 VOL. 87-6499, PG. 9 PPN: 562-03-001

(15) TONY IPSARO AND JOSEPHINE IPSARO INDEPENDENCE, OH 44131 VOL. 13389, PG. 205 PPN: 562-03-004 (*SEE NOTE)

(17) COUNTY OF CUYAHOGA INPEPENDENCE, OH 44131 VOL. 10606, PG. 219 VOL. 10357, PG. 215 UNNUMBERED PARCEL

*NOTE: CUYAHOGA COUNTY AUDITOR'S LIST CURRENT OWNER FOR PPN 562-03-004 AS THE UNITED STATES OF AMERICA.

REV. BY	DATE	DESCRIPTION

DATE COMPLETED: 9/8/2020

HORIZONTAL SCALE IN FEET: 0, 10, 20, 40

PID NO. 91563

R/W DESIGNER SAF
R/W REVIEWER MDJ

RIGHT OF WAY BOUNDARY SHEET
BEGIN ACQUISITION TO STA. 30+50
CUY - OLD ROCKSIDE ROAD

9 / 15
151 / 157

P:\PR57030\Cadd\Sheets\57030_RB001.dwg 19-Apr-21 10:18 AM

CUYAHOGA COUNTY
CITY OF INDEPENDENCE/ VILLAGE OF VALLEY VIEW
ORIGINAL INDEPENDENCE TOWNSHIP
TRACT 2 & LOT 11, TRACT 3 EAST OF RIVER

*NOTE: UNRECORDED LEASE AGREEMENT DATED APRIL 20, 1997 BETWEEN ENVIROTEST SYSTEMS CORP. & CANAL ROAD PROPERTIES, LTD. FOUND REFERENCED IN AFN #200011240133. "ESC LEASE AREA" SHOWN APPEARS TO BE FOR SOUTH PORTION OF PARCEL 20 AND PARKING LOT.

LEASE WITH ENVIROTEST SYSTEMS, CORP. RECORDED IN AFN #202012090313

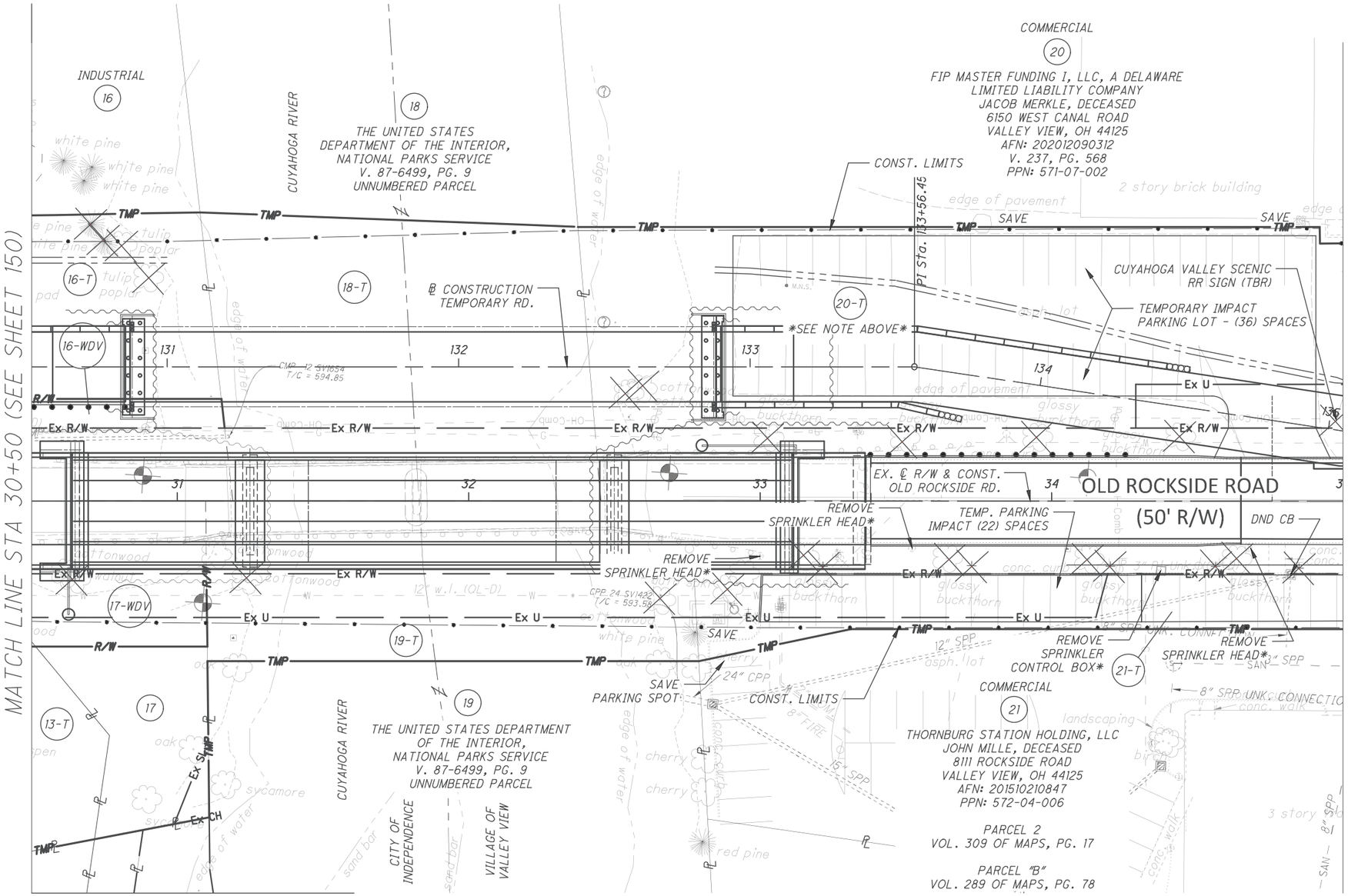

OWNERSHIP LIST

16
FRANCK & FRIC INCORPORATED 7919 OLD ROCKSIDE ROAD INDEPENDENCE, OH 44131 AFN: 201003290419 PPN: 561-16-002

17
COUNTY OF CUYAHOGA INPEPENDENCE, OH 44131 VOL. 10606, PG. 219 VOL. 10357, PG. 215 UNNUMBERED PARCEL

REV. BY	DATE	DESCRIPTION
MDJ	04/16/21	PARCEL 21-WDV REMOVED, 21-T UPDATED
MDJ	01/11/21	PARCEL 20-UPDATE OWNER, ADD LEASE

DATE COMPLETED: 9/8/2020

HORIZONTAL SCALE IN FEET
0 10 20 40

PID NO. 91563

R/W DESIGNER SAF
R/W REVIEWER MDJ

RIGHT OF WAY TOPO SHEET
STA. 30+50 TO STA. 35+00

CUY - OLD ROCKSIDE ROAD

10 / 15

152 / 157

P:\PR57030\Cadd\Sheets\57030_RT002.dwg 19-Apr-21 10:19 AM

CUYAHOGA COUNTY
CITY OF INDEPENDENCE/ VILLAGE OF VALLEY VIEW
ORIGINAL INDEPENDENCE TOWNSHIP
TRACT 2 & LOT 11, TRACT 3 EAST OF RIVER

*NOTE: UNRECORDED LEASE AGREEMENT DATED APRIL 20, 1997 BETWEEN ENVIROTEST SYSTEMS CORP. & CANAL ROAD PROPERTIES, LTD. FOUND REFERENCED IN AFN #200011240133 . "ESC LEASE AREA" SHOWN APPEARS TO BE FOR SOUTH PORTION OF PARCEL 20 AND PARKING LOT.

LEASE WITH ENVIROTEST SYSTEMS, CORP. RECORDED IN AFN #202012090313.

EASEMENTS

- [I] WATERLINE EASEMENT SHOWN ON PLAN SHEET (NO RECORD FOUND)
- [J] WATER MAIN EASEMENT TO VILLAGE OF VALLEY VIEW - D.V. 12132, PAGE 181
- [L] SLOPE EASEMENT VOL. 10606, PG. 219 - PARCEL NO. A
- [M] PERPETUAL EASEMENT TO RELOCATE CUYAHOGA RIVER CHANNEL V. 10357, PG. 215 - PARCEL NO. C
- [N] RIGHT-OF-WAY, RECIPROCAL PARKING, & UTILITY EASEMENT AGREEMENT - AFN #200011240133
- [O] GAS PIPELINE EASEMENT AFN #202009180235

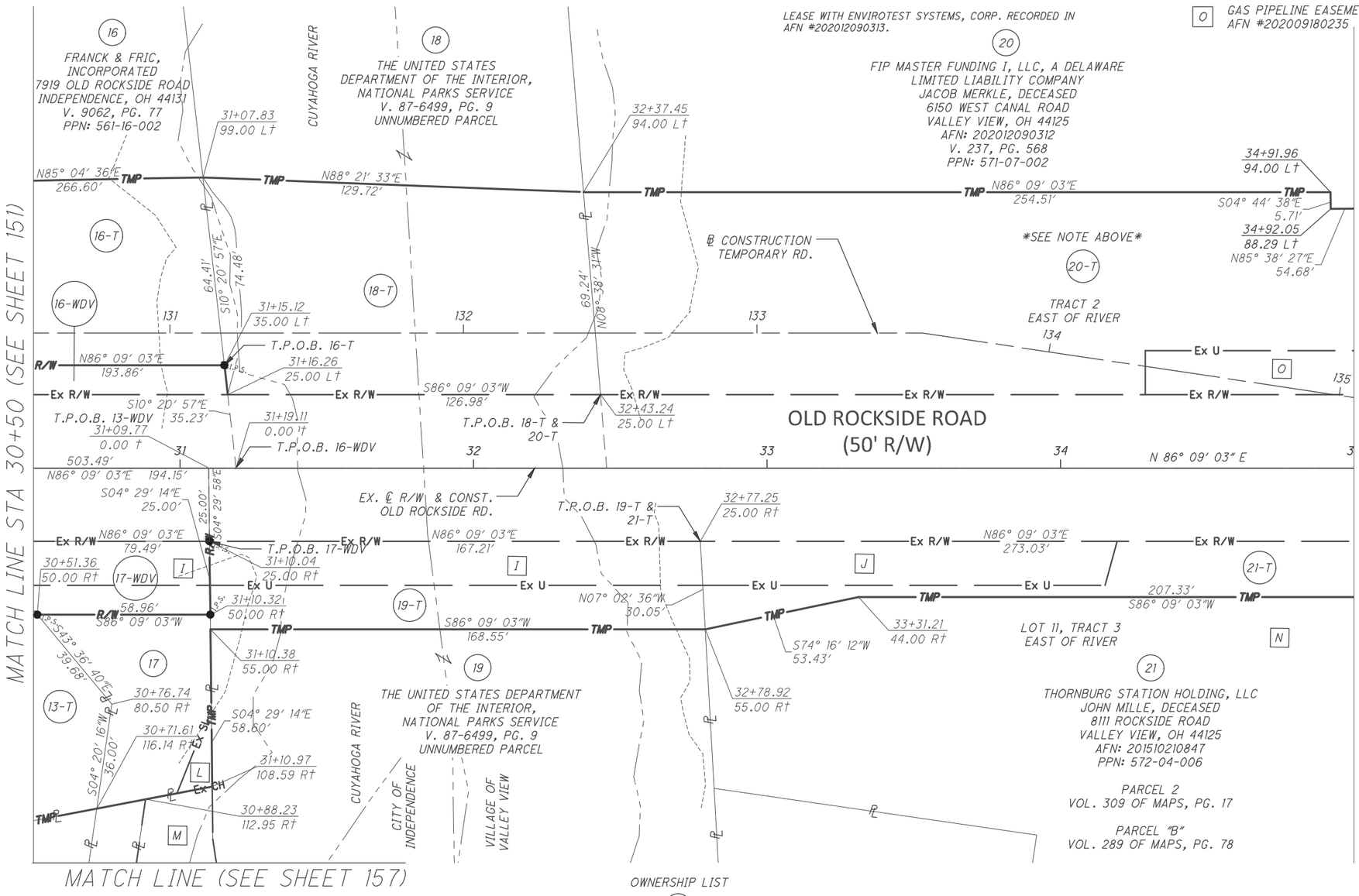

OWNERSHIP LIST

17

COUNTY OF CUYAHOGA
INPEPENDENCE, OH 44131
VOL. 10606, PG. 219
VOL. 10357, PG. 215
UNNUMBERED PARCEL

REV. BY	DATE	DESCRIPTION
MDJ	04/16/21	PARCEL 21-WDV REMOVED, 21-T UPDATED
MDJ	01/11/21	PARCEL 20-UPDATE OWNER, ADD EASEMENT, AND NEW LEASE AGREEMENT

DATE COMPLETED: 9/8/2020

HORIZONTAL SCALE IN FEET: 0, 10, 20, 40

PID NO. 91563

R/W DESIGNER SAF
R/W REVIEWER MDJ

RIGHT OF WAY BOUNDARY SHEET
STA. 30+50 TO STA. 35+00

CUY - OLD ROCKSIDE ROAD

11 / 15

153 / 157

P:\PR57030\Cadd\Sheets\57030_RB002.dwg 19-Apr-21 10:20 AM

CUYAHOGA COUNTY
VILLAGE OF VALLEY VIEW
ORIGINAL INDEPENDENCE TOWNSHIP
TRACT 2 & LOT 11, TRACT 3 EAST OF RIVER

**NOTE: UNRECORDED LEASE AGREEMENT DATED APRIL 20, 1997 BETWEEN ENVIROTEST SYSTEMS CORP. & CANAL ROAD PROPERTIES, LTD. FOUND REFERENCED IN AFN #200011240133. "ESC LEASE AREA" SHOWN APPEARS TO BE FOR SOUTH PORTION OF PARCEL 20 AND PARKING LOT.*

LEASE WITH ENVIROTEST SYSTEMS, CORP. RECORDED IN AFN #202012090313

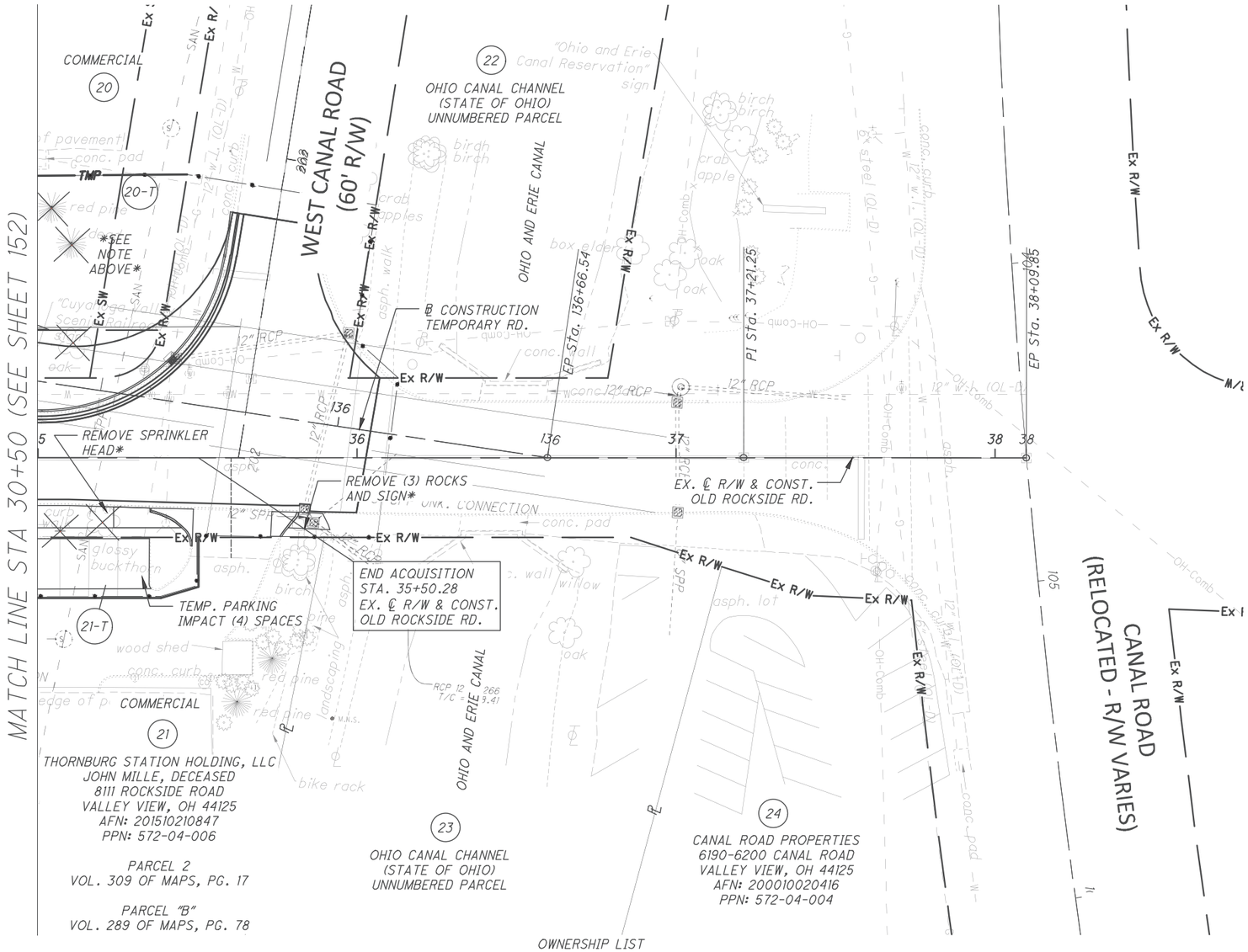

OWNERSHIP LIST

20

FIP MASTER FUNDING I, LLC, A DELAWARE LIMITED LIABILITY COMPANY
JACOB MERKLE, DECEASED
6150 WEST CANAL ROAD
VALLEY VIEW, OH 44125
AFN: 202012090312
V. 237, PG. 568
PPN: 571-07-002

REV. BY	DATE	DESCRIPTION
MDJ	01/11/21	PARCEL 20-UPDATE OWNER, ADD LEASE

DATE COMPLETED: 9/8/2020

HORIZONTAL SCALE IN FEET: 0, 10, 20, 40

PID NO. 91563

R/W DESIGNER SAF
R/W REVIEWER MDJ

RIGHT OF WAY TOPO SHEET
STA. 30+50 TO END ACQUISITION

CUY - OLD ROCKSIDE ROAD

12 / 15

154 / 157

P:\PR57030\Cadd\Sheets\57030_RT003.dwg 19-Apr-21 10:21 AM

CUYAHOGA COUNTY
VILLAGE OF VALLEY VIEW
ORIGINAL INDEPENDENCE TOWNSHIP
TRACT 2 & LOT 11, TRACT 3 EAST OF RIVER

*NOTE: UNRECORDED LEASE AGREEMENT DATED APRIL 20, 1997 BETWEEN ENVIROTEST SYSTEMS CORP. & CANAL ROAD PROPERTIES, LTD. FOUND REFERENCED IN AFN #200011240133. "ESC LEASE AREA" SHOWN APPEARS TO BE FOR SOUTH PORTION OF PARCEL 20 AND PARKING LOT.

LEASE WITH ENVIROTEST SYSTEMS, CORP. RECORDED IN AFN #202012090313.

EASEMENTS

- [N] RIGHT-OF-WAY, RECIPROCAL PARKING, & UTILITY EASEMENT AGREEMENT - AFN #200011240133
- [E] 20' EASEMENT FOR SANITARY SEWER TO VILLAGE OF VALLEY VIEW - V. 95-06283, PAGE 48
- [O] GAS PIPELINE EASEMENT AFN #202009180235

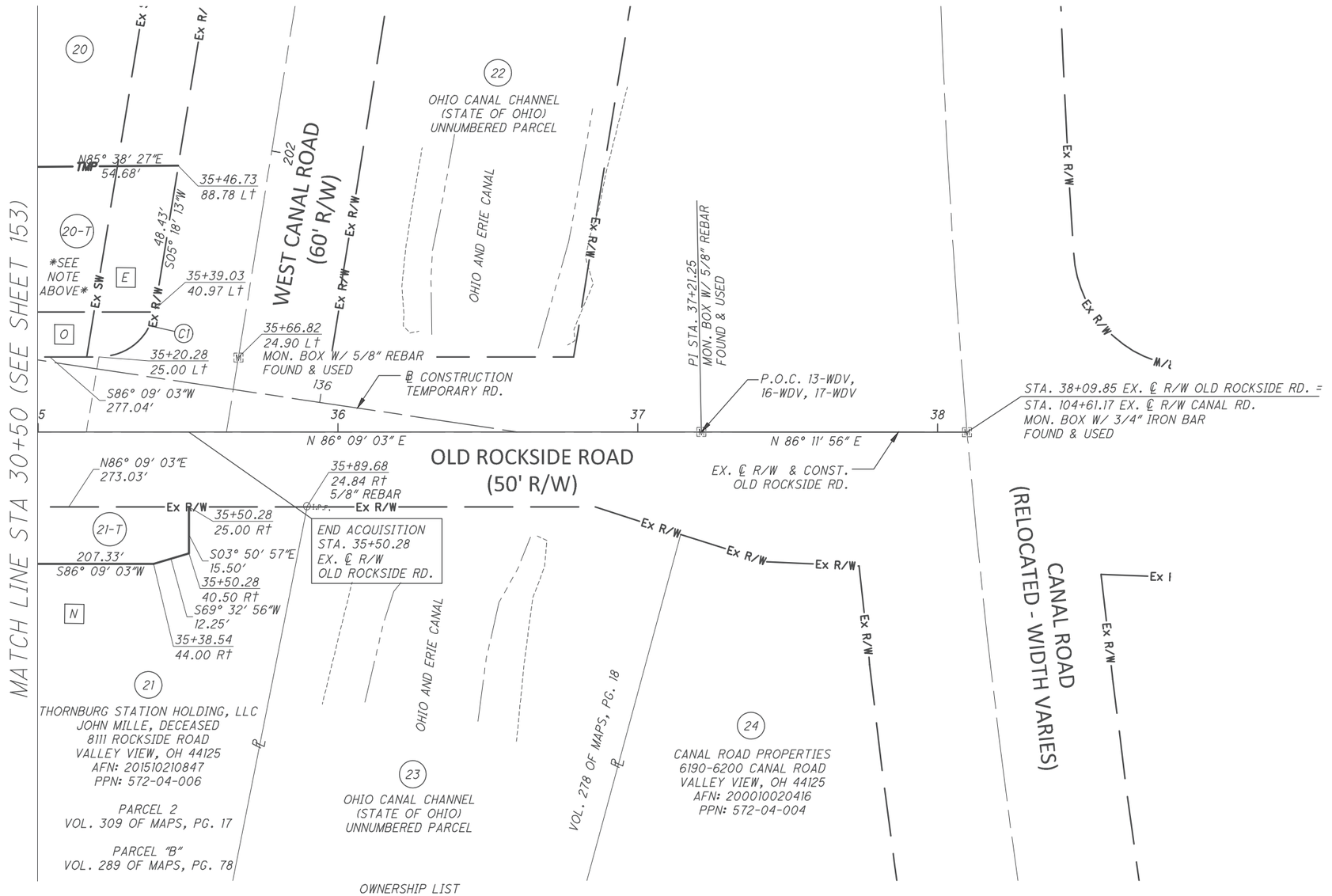

THORNBURG STATION HOLDING, LLC
JOHN MILLE, DECEASED
8111 ROCKSIDE ROAD
VALLEY VIEW, OH 44125
AFN: 201510210847
PPN: 572-04-006

PARCEL 2
VOL. 309 OF MAPS, PG. 17

PARCEL "B"
VOL. 289 OF MAPS, PG. 78

OHIO CANAL CHANNEL
(STATE OF OHIO)
UNNUMBERED PARCEL

VOL. 278 OF MAPS, PG. 18

CANAL ROAD PROPERTIES
6190-6200 CANAL ROAD
VALLEY VIEW, OH 44125
AFN: 200010020416
PPN: 572-04-004

OWNERSHIP LIST

(20) FIP MASTER FUNDING I, LLC, A DELAWARE LIMITED LIABILITY COMPANY
JACOB MERKLE, DECEASED
6150 WEST CANAL ROAD
VALLEY VIEW, OH 44125
AFN: 202012090312
V. 237, PG. 568
PPN: 571-07-002

RIGHT OF WAY CURVE DATA

CURVE	CENTRAL ANGLE	RADIUS	CURVE LENGTH	CHORD LENGTH	CHORD BEARING
C1	80°50'50"	18.99'	26.80'	24.63'	S45°43'38"W

REV. BY	DATE	DESCRIPTION
MDJ	04/16/21	PARCEL 21-T UPDATE LABELS
MDJ	01/11/21	PARCEL 20-UPDATE OWNER, ADD EASEMENT, AND NEW LEASE AGREEMENT

DATE COMPLETED: 9/8/2020

HORIZONTAL SCALE IN FEET: 0, 10, 20, 40

PID NO. 91563

R/W DESIGNER SAF
R/W REVIEWER MDJ

RIGHT OF WAY BOUNDARY SHEET
STA. 30+50 TO END ACQUISITION
CUY - OLD ROCKSIDE ROAD

13 / 15

155 / 157

P:\PR57030\Cadd\Sheets\57030_RB003.dwg 19-Apr-21 10:21 AM

CUYAHOGA COUNTY
CITY OF INDEPENDENCE
ORIGINAL INDEPENDENCE TOWNSHIP
LOT 11, TRACT 3 EAST OF RIVER

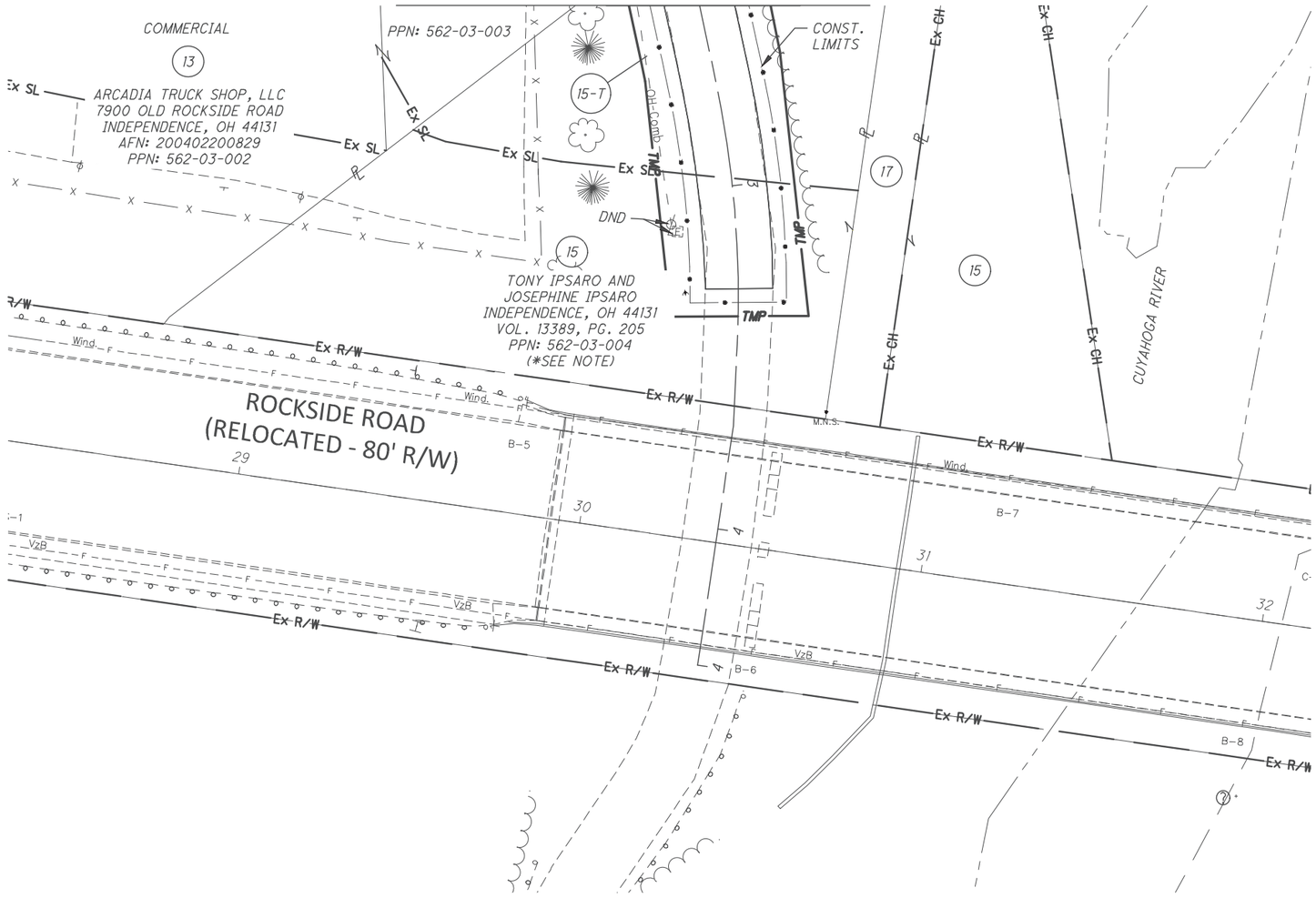

OWNERSHIP LIST

(17)

COUNTY OF CUYAHOGA
INPEPENDENCE, OH 44131
VOL. 10606, PG. 219
VOL. 10357, PG. 215
UNNUMBERED PARCEL

*NOTE: CUYAHOGA COUNTY AUDITOR'S LIST CURRENT OWNER FOR PPN 562-03-004 AS THE UNITED STATES OF AMERICA.

REV. BY	DATE	DESCRIPTION

DATE COMPLETED: 9/8/2020

HORIZONTAL SCALE IN FEET
0 10 20 40

PID NO. 91563

R/W DESIGNER SAF
R/W REVIEWER MDJ

RIGHT OF WAY TOPO SHEET
PARK DRIVE

CUY - OLD
ROCKSIDE ROAD

14 / 15

156
157

P:\PR57030\Cadd\Sheets\57030_RT004.dwg 19-Apr-21 10:22 AM

CUYAHOGA COUNTY
CITY OF INDEPENDENCE
ORIGINAL INDEPENDENCE TOWNSHIP
LOT 11, TRACT 3 EAST OF RIVER

EASEMENTS

[K] *SLOPE EASEMENT*
VOL. 10357, PG. 215 - PARCEL NO. A

[M] *PERPETUAL EASEMENT TO RELOCATE CUYAHOGA RIVER CHANNEL*
V. 10357, PG. 215 - PARCEL NO. C

MATCH LINE (SEE SHEET 151 & 153)

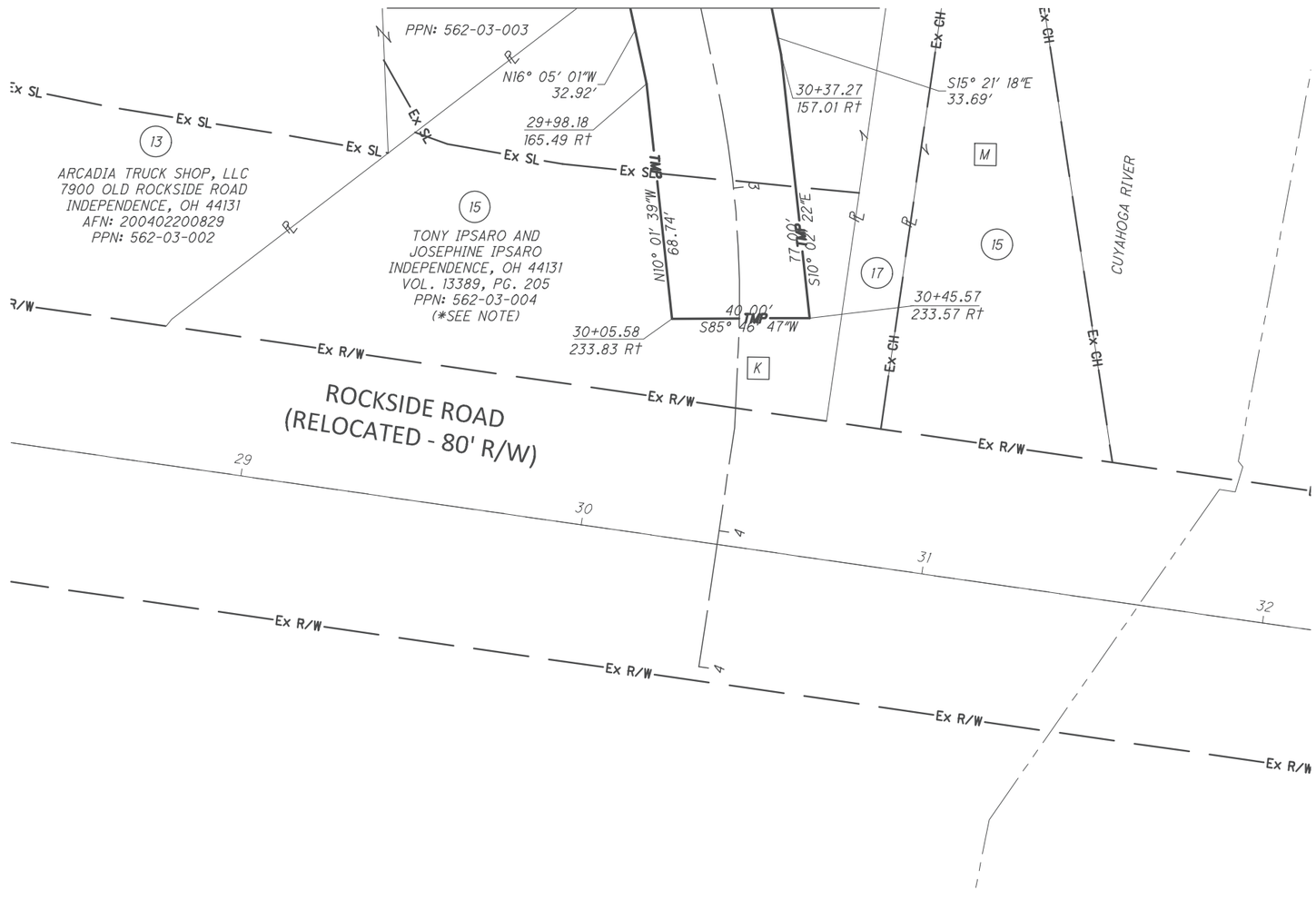

OWNERSHIP LIST

(17)

COUNTY OF CUYAHOGA
INPEPENDENCE, OH 44131
VOL. 10606, PG. 219
VOL. 10357, PG. 215
UNNUMBERED PARCEL
**NEWLY CREATED PARCEL NUMBER BY THE AUDITOR.*

**NOTE: CUYAHOGA COUNTY AUDITOR'S LIST CURRENT OWNER FOR PPN 562-03-004 AS THE UNITED STATES OF AMERICA.*

REV. BY	DATE	DESCRIPTION

DATE COMPLETED: 9/8/2020

HORIZONTAL SCALE IN FEET: 0, 10, 20, 40

PID NO. 91563

R/W DESIGNER SAF
R/W REVIEWER MDJ

RIGHT OF WAY BOUNDARY SHEET
PARK DRIVE

CUY - OLD ROCKSIDE ROAD

15 / 15

157 / 157

P:\PR57030\Cadd\Sheets\57030_RB004.dwg 19-Apr-21 10:23 AM

PROJECT DESCRIPTION

REPLACEMENT OF OLD ROCKSIDE ROAD BRIDGE (BRIDGE NO. 00.42) THAT SPANS THE CUYAHOGA RIVER. THE EXISTING TWO–SPAN PRESTRESSED CONCRETE BOX BEAM AND GIRDER BRIDGE IS TO BE REPLACED WITH A THREE–SPAN STEEL BEAM BRIDGE WITH SEMI–INTEGRAL STUB ABUTMENTS SUPPORTED ON CAST–IN–PLACE (CIP) PIPE PILES. THE EXISTING HAMMERHEAD PIER IN THE MIDDLE OF THE RIVER WILL BE REMOVED AND REPLACED WITH WALL TYPE PIERS SUPPORTED ON CIP PIPE PILES.

HISTORIC RECORDS

A SET OF FOURTEEN PLAN SHEETS TITLED "ROCKSIDE ROAD BRIDGE OVER CUYAHOGA RIVER, RECONSTRUCTION OF BRIDGE AND APPROACHES", DATED 2–19–60 WERE REVIEWED. SHEET NO. 3 OF THE PLAN SET WAS A SITE PLAN AND PROFILE, WHICH INCLUDED ONE BORING LOG, DESIGNATED C–20. THE PLAN INDICATES THAT THE BORING WAS PERFORMED APPROXIMATELY IN THE MIDDLE OF THE CUYAHOGA RIVER, ABOUT 60 FEET SOUTH OF THE BRIDGE. THE BORING LOG INDICATES THAT THE BORING EXTENDED TO AN ELEVATION OF ABOUT 520 FEET. THE SUBSOIL CONSISTED OF FIRM TO VERY STIFF, SILTY CLAYS, MEDIUM DENSE SILTS, AND FIRM TO VERY STIFF CLAYEY SILTS. THE SUBSURFACE CONDITIONS IN THIS HISTORIC BORING APPEAR TO BE CONSISTENT WITH THE FINDINGS OF THE CURRENT TEST BORINGS.

GEOLOGY

THE SITE IS LOCATED OVER A DEEP BURIED VALLEY THAT WAS CUT INTO THE ROCK PRIOR TO, AND BETWEEN PERIODS OF, PLEISTOCENE GLACIATION. THE TOP OF ROCK IS LOCATED APPROXIMATELY 150 FEET BELOW THE EXISTING GRADES AT AN ELEVATION OF ABOUT 450 FEET. THE SOILS WITHIN THE BURIED VALLEY CONSIST PRIMARILY OF LACUSTRINE SEDIMENTS OF SILT AND CLAY.

RECONNAISSANCE

TERRACON PERSONNEL VISITED THE SITE SEVERAL TIMES PRIOR TO AND DURING THE TEST BORING OPERATIONS. WE OBSERVED THAT THE SLOPE PROTECTION WAS ERODED FROM THE ABUTMENT FACE ON THE EAST BANK OF THE RIVER. THE WESTERN BANK WAS COVERED WITH CONCRETE RUBBLE. NO OBVIOUS SIGNS OF SCOUR AT THE BRIDGE LOCATION WAS OBSERVED.

SUBSURFACE EXPLORATION

THREE STRUCTURE TEST BORINGS AND TWO ROADWAY TEST BORINGS WERE PERFORMED. STRUCTURE BORINGS B–002–0–19, B–003–0–19 AND B–004–0–19 WERE LOCATED IN PROXIMITY TO THE EXISTING BRIDGE ABUTMENTS AND WERE ADVANCED TO DEPTHS RANGING BETWEEN ABOUT 110 AND 120 FEET BELOW THE EXISTING GROUND SURFACE ELEVATION. THE ROADWAY BORINGS, B–001–0–19 AND B–005–0–19, WERE LOCATED IN OLD ROCKSIDE ROAD, WEST AND EAST OF THE BRIDGE AND WERE TERMINATED AT A DEPTH OF 8 FEET BELOW THE EXISTING GRADE.

ALL TEST BORINGS EXCEPT B–003 WERE PERFORMED WITH A MOBILE B–57 TRUCK RIG (AVERAGE DRILL ROD ENERGY RATIO (ER) OF 93.8%, CALIBRATED NOVEMBER 2019). TEST BORING B–003 WAS PERFORMED WITH A MOBILE B–57 TRACK RIG (AVERAGE DRILL ROD ENERGY RATIO (ER) OF 93.0%, CALIBRATED NOVEMBER 2019). B–001 AND B–005 WERE ADVANCED USING 3 1/4–INCH HOLLOW STEM AUGERS. B–003 THROUGH B–004 WERE ADVANCED USING 3 1/4–INCH HOLLOW STEM AUGERS UP TO A DEPTH OF ABOUT 35 TO 36 FEET BELOW GROUND SURFACE. FROM THERE, THE BORINGS WERE ADVANCED USING ROTARY WASH METHODS. SAMPLES WERE OBTAINED AT PRESCRIBED INTERVALS USING STANDARD PENETRATION TEST (SPT). IN ADDITION, THIN–WALLED SAMPLES (SHELBY TUBES) WERE OBTAINED AT SELECTED DEPTHS.

GROUNDWATER LEVELS WERE OBSERVED DURING DRILLING AND AT COMPLETION OF DRILLING ACTIVITIES AT EACH TEST BORING. NO LONG–TERM (24 HOUR) WATER LEVEL READINGS WERE OBTAINED. GROUNDWATER WAS NOT ENCOUNTERED DURING OR AFTER DRILLING IN B–001 AND B–005. GROUNDWATER WAS ENCOUNTERED AT DEPTHS RANGING FROM ABOUT 8 TO 19.5 FEET BELOW GROUND SURFACE DURING DRILLING IN B–002 THROUGH B–004. GROUNDWATER LEVELS MEASURED AFTER DRILLING ARE NOT CONSIDERED AN ACCURATE MEASURE OF GROUNDWATER CONDITIONS DUE TO ROTORY WASH DRILLING PROCEDURES USED.

EXPLORATION FINDINGS

STRUCTURE BORINGS B–002 AND B–004 WERE LOCATED ADJACENT TO THE EXISTING BRIDGE ABUTMENTS AND WERE PERFORMED AT THE EXISTING ROADWAY LEVEL. AT THESE LOCATIONS, THE ROADWAY PAVEMENT WAS FOUND TO CONSIST OF 8 TO 12 INCHES OF ASPHALT OVER 8 TO 12 INCHES OF GRANULAR BASE. BENEATH THE PAVEMENT, SANDY SILTS AND SILT AND CLAYS WERE PRIMARILY ENCOUNTERED TO A DEPTH OF ABOUT 15.5 FEET (ELEVATION 591.5 FEET) AT B–002 AND ABOUT 20.5 FEET (ELEVATION 587.2 FEET) AT B–004. FOR THE MOST PART, THE COHESIVE SOILS WITHIN THIS ZONE WERE MEDIUM STIFF TO STIFF AND THE NON–COHESIVE SOILS WERE VERY LOOSE TO LOOSE. STRUCTURE BORING B–003 WAS PERFORMED ON THE SOUTH SIDE OF THE EXISTING BRIDGE, NEAR ITS WEST ABUTMENT. AT THIS LOCATION, APPROXIMATELY 12 INCHES OF TOPSOIL WAS ENCOUNTERED. THE TOPSOIL WAS UNDERLAIN BY MEDIUM STIFF TO STIFF, SANDY SILT TO A DEPTH OF ABOUT 8 FEET (ELEVATION 591.6 FEET).

AT ALL THREE TEST LOCATIONS, A LAYER OF SAND AND GRAVEL WAS ENCOUNTERED BENEATH THE SOILS DESCRIBED ABOVE. THE SAND AND GRAVEL WAS VERY LOOSE TO MEDIUM DENSE AND WAS 3.5 TO 7.5 FEET THICK (EXTENDING TO AN ELEVATION OF ABOUT 584 FEET AT B–002 AND B–004, AND 587 FEET AT B–003).

LEGEND

DESCRIPTION	ODOT CLASS	CLASSIFIED MECH.	CLASSIFIED VISUAL
GRAVEL AND/OR STONE FRAGMENTS	A–1–a	1	0
GRAVEL AND/OR STONE FRAGMENTS WITH SAND	A–1–b	2	2
GRAVEL AND/OR STONE FRAGMENTS WITH SAND & SILT	A–2–4	1	1
FINE SAND	A–3	2	1
COARSE AND FINE SAND	A–3a	2	1
SANDY SILT	A–4a	17	10
SILT	A–4b	7	9
SILT AND CLAY	A–6a	18	12
SILTY CLAY	A–6b	10	4
CLAY	A–7–6	3	1
	TOTAL	63	41

PAVEMENT OR BASE = X = APPROXIMATE THICKNESS

SOD AND TOPSOIL = X = APPROXIMATE THICKNESS VISUAL

BORING LOCATION – PLAN VIEW.

HISTORIC BORING LOCATION – PLAN VIEW – REPORT NO. 6814, 1960

DRIVE SAMPLE AND/OR ROCK CORE BORING PLOTTED TO VERTICAL SCALE ONLY. HORIZONTAL BAR INDICATES A CHANGE IN STRATIGRAPHY.

WC INDICATES WATER CONTENT IN PERCENT.

N_{60} INDICATES STANDARD PENETRATION RESISTANCE NORMALIZED TO 60% DRILL ROD ENERGY RATIO.

W— INDICATES GROUND WATER ENCOUNTER ELEVATION.

▼— INDICATES WATER LEVEL ELEVATION AT COMPLETION.

● INDICATES A PLASTIC MATERIAL WITH A MOISTURE CONTENT EQUAL TO OR GREATER THAN THE LIQUID LIMIT MINUS 3.

⊖ INDICATES A NON–PLASTIC MATERIAL WITH A MOISTURE CONTENT GREATER THAN 25 % OR GREATER THAN 19 % WITH A WET APPEARANCE.

* INDICATES A SAMPLE TAKEN WITHIN 3 FT OF PROPOSED GRADE.

SS INDICATES A SPLIT SPOON SAMPLE.

NP INDICATES A NON–PLASTIC SAMPLE.

ST INDICATES SHELBY TUBE SAMPLE.

FINE, LACUSTRINE DEPOSITS WERE ENCOUNTERED BENEATH THE GRANULAR LAYER AND EXTENDED TO THE TERMINAL DEPTHS OF THESE STRUCTURE BORINGS. THE LACUSTRINE SOILS INCLUDED SANDY SILTS, SILTS, SILTY CLAYS AND SILT AND CLAYS. THESE SOILS WERE MEDIUM STIFF TO VERY STIFF TO DEPTHS OF ABOUT 66, 56.5, AND 71 FEET AT BORING LOCATIONS B–002, B–003, AND B–004, RESPECTIVELY. THESE DEPTHS CORRESPOND TO AN ELEVATION OF ABOUT 541 FEET AT B–002, 543 FEET AT B–003, AND 537 FEET AT B–004. AT GREATER DEPTHS THE SOILS WERE STIFF TO HARD. BEDROCK WAS NOT ENCOUNTERED IN THE TEST BORINGS

SPECIFICATIONS

THIS GEOTECHNICAL EXPLORATION WAS PERFORMED IN GENERAL ACCORDANCE WITH THE STATE OF OHIO, DEPARTMENT OF TRANSPORTATION, OFFICE OF GEOTECHNICAL ENGINEERING, SPECIFICATIONS FOR GEOTECHNICAL EXPLORATIONS, DATED JANUARY 15, 2021.

AVAILABLE INFORMATION

ALL AVAILABLE SOIL AND BEDROCK INFORMATION THAT CAN BE CONVENIENTLY SHOWN ON THE GEOTECHNICAL EXPLORATION SHEETS HAS BEEN SO REPORTED. ADDITIONAL EXPLORATIONS MAY HAVE BEEN MADE TO STUDY SOME SPECIAL ASPECT OF THE PROJECT. COPIES OF THIS DATA, IF ANY, MAY BE INSPECTED IN THE DISTRICT DEPUTY DIRECTOR'S OFFICE, THE OFFICE OF GEOTECHNICAL ENGINEERING AT 1600 WEST BROAD STREET OR THE OFFICE OF STRUCTURAL ENGINEERING AT 1980 WEST BROAD STREET.

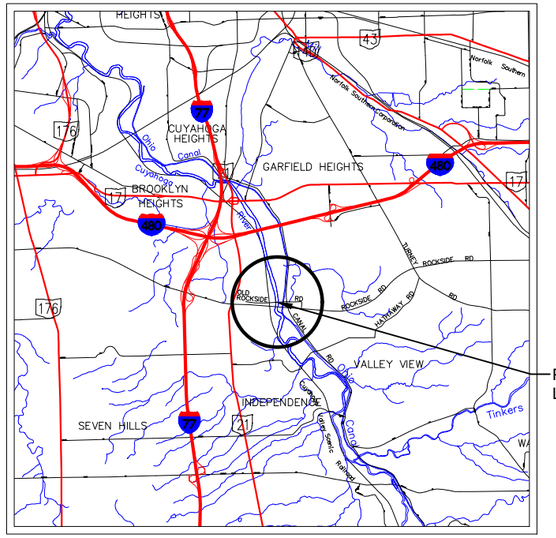

LOCATION MAP

SCALE IN MILES

0 1 2 3 4

N

PARTICLE SIZE DEFINITIONS

12"	3"	2.0 mm	0.42 mm	0.074 mm	0.005 mm
BOULDERS	COBBLES	GRAVEL	COARSE SAND	FINE SAND	SILT / CLAY
		No. 10 SIEVE	No. 40 SIEVE	No. 200 SIEVE	

HISTORIC BORING VISUAL DESCRIPTIONS

LOOSE, BROWN, F–C GRAVEL, SOME F–C SAND

FIRM TO STIFF, VERY STIFF WITH DEPTH, GRAY SILTY CLAY

MEDIUM DENSE, GRAY SILT, TRACE TO LITTLE FINE SAND WITH THIN LAYERS OF CLAYEY SILT AND SILTY CLAY

VERY STIFF, GRAY CLAYEY SILT, TRACE TO LITTLE F–C SAND, LITTLE F GRAVEL

D_{50} Values

Boring No.	Sample No.	Elevation	D_{50} Value
B–002–0–19	SS–12	582.5' – 581.0'	0.013 mm
B–003–0–19	SS–7	585.6' – 584.1'	0.004 mm
	SS–9	582.6' – 581.1'	0.004 mm
B–004–0–19	SS–11	583.2' – 581.7'	0.004 mm
	ST–15	576.7' – 574.7'	0.004 mm

RECON. – LLP 4/15/2019

DRILLING – JH 5/14/2019 – 5/21/2019

DRAWN – KJM 4/16/2020

REVIEWED – LLP/TFM 4/23/2020

DESIGN AGENCY
Terracon
Consulting Engineers and Scientists

PID NO. 91563

STRUCTURE FOUNDATION EXPLORATION

CUY - OLD ROCKSIDE ROAD

SUMMARY OF SOIL TEST DATA
OLD ROCKSIDE ROAD

EXPLORATION ID., STATION & OFFSET	FROM – TO	SAMPLE ID	N60	% REC	tsf HP	% GR	% CS	% FS	% SILT	% CLAY	LL	PL	PI	% WC	ODOT CLASS (GI)	ppm SO_4
B–001–0–19	02.00 – 03.50	SS–1	6	78	1.75	0	2	23	48	27	28	17	11	21	A–6A (8)	
STA. 29+64, 10' RT.	03.50 – 05.00	SS–2	5	67	0.75				SAME AS SS–3					28	A–4a (VISUAL)	
LATITUDE = 41.394500	05.00 – 06.50	SS–3	3	100	1.00	0	0	39	43	18	24	18	6	26	A–4a (5)	
LONGITUDE = –81.630060	06.50 – 08.00	SS–4	3	100	0.75				SAME AS SS–3					33	A–4a (VISUAL)	
B–005–0–19	02.00 – 03.50	SS–1	62	100	–	21	15	33	21	10	NP	NP	NP	11	A–2–4 (0)	
STA. 34+12, 8' LT.	03.50 – 05.00	SS–2	9	89	2.50	0	0	28	51	21	27	19	8	16	A–4b (7)	
LATITUDE = 41.394670	05.00 – 06.50	SS–3	6	83	1.00	0	0	30	52	18	25	18	7	24	A–4b (7)	
LONGITUDE = –81.628430	06.50 – 08.00	SS–4	5	100	1.00				SAME AS SS–3					32	A–4b (VISUAL)	

brick building

Franck & Fric Inc.
AFN: 201003290419
PPN: 561-16-002

conc. pad

United States of America
No Permanent Parcel Number Assigned

edge of water

UPPER PIER CAP
(BOTTOM OF DECK)
ELEV = 607.04'

edge of pavement

2 story brick building

Envirotest Systems Corp
AFN: 200712110683
PPN: 571-07-002
through
PPN: 571-07-004

asph. lot

R/W

Ex R/W

B-001-0-19

B-002-0-19

B-003-0-19

B-004-0-19

B-005-0-19

CENTER PIER

LOWER PIER CAP
TOP = 592.26'
BOTTOM = 589.26'

OLD ROCKSIDE ROAD
(50' PUBLIC R/W)

conc. curb

Approximate 15' waterline easement
per Cleveland Water plans

Ex U

PPN: 562-03-999
Newly created parcel number
by the Auditor.

Arcadia Truck Shop, LLC
AFN: 200402200829
PPN: 562-03-003

United States of America
PPN: 562-03-1998

C-020-0-60

asph. lot

Thornburg Station Condominium
AFN: 20151021084;
PPN: 572-04-006

conc. curb

30 31 32 33 34

599 600 601 602 603 604 605 606 607

STRUCTURE FOUNDATION EXPLORATION
BRIDGE OVER OLD ROCKSIDE ROAD

DRAWN KJM
CHECKED LLP

HORIZONTAL SCALE IN FEET
0 10 20 40

CUY - OLD
ROCKSIDE ROAD

3 / 15

0
0

B-002-0-19
STA. 30+88
9' LT.
ASPHALT=1.0'
LIMESTONE BASE=1.0'

B-003-0-19
34' RT.
TOPSOIL=1.0'

C-020-0-60
75' RT.

B-004-0-19
10' LT.
ASPHALT=0.7'
LIMESTONE BASE=0.6'

N_{60} WC

30+00 31+00 32+00 33+00 34+00

STRUCTURE FOUNDATION EXPLORATION
BRIDGE OVER OLD ROCKSIDE ROAD

HORIZONTAL SCALE IN FEET
0 10 20 40

DRAWN KJM
CHECKED LLP

CUY - OLD ROCKSIDE ROAD

PROJECT: OLD ROCKSIDE ROAD	DRILLING FIRM / OPERATOR: OTB / FAY	DRILL RIG: B-57 TRUCK	STATION / OFFSET: 30+88, 9' LT.	EXPLORATION ID B-002-0-19
TYPE: BRIDGE	SAMPLING FIRM / LOGGER: OTB / FAY	HAMMER: CME AUTOMATIC	ALIGNMENT: PROJECT'S BASELINE	
PID: 91563 SFN:	DRILLING METHOD: 3.25" HSA	CALIBRATION DATE: 11/1/18	ELEVATION: 607.0 (MSL) EOB: 120.0 ft.	PAGE 1 OF 2
START: 5/14/19 END: 5/17/19	SAMPLING METHOD: SPT / ST	ENERGY RATIO (%): 90*	LAT / LONG: 41.394620, -81.629100	

MATERIAL DESCRIPTION AND NOTES	ELEV. 607.0	DEPTHS	SPT/ RQD	N_{60}	REC (%)	SAMPLE ID	HP (tsf)	GRADATION (%) GR	CS	FS	SI	CL	ATTERBERG LL	PL	PI	WC	ODOT CLASS (GI)	HOLE SEALED
ASPHALT (12")	606.0																	
LIMESTONE BASE (12")	605.0																	
HARD, GREENISH BROWN TO BROWN, **SILT AND CLAY**, LITTLE SAND, TRACE GRAVEL, CONTAINS BRICK, ASPHALT, (FILL), DAMP	603.7		9 5 6	17	78	SS-1	4.50	-	-	-	-	-	-	-	-	13	A-6a (V)	
STIFF TO VERY STIFF, DARK BROWN, **SANDY SILT**, SOME CLAY, TRACE GRAVEL, (FILL), MOIST			5 7 5	18	100	SS-2	3.75	9	2	29	40	20	27	19	8	19	A-4a (5)	
			2 1 1	3	44	SS-3	1.00	-	-	-	-	-	-	-	-	16	A-4a (V)	
@8.0'; BROWN, SOME CLAY, DAMP			2 5 3	12	100	SS-4	-	-	-	-	-	-	-	-	-	16	A-4a (V)	
	596.5																	
VERY LOOSE TO LOOSE, BROWN, **SANDY SILT**, LITTLE CLAY, MOIST TO WET			1 2 2	6	89	SS-5	-	0	0	41	43	16	NP	NP	NP	20	A-4a (5)	
		W 593.0	2 1 1	3	100	SS-6	-	-	-	-	-	-	-	-	-	25	A-4a (V)	
	591.5																	
VERY LOOSE TO LOOSE, BROWN, **FINE SAND**, SOME COARSE SAND, TRACE GRAVEL, TRACE SILT, WET			1 1 1	3	100	SS-7	-	-	-	-	-	-	-	-	-	27	A-3 (V)	
			1 1 3	6	56	SS-8	-	-	-	-	-	-	-	-	-	22	A-3 (V)	
			2 2 2	6	67	SS-9	-	5	25	61	6	3	NP	NP	NP	26	A-3 (0)	
MEDIUM DENSE, OLIVE-GRAY, **GRAVEL AND/OR STONE FRAGMENTS**, SOME SAND, TRACE SILT, WET	585.5		3 4 8	18	72	SS-10	-	67	12	11	8	2	NP	NP	NP	13	A-1-a (0)	
	584.0																	
STIFF, GRAY, **SILTY CLAY**, MOIST			4 2 2	6	33	SS-11	1.50	-	-	-	-	-	-	-	-	36	A-6b (V)	
			2 3 4	11	83	SS-12	1.75	0	1	1	30	68	36	20	16	26	A-6b (10)	
			3 3 5	12	100	SS-13	1.25	-	-	-	-	-	-	-	-	25	A-6b (V)	
	579.0																	
STIFF TO VERY STIFF, GRAY, **SANDY SILT**, MOIST			2 3 4	11	100	SS-14	2.00	-	-	-	-	-	-	-	-	25	A-4a (V)	
@31.0'; UU TEST RESULTS - SAMPLE DEPTH 31.0-33.0 FEET QU = 1.45 TSF, DRY DENSITY = 104.4 PCF, CELL PRESSURE = 0.87 TSF					100	ST-15	-	1	0	1	39	59	27	21	6	26	A-4a (8)	
			3 3 4	11	100	SS-16	2.50	-	-	-	-	-	-	-	-	29	A-4a (V)	
	570.0																	
STIFF TO VERY STIFF, GRAY, **SILT**, SOME CLAY, MOIST			2 2 4	9	83	SS-17	2.25	1	0	0	72	27	26	22	4	26	A-4b (8)	
			2 3 3	9	100	SS-18	0.50	-	-	-	-	-	-	-	-	28	A-4b (V)	
			2 3 3	9	100	SS-19	1.25	1	1	3	-	95 -	23	21	2	28	A-4 (8)	
	555.0																	
MEDIUM STIFF TO STIFF, GRAY, **SANDY SILT**, MOIST			2 3 3	9	100	SS-20	1.00	-	-	-	-	-	-	-	-	22	A-4a (V)	
			2 3 3	9	100	SS-21	1.25	-	-	-	-	-	-	-	-	23	A-4a (V)	

STANDARD ODOT SOIL BORING LOG (11 X 17) - OH DOT.GDT - 8/21/20 12:23 - C:\USERS\RMGATERMANN\ONEDRIVE - TERRACON CONSULTANTS INC\DESKTOP\N8175063 REPLACEMENT (ODOT FORMAT)_REVISION.GPJ

PID: 91563	SFN:	PROJECT: OLD ROCKSIDE ROAD	STATION / OFFSET: 30+88, 9' LT.	START: 5/14/19	END: 5/17/19	PG 2 OF 2	B-002-0-19

MATERIAL DESCRIPTION AND NOTES	ELEV.	DEPTHS	SPT/ RQD	N_{60}	REC (%)	SAMPLE ID	HP (tsf)	GRADATION (%) GR	CS	FS	SI	CL	ATTERBERG LL	PL	PI	WC	ODOT CLASS (GI)	HOLE SEALED
MEDIUM STIFF TO STIFF, GRAY, **SANDY SILT**, MOIST *(continued)*	547.0	61–65	2 3 4	11	100	SS-22	0.50	0	0	0	40	60	33	23	10	30	A-4a (8)	
	541.0	66–70	3 5 7	18	100	SS-23	2.00	-	-	-	-	-	-	-	-	19	A-6a (V)	
@71.0'; NO SAMPLE RECOVERY IN THE SHELBY TUBE PUSHED FROM A DEPTH OF 71 TO 73 FEET		71–73			0	ST-24	-	-	-	-	-	-	-	-	-	-		
		74–80	4 4 9	20	100	SS-25	2.00	7	3	5	44	41	28	17	11	19	A-6a (8)	
		79–80	4 6 10	24	100	SS-26	2.75	-	-	-	-	-	-	-	-	18	A-6a (V)	
	525.0	81–83																
STIFF TO HARD, GRAY, **SANDY SILT**, MOIST		84–88			100	SS-27	4.00	-	-	-	-	-	-	-	-	17	A-4a (V)	
		89–90	7 11 12	35	100	SS-28	3.75	3	2	5	47	43	28	18	10	16	A-4a (8)	
		94–95	7 11 16	41	100	SS-29	4.50	-	-	-	-	-	-	-	-	16	A-4a (V)	
@98.5'; NO SAMPLE RECOVERY IN THE SPLIT-BARREL FROM A DEPTH OF 98.5 TO 100 FEET		99–100	6 8 10	27	0	SS-30	-	-	-	-	-	-	-	-	-	-		
		104–105	8 10 11	32	33	SS-31	1.50	0	1	1	48	50	29	19	10	30	A-4a (8)	
	499.0	108																
STIFF, GRAY, **SILTY CLAY**, MOIST		109–110	4 5 6	17	39	SS-32	1.25	-	-	-	-	-	-	-	-	28	A-6b (V)	
		114–115	4 5 6	17	100	SS-33	1.25	-	-	-	-	-	-	-	-	27	A-6b (V)	
	487.0	EOB 119–120	3 5 5	15	100	SS-34	1.00	0	0	0	34	66	39	20	19	30	A-6b (12)	

NOTES: NONE

ABANDONMENT METHODS, MATERIALS, QUANTITIES: PUMPED 2 BAG SEALED WITH PORTLAND CEMENT AND BENTONITE GROUT

STANDARD ODOT SOIL BORING LOG (11 X 17) - OH DOT.GDT - 8/21/20 12:23 - C:\USERS\RMGATERMAN\ONEDRIVE - TERRACON CONSULTANTS INC\DESKTOP\N6175053 REPLACEMENT (ODOT FORMAT)_REVISION.GPJ

PROJECT: OLD ROCKSIDE ROAD	DRILLING FIRM / OPERATOR: OTB / HEPNER	DRILL RIG: B-57 TRACK	STATION / OFFSET: 31+09, 34' RT.
TYPE: BRIDGE	SAMPLING FIRM / LOGGER: OTB / HEPNER	HAMMER: CME AUTOMATIC	ALIGNMENT: PROJECT'S BASELINE
PID: 91563 SFN:	DRILLING METHOD: 3.25" HSA	CALIBRATION DATE: 11/1/18	ELEVATION: 599.6 (MSL) EOB: 120.0 ft.
START: 5/20/19 END: 5/20/19	SAMPLING METHOD: SPT / ST	ENERGY RATIO (%): 90"	LAT / LONG: 41.394500, -81.629530

EXPLORATION ID B-003-0-19

PAGE 1 OF 2

MATERIAL DESCRIPTION AND NOTES	ELEV. 599.6	DEPTHS	SPT/ RQD	N_{60}	REC (%)	SAMPLE ID	HP (tsf)	GRADATION (%) GR	CS	FS	SI	CL	ATTERBERG LL	PL	PI	WC	ODOT CLASS (GI)	HOLE SEALED
TOPSOIL (12")	598.6																	
MEDIUM STIFF TO STIFF, BROWN, **SANDY SILT**, CONTAINS ROOTLETS, MOIST			1 2 2	6	72	SS-1	2.75	-	-	-	-	-	-	-	-	24	A-4a (V)	
			1 1 1	3	94	SS-2	1.75	2	2	36	43	17	25	20	5	20	A-4a (5)	
			1 1 1	3	94	SS-3A	0.75	-	-	-	-	-	-	-	-	27	A-4a (V)	
						SS-3B	2.00	-	-	-	-	-	-	-	-	38	A-4a (V)	
	591.6	W 591.6																
VERY LOOSE, DARK GRAY, **COARSE AND FINE SAND**, SOME GRAVEL, LITTLE SILT, WET	589.1		1 for 12" 1	2	72	SS-4	-	22	21	38	14	5	NP	NP	NP	39	A-3a (0)	
MEDIUM DENSE, GRAY, **GRAVEL WITH SAND**, TRACE SILT, WET	587.1		4 6 2	12	17	SS-5	-	-	-	-	-	-	-	-	-	15	A-1-b (V)	
STIFF, GRAY, **SILTY CLAY**, MOIST			1 2 4	9	83	SS-6	1.25	-	-	-	-	-	-	-	-	26	A-6b (V)	
			3 4 5	14	94	SS-7	2.00	0	1	1	31	67	39	21	18	25	A-6b (11)	
	582.6		3 4 6	15	94		-	-	-	-	-	-	-	-	-	-		
STIFF, GRAY, **SILT AND CLAY**, MOIST			2 4 4	12	100	SS-9	2.00	0	0	0	37	63	35	21	14	24	A-6a (10)	
			2 4 5	14	94	SS-10	1.75	-	-	-	-	-	-	-	-	28	A-6a (V)	
			2 3 4	11	94	SS-11	1.25	-	-	-	-	-	-	-	-	29	A-6a (V)	
			2 3 5	12	100	SS-12	1.25	-	-	-	-	-	-	-	-	24	A-6a (V)	
			4 6 6	18	83	SS-13	1.25	-	-	-	-	-	-	-	-	24	A-6a (V)	
	569.1		3 4 5	14	89	SS-14	1.00	0	0	0	50	50	31	20	11	26	A-6a (8)	
MEDIUM STIFF TO VERY STIFF, GRAY, **SILT**, LITTLE TO SOME SILT, MOIST @31.0'; UU TEST RESULTS - SAMPLE DEPTH 31.0 TO 33.5 FEET, QU = 3.61 TSF, DRY DENSITY = 112.8 PCF, CELL PRESSURE = 1.3 TSF					100	ST-15	-	0	0	1	81	18	24	20	4	22	A-4b (8)	
			3 4 6	15	94	SS-16	1.00	-	-	-	-	-	-	-	-	24	A-4b (V)	
			3 4 4	12	94	SS-17	-	0	0	1	75	24	24	20	4	27	A-4b (8)	
			2 2 2	6	100	SS-18	-	-	-	-	-	-	-	-	-	22	A-4b (V)	
	548.6		2 3 3	9	94	SS-19	0.50	0	0	0	63	37	26	19	7	22	A-4b (8)	
MEDIUM STIFF, GRAY, **SILT AND CLAY**, TRACE SAND, TRACE GRAVEL, MOIST			4 5 5	15	100	SS-20	0.50	-	-	-	-	-	-	-	-	28	A-6a (V)	
	542.9																	
STIFF, GRAY, **SILT AND CLAY**, MOIST @58.5'; UU TEST RESULTS - SAMPLE DEPTH 58.5 TO 60.5 FEET, QU = 1.81 TSF, DRY DENSITY = 106.3 PCF, CELL PRESSURE = 2.25 TSF					100	ST-21	-	-	-	-	-	-	-	-	-	-	A-6a (V)	

STANDARD ODOT SOIL BORING LOG (11 X 17) - OH DOT.GDT - 8/21/20 12:23 - C:\USERS\RMGATERMANN\ONEDRIVE - TERRACON CONSULTANTS INC\DESKTOP\N6175053 REPLACEMENT (ODOT FORMAT)_REVISION.GPJ

PID: 91563	SFN:	PROJECT: OLD ROCKSIDE ROAD	STATION / OFFSET: 31+09, 34' RT.	START: 5/20/19	END: 5/20/19	PG 2 OF 2	B-003-0-19

MATERIAL DESCRIPTION AND NOTES	ELEV.	DEPTHS	SPT/ RQD	N_{60}	REC (%)	SAMPLE ID	HP (tsf)	GRADATION (%) GR	CS	FS	SI	CL	ATTERBERG LL	PL	PI	WC	ODOT CLASS (GI)	HOLE SEALED
STIFF, GRAY, **SILT AND CLAY**, MOIST *(continued)*	539.6	61–64	3 4 4	12	100	SS-22	1.25	5	1	3	35	56	34	19	15	27	A-6a (10)	
VERY STIFF, GRAY, **SILT AND CLAY**, TRACE SAND, MOIST	532.6	64–69	4 7 11	27	100	SS-23	2.75	-	-	-	-	-	-	-	-	17	A-6a (V)	
VERY STIFF TO HARD, GRAY, **SANDY SILT**, MOIST	524.6	69–74	5 9 13	33	94	SS-24	3.25	-	-	-	-	-	-	-	-	16	A-6a (V)	
@83.5'; UU TEST RESULTS - SAMPLE DEPTH 83.5 TO 85.5 FEET, QU = 5.3 TSF, DRY DENSITY = 119.2 PCF, CELL PRESSURE = 3.05 TSF	512.6	74–79	6 10 13	35	94	SS-25	4.00	2	4	5	47	42	27	18	9	16	A-4a (8)	
STIFF TO VERY STIFF, GRAY, **SILT**, MOIST	503.6	79–84			-	ST-26	-	-	-	-	-	-	-	-	-	-	A-4a (V)	
STIFF TO VERY STIFF, GRAY, **SILT AND CLAY**, MOIST	486.6	84–89	5 8 12	30	94	SS-27	1.50	-	-	-	-	-	-	-	-	24	A-4b (V)	
MEDIUM STIFF, GRAY, **SILT**, LITTLE CLAY, WET	479.6	89–94	5 7 10	26	100	SS-28	2.50	0	0	0	53	47	-	-	-	20	A-4b (V)	
		94–99	3 5 5	15	100	SS-29	1.25	-	-	-	-	-	28	19	9	26	A-6a (V)	
		99–104	2 4 6	15	100	SS-30	1.00	0	0	0	36	64	36	21	15	27	A-6a (10)	
		104–109	3 5 5	15	100	SS-31	1.00	-	-	-	-	-	-	-	-	26	A-6a (V)	
		109–114	3 6 6	18	100	SS-32	0.50	-	-	-	-	-	-	-	-	29	A-6a (V)	
		114–119	5 5 6	17	100	SS-33	-	0	0	1	82	17	22	20	2	27	A-4b (8)	
		EOB 120																

NOTES: NONE

ABANDONMENT METHODS, MATERIALS, QUANTITIES: PUMPED 2 BAG SEALED WITH PORTLAND CEMENT AND BENTONITE GROUT

STANDARD ODOT SOIL BORING LOG (11 X 17) - OH DOT.GDT - 8/21/20 12:23 - C:\USERS\RMGATERMANN\ONEDRIVE - TERRACON CONSULTANTS INC\DESKTOP\N6175053 REPLACEMENT (ODOT FORMAT)_REVISION.GPJ

PROJECT: OLD ROCKSIDE ROAD	DRILLING FIRM / OPERATOR: OTB / FAY	DRILL RIG: B-57 TRUCK	STATION / OFFSET: 32+12, 10' LT.	EXPLORATION ID B-004-0-19
TYPE: BRIDGE	SAMPLING FIRM / LOGGER: OTB / FAY	HAMMER: CME AUTOMATIC	ALIGNMENT: PROJECT'S BASELINE	
PID: 91563 SFN:	DRILLING METHOD: 3.25" HSA	CALIBRATION DATE: 11/1/18	ELEVATION: 607.7 (MSL) EOB: 110.0 ft.	PAGE 1 OF 2
START: 5/20/19 END: 5/21/19	SAMPLING METHOD: SPT / ST	ENERGY RATIO (%): 90*	LAT / LONG: 41.391650, -81.628950	

MATERIAL DESCRIPTION AND NOTES	ELEV.	DEPTHS	SPT/ RQD	N_{60}	REC (%)	SAMPLE ID	HP (tsf)	GRADATION (%) GR	CS	FS	SI	CL	ATTERBERG LL	PL	PI	WC	ODOT CLASS (GI)	HOLE SEALED
ASPHALT (8")	607.0																	
LIMESTONE BASE (8")	606.4																	
MEDIUM DENSE, BROWN, **COARSE AND FINE SAND**, SOME GRAVEL, LITTLE SILT, (PROBABLE FILL), DAMP	605.7		9 6 4	15	100	SS-1A	-	-	-	-	-	-	-	-	-	7	A-3a (V)	
						SS-1B	3.75	11	6	24	36	23	23	15	8	14	A-4a (5)	
VERY STIFF, BROWN, **SANDY SILT**, LITTLE GRAVEL, (PROBABLE FILL), DAMP @3.5'; STIFF, CONTAINS SAND SEAMS			3 2 2	6	56	SS-2	1.50	-	-	-	-	-	-	-	-	15	A-4a (V)	
	601.0		2 2 2	6	67	SS-3A	1.25	-	-	-	-	-	-	-	-	24	A-4a (V)	
						SS-3B	-	-	-	-	-	-	-	-	-	7	A-3a (V)	
LOOSE, LIGHT BROWN, **COARSE AND FINE SAND**, SOME STONE FRAGMENTS, TRACE SILT, (PROBABLE FILL), DAMP	599.7																	
STIFF, BROWN, **SILT AND CLAY**, TRACE COAL FRAGMENTS, TRACE TO LITTLE SAND, (PROBABLE FILL), DAMP			2 1 1	3	67	SS-4	1.25	-	-	-	-	-	-	-	-	22	A-6a (V)	
			2 3 3	9	78	SS-5	1.50	24	0	20	40	16	35	23	12	23	A-6a (5)	
			1 1 2	5	100	SS-6	1.00	0	0	6	- 94 -		38	23	15	31	A-6a (10)	
	591.0		1 2 2	6	100	SS-7A	1.50	-	-	-	-	-	-	-	-	32	A-6a (V)	
						SS-7B	-	-	-	-	-	-	-	-	-	-	A-4a (V)	
SOFT TO MEDIUM STIFF, DARK GRAY, **SANDY SILT**, MODERATELY ORGANIC, CONTAINS WOOD, (POSSIBLE FILL), WET		W 588.2	1 1 1	3	100	SS-8	0.50	-	-	-	-	-	-	-	-	29	A-4a (V)	
	587.2																	
LOOSE TO MEDIUM DENSE, BROWNISH GRAY, **GRAVEL WITH SAND**, LITTLE SILT, WET			2 3 4	11	89	SS-9	-	-	-	-	-	-	-	-	-	12	A-1-a (V)	
	583.7		5 2 3	8	39	SS-10	-	54	13	18	11	4	NP	NP	NP	9	A-1-b (0)	
MEDIUM STIFF TO STIFF, GRAY, **CLAY**, LITTLE SILT, WET			4 2 2	6	33	SS-11	0.50	-	-	-	-	-	-	-	-	32	A-7-6 (V)	
			2 3 3	9	100	SS-12	1.25	0	0	2	18	80	42	23	19	29	A-7-6 (12)	
			2 3 3	9	100	SS-13	1.25	-	-	-	-	-	-	-	-	31	A-7-6 (V)	
			2 3 4	11	100	SS-14	1.00	-	-	-	-	-	-	-	-	30	A-7-6 (V)	
	577.2																	
MEDIUM STIFF TO STIFF, GRAY, **SILT AND CLAY**, MOIST @31.0'; UU TEST RESULTS - SAMPLE DEPTH 31.0 TO 33.5 FEET, QU = 1.08 TSF, DRY DENSITY = 101.7 PCF, CELL PRESSURE = 1.5 TSF				63		ST-15	1.25	0	0	1	43	56	31	20	11	29	A-6a (8)	
			2 2 3	8	83	SS-16	0.50	-	-	-	-	-	-	-	-	29	A-6a (V)	
	570.7																	
MEDIUM STIFF TO STIFF, GRAY, **SILT**, AND CLAY, MOIST			1 2 3	8	100	SS-17	1.25	1	0	0	56	43	28	21	7	25	A-4b (8)	
@41.0'; UU TEST RESULTS - SAMPLE DEPTH 41.0 TO 43.0 FEET, QU = 1.13 TSF, DRY DENSITY = 106.7 PCF, CELL PRESSURE = 1.84 TSF					-	ST-18	-	0	1	1	61	37	23	20	3	26	A-4b (8)	
			2 3 5	12	100	SS-19	0.50	-	-	-	-	-	-	-	-	28	A-4b (V)	
	561.0																	
MEDIUM STIFF, GRAY, **SILT AND CLAY**, MOIST			2 2 2	6	100	SS-20	-	0	0	0	- 100 -		29	18	11	24	A-6a (8)	
			2 4 4	12	100	SS-21	-	-	-	-	-	-	-	-	-	20	A-6a (V)	
	551.0																	
MEDIUM STIFF, GRAY, **SILTY CLAY**, MOIST TO WET			5 5 6	17	83	SS-22	0.50	0	0	1	30	69	38	20	18	25	A-6b (11)	

STANDARD ODOT SOIL BORING LOG (11 X 17) - OH DOT.GDT - 8/25/20 15:28 - C:\USERS\RMGATERMANN\ONEDRIVE - TERRACON CONSULTANTS INC\DESKTOP\NB175053 REPLACEMENT (ODOT FORMAT)_REVISION.GPJ

9/15	CUY - OLD ROCKSIDE ROAD	STRUCTURE FOUNDATION EXPLORATION BORING LOG B-004-0-19 (1 OF 2)	DRAWN KJM CHECKED LLP

PID: 91563	SFN:	PROJECT: OLD ROCKSIDE ROAD	STATION / OFFSET: 32+12, 10' LT.	START: 5/20/19	END: 5/21/19	PG 2 OF 2	B-004-0-19

MATERIAL DESCRIPTION AND NOTES	ELEV.	DEPTHS	SPT/ RQD	N_{60}	REC (%)	SAMPLE ID	HP (tsf)	GRADATION (%) GR	CS	FS	SI	CL	ATTERBERG LL	PL	PI	WC	ODOT CLASS (GI)	HOLE SEALED
MEDIUM STIFF, GRAY, **SILTY CLAY**, MOIST TO WET *(continued)*	547.7	61																
		62																
		63																
		64	4 6 4	15	100	SS-23	0.50	-	-	-	-	-	-	-	-	27	A-6b (V)	
		65																
		66																
		67																
		68																
		69	4 5 5	15	100	SS-24	0.50	-	-	-	-	-	-	-	-	28	A-6b (V)	
	537.5	70																
VERY STIFF, GRAY, **SANDY SILT**, SOME CLAY, MOIST @71.0'; UU TEST RESULTS - SAMPLE DEPTH 71.0 TO 73.0 FEET, QU = 1.69 TSF, DRY DENSITY = 107.7 PCF, CELL PRESSURE = 2.7 TSF		71																
		72			96	ST-25	-	2	15	7	35	41	26	18	8	23	A-4a (8)	
		73																
	534.2	74																
STIFF, GRAY, **SANDY SILT**, MOIST		74	4 4 7	17	100	SS-26	0.75	1	0	0	46	53	-	-	-	31	A-4b (V)	
		75																
		76																
	530.7	77																
STIFF, GRAY, **SILTY CLAY**, MOIST		78																
		79	5 10 14	36	67	SS-27	2.00	-	-	-	-	-	32	23	9	20	A-6b (V)	
		80																
		81																
		82																
		83																
		84	5 10 13	35	100	SS-28	1.75	-	-	-	-	-	-	-	-	18	A-6b (V)	
	520.7	85																
VERY STIFF TO HARD, GRAY, **SILT AND CLAY**, TRACE SAND, MOIST		86																
		87																
		88																
		89	6 10 15	38	100	SS-29	2.00	2	3	5	45	45	29	17	12	18	A-6a (9)	
		90																
		91																
		92																
		93																
		94	5 11 17	42	100	SS-30	3.00	-	-	-	-	-	-	-	-	17	A-6b (V)	
		95																
		96																
		97																
		98																
		99	10 20 29	74	100	SS-31	4.25	4	4	5	46	41	28	17	11	15	A-6a (8)	
		100																
		101																
		102																
		103																
		104	9 17 22	59	100	SS-32	3.50	-	-	-	-	-	-	-	-	16	A-6b (V)	
		105																
		106																
		107																
		108																
	497.7	109	8 17 24	62	100	SS-33	2.25	5	3	5	44	43	28	17	11	19	A-6a (8)	
		EOB 110																

NOTES: NONE

ABANDONMENT METHODS, MATERIALS, QUANTITIES: PUMPED 2 BAGS SEALED WITH PORTLAND CEMENT AND BENTONITE GROUT

STANDARD ODOT SOIL BORING LOG (11 X 17) - OH DOT.GDT - 8/25/20 15:28 - C:\USERS\RMGATERMANN\ONEDRIVE - TERRACON CONSULTANTS INC\DESKTOP\N6175053 REPLACEMENT (ODOT FORMAT)_REVISION.GPJ

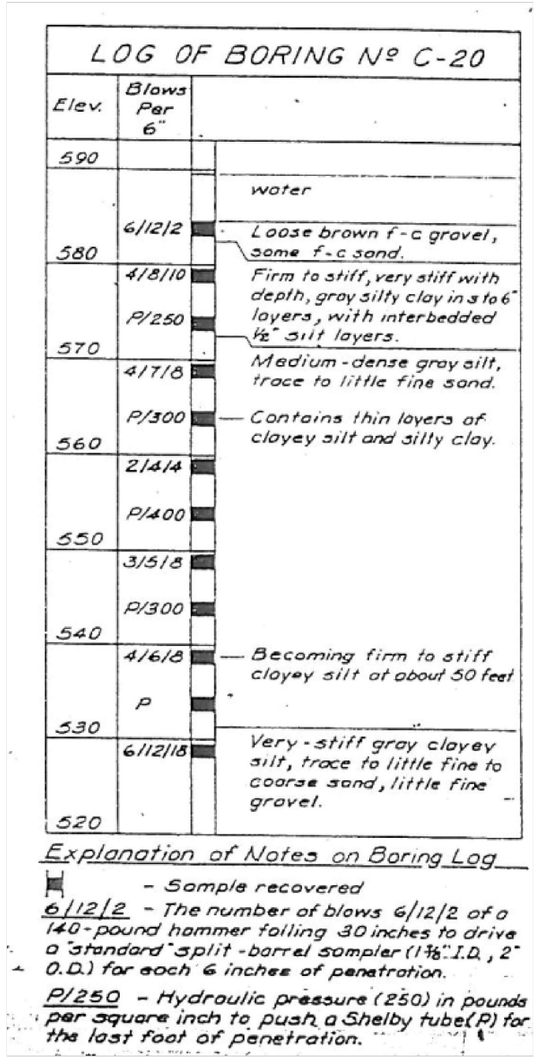

LOG OF BORING Nº C-20

Elev.	Blows Per 6"	
590		
		water
	6/12/2	Loose brown f-c gravel, some f-c sand.
580		
	4/8/10	Firm to stiff, very stiff with depth, gray silty clay in 3 to 6" layers, with interbedded ½" silt layers.
	P/250	
570		
	4/7/8	Medium-dense gray silt, trace to little fine sand.
	P/300	— Contains thin layers of clayey silt and silty clay.
560		
	2/4/4	
	P/400	
550		
	3/5/8	
	P/300	
540		
	4/6/8	— Becoming firm to stiff clayey silt at about 50 feet
	P	
530		
	6/12/18	Very-stiff gray clayey silt, trace to little fine to coarse sand, little fine gravel.
520		

Explanation of Notes on Boring Log

- Sample recovered

6/12/2 - The number of blows 6/12/2 of a 140-pound hammer falling 30 inches to drive a "standard" split-barrel sampler (1⅜" I.D., 2" O.D.) for each 6 inches of penetration.

P/250 - Hydroulic pressure (250) in pounds per square inch to push a Shelby tube (P) for the last foot of penetration.

Note: Historic Boring Log C-20 from Archive Drawing Rockside Road Bridge over Cuyahoga River Sheet No. B-90 (drawing undated)

DRAWN KJM
CHECKED LEP

STRUCTURE FOUNDATION EXPLORATION
BORING LOG C-020-0-60

CUY - OLD
ROCKSIDE ROAD

11/15

0
0

UNCONSOLIDATED-UNDRAINED TEST

ASTM D2850

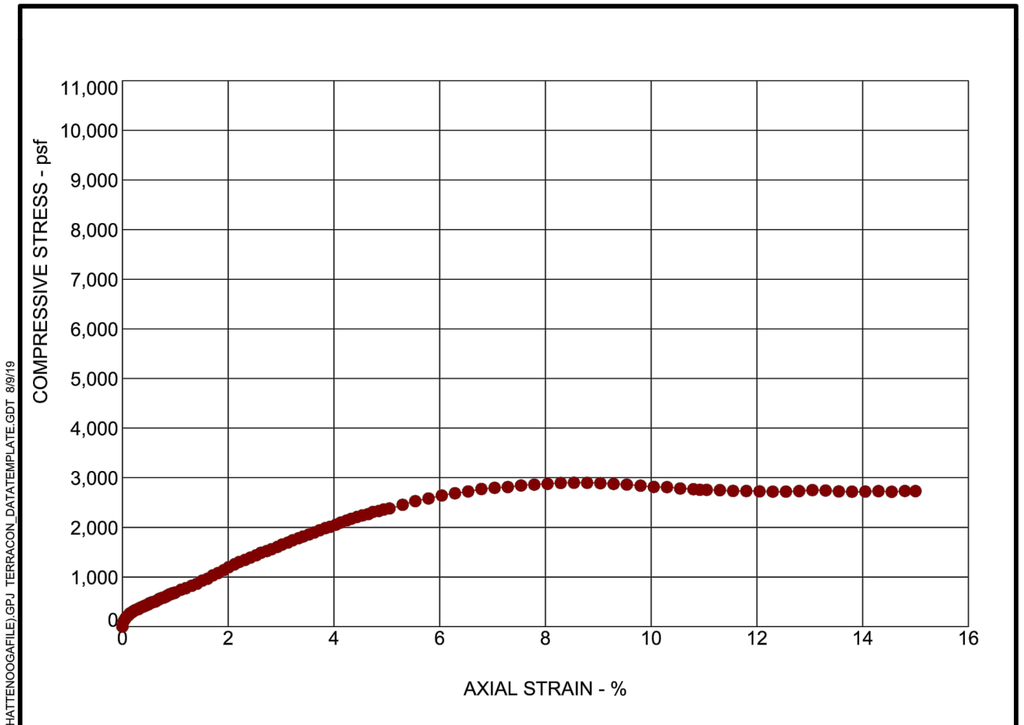

SPECIMEN FAILURE MODE	SPECIMEN TEST DATA		
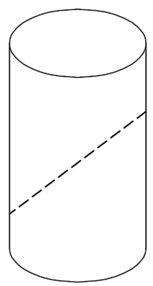 Failure Mode: Shear (dashed)	Moisture Content:	%	26.6
	Dry Density:	pcf	104.4
	Diameter:	in.	2.81
	Height:	in.	5.67
	Height / Diameter Ratio:		2.01
	Calculated Saturation:	%	116.76
	Calculated Void Ratio:		0.61
	Assumed Specific Gravity:		2.7
	Failure Strain:	%	8.54
	Compressive Strength	(tsf)	1.45
	Undrained Shear Strength:	(tsf)	0.72
	Strain Rate:	in/min	0.0560
	Cell Pressure:	psi	12.1
	Remarks: Calculated saturation of over 100% is likely the result of measurement limitations and use of an assumed specific gravity value.		

SAMPLE TYPE: Shelby Tube	SAMPLE LOCATION: B-002-0-19 @ 31 - 33 feet			
SAMPLE DESCRIPTION: GRAY SANDY SILT - A-4a (8)	LL	PL	PI	Percent < #200 Sieve
	27	21	6	99

PROJECT: Old Rockside Road Bridge Replacement

SITE: Old Rockside Road Valley View, Ohio

Terracon
12460 Plaza Dr
Parma, OH

PROJECT NUMBER: N6175053

CLIENT: Burgess & Niple, Inc. Painesville, Ohio

EXHIBIT: B-1

LABORATORY TESTS ARE NOT VALID IF SEPARATED FROM ORIGINAL REPORT. UNDRAINED-UNCONSOL. N6175053(CHATTENOOGAFILE).GPJ TERRACON_DATATEMPLATE.GDT 8/9/19

UNCONSOLIDATED-UNDRAINED TEST

ASTM D2850

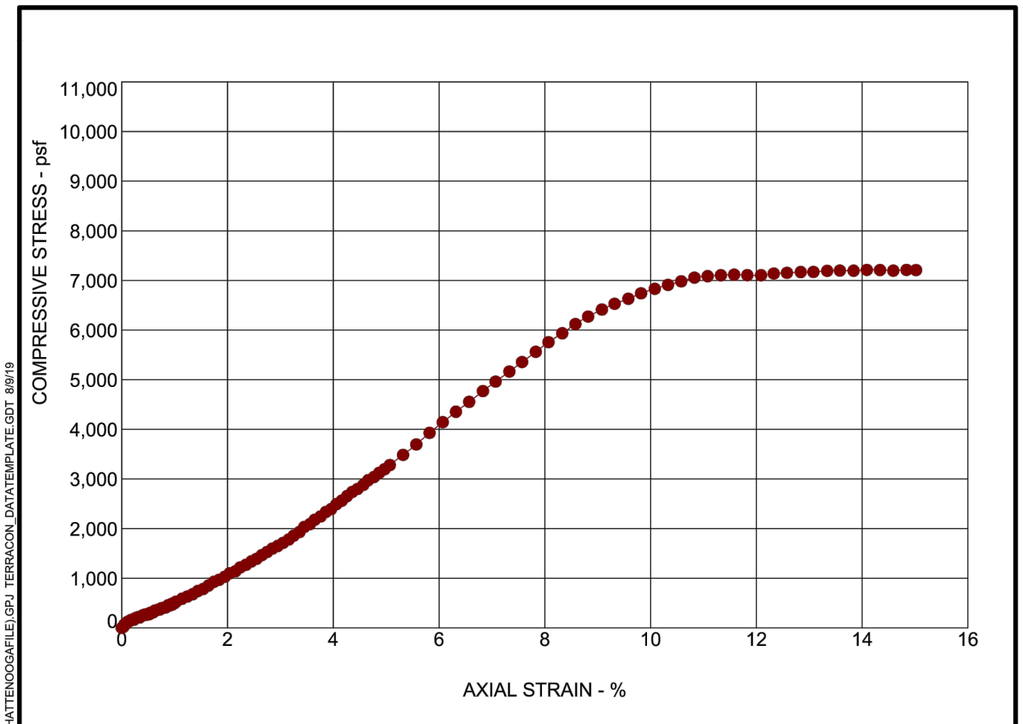

SPECIMEN FAILURE MODE	SPECIMEN TEST DATA		
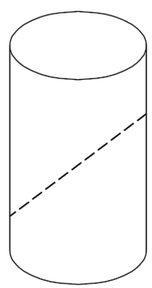 Failure Mode: Shear (dashed)	Moisture Content:	%	21.8
	Dry Density:	pcf	112.8
	Diameter:	in.	2.76
	Height:	in.	5.54
	Height / Diameter Ratio:		2.01
	Calculated Saturation:	%	118.80
	Calculated Void Ratio:		0.49
	Assumed Specific Gravity:		2.7
	Failure Strain:	%	14.09
	Compressive Strength	(tsf)	3.61
	Undrained Shear Strength:	(tsf)	1.80
	Strain Rate:	in/min	0.0560
	Cell Pressure:	psi	18.1
	Remarks: Calculated saturation of over 100% is likely the result of measurement limitations and use of an assumed specific gravity value.		

SAMPLE TYPE: Shelby Tube	SAMPLE LOCATION: B-003-0-19 @ 31 - 33 feet			
SAMPLE DESCRIPTION: GRAY SILT A-4b (8)	LL	PL	PI	Percent < #200 Sieve
	24	20	4	100

PROJECT: Old Rockside Road Bridge Replacement

SITE: Old Rockside Road Valley View, Ohio

Terracon
12460 Plaza Dr
Parma, OH

PROJECT NUMBER: N6175053

CLIENT: Burgess & Niple, Inc. Painesville, Ohio

EXHIBIT: B-2

LABORATORY TESTS ARE NOT VALID IF SEPARATED FROM ORIGINAL REPORT. UNDRAINED-UNCONSOL. N6175053(CHATTENOOGAFILE).GPJ TERRACON_DATATEMPLATE.GDT 8/9/19

DRAWN KJM | CHECKED LEP

STRUCTURE FOUNDATION EXPLORATION
LABORATORY TEST DATA

CUY - OLD
ROCKSIDE ROAD

UNCONSOLIDATED-UNDRAINED TEST

ASTM D2850

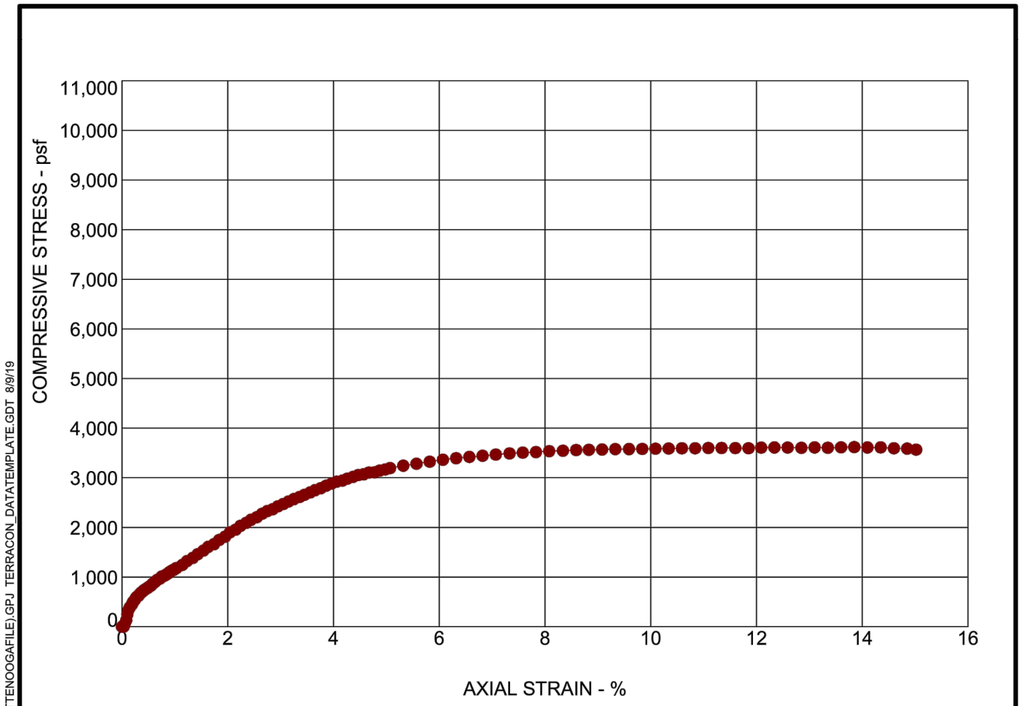

SPECIMEN FAILURE MODE	SPECIMEN TEST DATA		
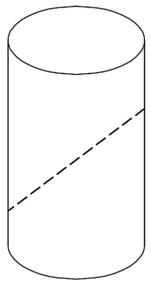 Failure Mode: Shear (dashed)	Moisture Content:	%	24.0
	Dry Density:	pcf	106.3
	Diameter:	in.	2.82
	Height:	in.	5.69
	Height / Diameter Ratio:		2.01
	Calculated Saturation:	%	110.36
	Calculated Void Ratio:		0.59
	Assumed Specific Gravity:		2.7
	Failure Strain:	%	13.85
	Compressive Strength	(tsf)	1.81
	Undrained Shear Strength:	(tsf)	0.90
	Strain Rate:	in/min	0.0560
	Cell Pressure:	psi	31.2
	Remarks: Calculated saturation of over 100% is likely the result of measurement limitations and use of an assumed specific gravity value.		

SAMPLE TYPE:	SAMPLE LOCATION: B-003-0-16 @ 58.5 feet			
SAMPLE DESCRIPTION: GRAY SILT AND CLAY A-6a (8)	LL	PL	PI	Percent < #200 Sieve
	30	19	11	94

PROJECT: Old Rockside Road Bridge Replacement

SITE: Old Rockside Road Valley View, Ohio

Terracon
12460 Plaza Dr
Parma, OH

PROJECT NUMBER: N6175053

CLIENT: Burgess & Niple, Inc. Painesville, Ohio

EXHIBIT: B-3

LABORATORY TESTS ARE NOT VALID IF SEPARATED FROM ORIGINAL REPORT. UNDRAINED-UNCONSOL. N6175053(CHATTENOOGAFILE).GPJ TERRACON_DATATEMPLATE.GDT 8/9/19

UNCONSOLIDATED-UNDRAINED TEST

ASTM D2850

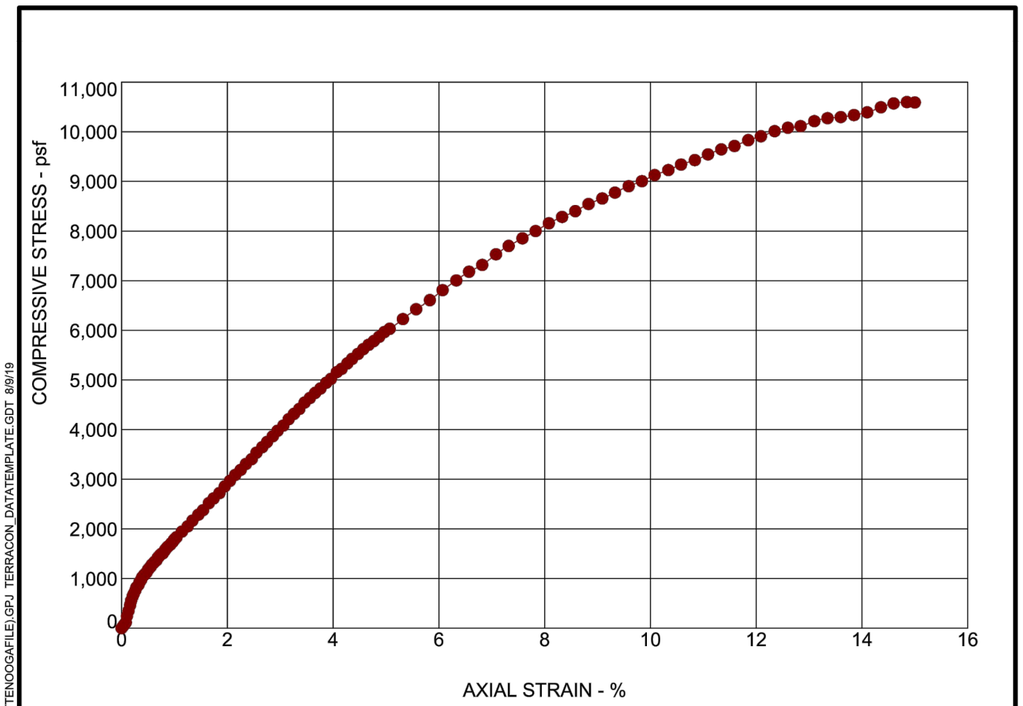

SPECIMEN FAILURE MODE	SPECIMEN TEST DATA		
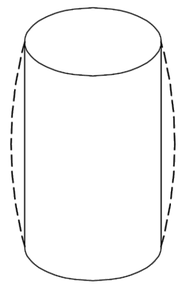 Failure Mode: Bulge (dashed)	Moisture Content:	%	16.6
	Dry Density:	pcf	119.2
	Diameter:	in.	2.85
	Height:	in.	5.69
	Height / Diameter Ratio:		1.99
	Calculated Saturation:	%	108.40
	Calculated Void Ratio:		0.41
	Assumed Specific Gravity:		2.7
	Failure Strain:	%	14.85
	Compressive Strength	(tsf)	5.30
	Undrained Shear Strength:	(tsf)	2.65
	Strain Rate:	in/min	0.0560
	Cell Pressure:	psi	42.4
	Remarks: Calculated saturation of over 100% is likely the result of measurement limitations and use of an assumed specific gravity value.		

SAMPLE TYPE:	SAMPLE LOCATION: B-003-0-16 @ 83.5 feet			
SAMPLE DESCRIPTION: GRAY SANDY SILT A-4a (8)	LL	PL	PI	Percent < #200 Sieve
	25	18	7	87

PROJECT: Old Rockside Road Bridge Replacement

SITE: Old Rockside Road Valley View, Ohio

Terracon
12460 Plaza Dr
Parma, OH

PROJECT NUMBER: N6175053

CLIENT: Burgess & Niple, Inc. Painesville, Ohio

EXHIBIT: B-4

LABORATORY TESTS ARE NOT VALID IF SEPARATED FROM ORIGINAL REPORT. UNDRAINED-UNCONSOL. N6175053(CHATTENOOGAFILE).GPJ TERRACON_DATATEMPLATE.GDT 8/9/19

DRAWN KJM | CHECKED LEP

STRUCTURE FOUNDATION EXPLORATION
LABORATORY TEST DATA

CUY - OLD ROCKSIDE ROAD

UNCONSOLIDATED-UNDRAINED TEST

ASTM D2850

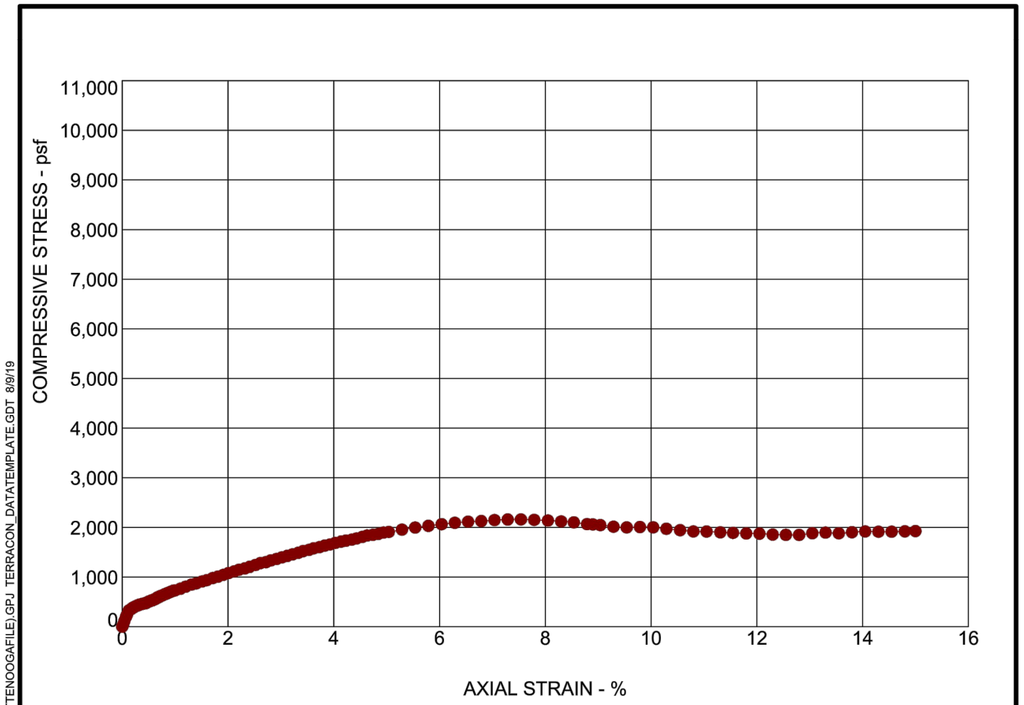

SPECIMEN FAILURE MODE	SPECIMEN TEST DATA		
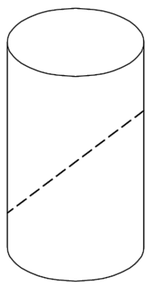 Failure Mode: Shear (dashed)	Moisture Content:	%	26.6
	Dry Density:	pcf	101.7
	Diameter:	in.	2.81
	Height:	in.	5.66
	Height / Diameter Ratio:		2.02
	Calculated Saturation:	%	109.40
	Calculated Void Ratio:		0.66
	Assumed Specific Gravity:		2.7
	Failure Strain:	%	7.54
	Compressive Strength	(tsf)	1.08
	Undrained Shear Strength:	(tsf)	0.54
	Strain Rate:	in/min	0.0560
	Cell Pressure:	psi	20.8
	Remarks: Calculated saturation of over 100% is likely the result of measurement limitations and use of an assumed specific gravity value.		

SAMPLE TYPE: Shelby Tube	SAMPLE LOCATION: B-004-0-19 @ 31 - 33 feet			
SAMPLE DESCRIPTION: GRAY SILT AND CLAY A-6a (8)	LL	PL	PI	Percent < #200 Sieve
	31	20	11	100

PROJECT: Old Rockside Road Bridge Replacement

SITE: Old Rockside Road
Valley View, Ohio

Terracon
12460 Plaza Dr
Parma, OH

PROJECT NUMBER: N6175053

CLIENT: Burgess & Niple, Inc.
Painesville, Ohio

EXHIBIT: B-5

LABORATORY TESTS ARE NOT VALID IF SEPARATED FROM ORIGINAL REPORT. UNDRAINED-UNCONSOL. N6175053(CHATTENOOGAFILE).GPJ TERRACON_DATATEMPLATE.GDT 8/9/19

UNCONSOLIDATED-UNDRAINED TEST

ASTM D2850

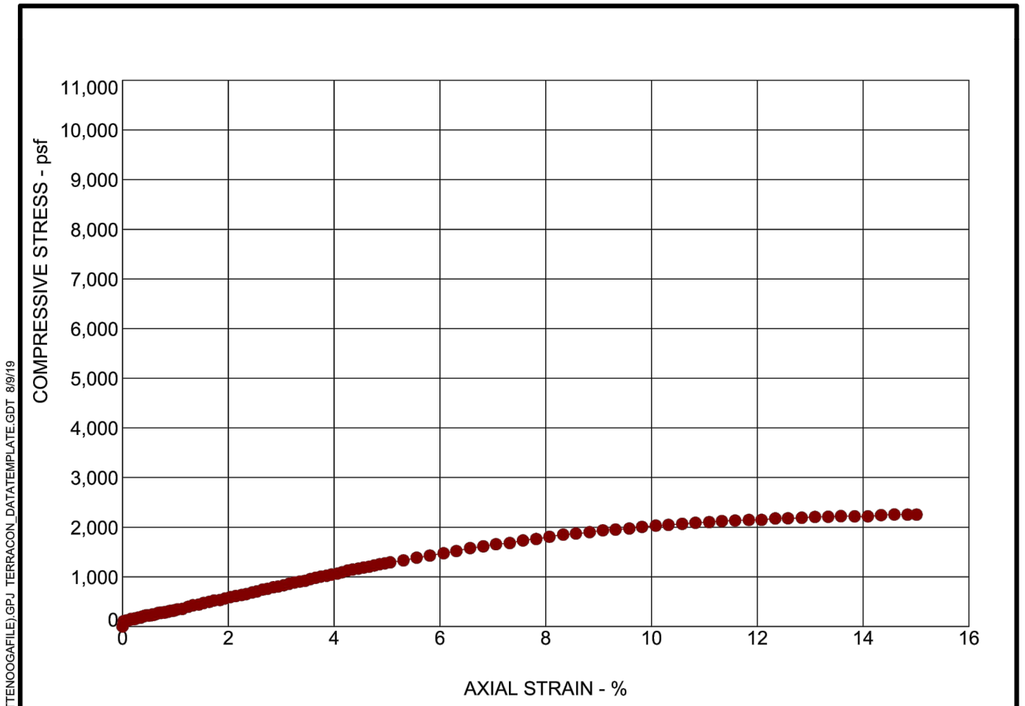

SPECIMEN FAILURE MODE	SPECIMEN TEST DATA		
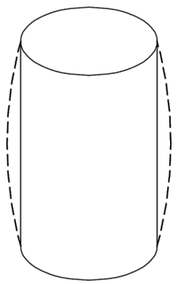 Failure Mode: Bulge (dashed)	Moisture Content:	%	24.2
	Dry Density:	pcf	106.7
	Diameter:	in.	2.80
	Height:	in.	5.55
	Height / Diameter Ratio:		1.98
	Calculated Saturation:	%	112.93
	Calculated Void Ratio:		0.58
	Assumed Specific Gravity:		2.7
	Failure Strain:	%	14.59
	Compressive Strength	(tsf)	1.13
	Undrained Shear Strength:	(tsf)	0.56
	Strain Rate:	in/min	0.0560
	Cell Pressure:	psi	25.5
	Remarks: Calculated saturation of over 100% is likely the result of measurement limitations and use of an assumed specific gravity value.		

SAMPLE TYPE: Shelby Tube	SAMPLE LOCATION: B-004-0-19 @ 41 - 43 feet			
SAMPLE DESCRIPTION: GRAY SILT A-4b (8)	LL	PL	PI	Percent < #200 Sieve
	23	20	3	100

PROJECT: Old Rockside Road Bridge Replacement

SITE: Old Rockside Road
Valley View, Ohio

Terracon
12460 Plaza Dr
Parma, OH

PROJECT NUMBER: N6175053

CLIENT: Burgess & Niple, Inc.
Painesville, Ohio

EXHIBIT: B-6

LABORATORY TESTS ARE NOT VALID IF SEPARATED FROM ORIGINAL REPORT. UNDRAINED-UNCONSOL. N6175053(CHATTENOOGAFILE).GPJ TERRACON_DATATEMPLATE.GDT 8/9/19

DRAWN KJM | CHECKED LEP

STRUCTURE FOUNDATION EXPLORATION
LABORATORY TEST DATA

CUY - OLD
ROCKSIDE ROAD

UNCONSOLIDATED-UNDRAINED TEST

ASTM D2850

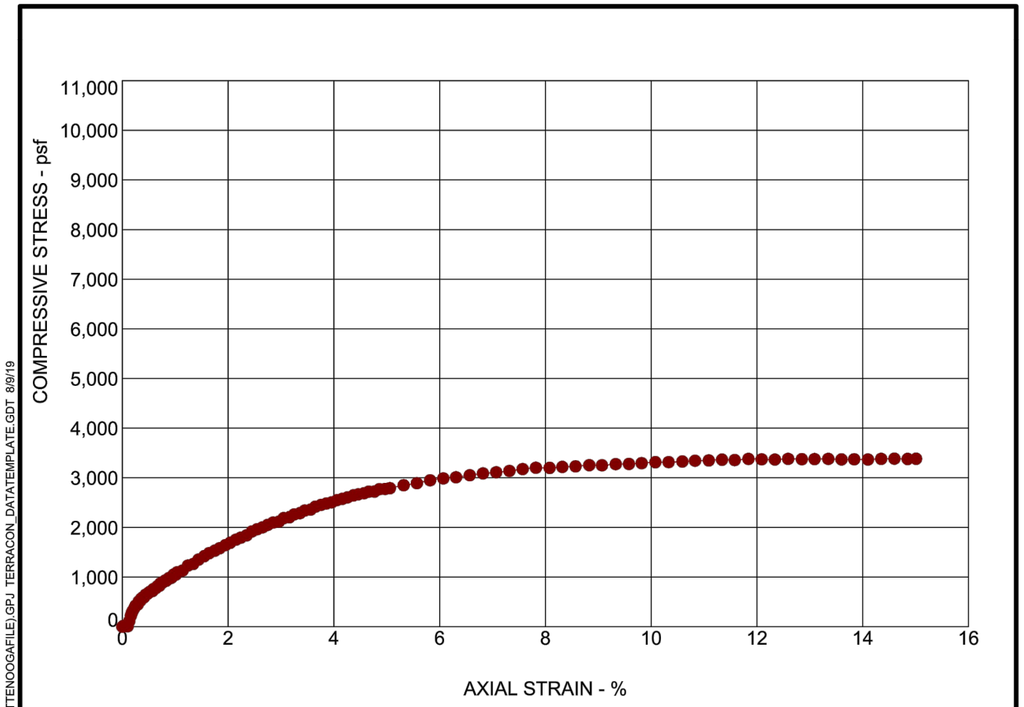

SPECIMEN FAILURE MODE	SPECIMEN TEST DATA		
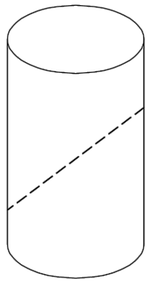 Failure Mode: Shear (dashed)	Moisture Content:	%	22.7
	Dry Density:	pcf	107.7
	Diameter:	in.	2.85
	Height:	in.	5.68
	Height / Diameter Ratio:		2.00
	Calculated Saturation:	%	108.53
	Calculated Void Ratio:		0.56
	Assumed Specific Gravity:		2.7
	Failure Strain:	%	14.60
	Compressive Strength	(tsf)	1.69
	Undrained Shear Strength:	(tsf)	0.85
	Strain Rate:	in/min	0.0560
	Cell Pressure:	psi	37.5
	Remarks: Calculated saturation of over 100% is likely the result of measurement limitations and use of an assumed specific gravity value.		

SAMPLE TYPE: Shelby Tube	SAMPLE LOCATION: B-004-0-19 @ 71 - 73 feet			
SAMPLE DESCRIPTION: GRAY SILT A-4b (8)	LL	PL	PI	Percent < #200 Sieve
	26	18	8	93

PROJECT: Old Rockside Road Bridge Replacement	Terracon 12460 Plaza Dr Parma, OH	PROJECT NUMBER: N6175053
SITE: Old Rockside Road Valley View, Ohio		CLIENT: Burgess & Niple, Inc. Painesville, Ohio
		EXHIBIT: B-7

LABORATORY TESTS ARE NOT VALID IF SEPARATED FROM ORIGINAL REPORT. UNDRAINED-UNCONSOL. N6175053\CHATTENOOGAFILE\.GPJ TERRACON_DATATEMPLATE.GDT 8/9/19

DRAWN KJM | CHECKED LEP

STRUCTURE FOUNDATION EXPLORATION
LABORATORY TEST DATA

CUY - OLD
ROCKSIDE ROAD